(12) PATENT **(11)** Application No. **AU 199923563 B2**
(19) AUSTRALIAN PATENT OFFICE **(10)** Patent No. **754001**

(54) Title
Rotary brush device and vacuum cleaner using the same

(51)[7] International Patent Classification(s)
A47L 005/30

(21) Application No: **199923563** (22) Application Date: **1999.04.01**

(30) Priority Data

(31) Number	(32) Date	(33) Country
09/055020	**1998.04.03**	**US**

(43) Publication Date : **1999.10.14**
(43) Publication Journal Date : **1999.10.14**
(44) Accepted Journal Date : **2002.10.31**

(71) Applicant(s)
Matsushita Electrical Industrial Co., Ltd.

(72) Inventor(s)
Hiroshi Nishimura; Seizo Hayashi

(74) Agent/Attorney
GRIFFITH HACK,GPO Box 1285K,MELBOURNE VIC 3001

(56) Related Art
US 3907257
US 4268769
US 1770643

AUSTRALIA

Patents Act 1990

COMPLETE SPECIFICATION

STANDARD PATENT

Applicant(s):

MATSUSHITA ELECTRIC INDUSTRIAL CO., LTD.

Invention Title:

ROTARY BRUSH DEVICE AND VACUUM CLEANER USING THE SAME.

The following statement is a full description of this invention, including the best method of performing it known to me/us:

ABSTRACT

A motor is incorporated in a cylindrical body which is a rotary brush. Rotation of a rotor of the motor, directly or via a speed reduction mechanism, drives the rotary brush. Cooling air runs through the cylindrical body so that the motor is cooled and protected. The rotary brush and an electric apparatus using the rotary brush can be downsized and easily.

ROTARY BRUSH DEVICE AND VACUUM CLEANER USING THE SAME

Field of the Invention

The present invention relates to a rotary brush device used in an electric vacuum cleaner and an electric apparatus using the same.

Background of the Invention

A rotary brush device of a conventional upright vacuum cleaner has been formed with a rotary brush which is housed in a floor nozzle and is driven by an electric blower motor for sucking dust. The motor is built in the main body of vacuum cleaner, and the motor through a belt or gears drives the rotary brush, or a dedicated motor is provided outside the rotary brush somewhere in a floor nozzle to drive the brush.

The conventional construction discussed above requires a considerably large space for the mechanism transmitting the rotating force. This has been a blocking factor for making an apparatus smaller in size and lighter in weight. This also has caused inconvenience of handling the apparatus.

Summary of the Invention

According to one aspect of the present invention there is provided a rotary brush device comprising:

a cylindrical body having two ends, at least one of a brush agitator, a thin-plate agitator and a thin-plate scraper;

AUSTRALIAN PATENT OFFICE

a motor disposed in said cylindrical body and for rotating said cylindrical body;

a speed reduction mechanism for reducing rotational speed of said motor;

wherein said motor is disposed on a first end of said cylindrical body and said speed reduction mechanism is disposed on a second end of said cylindrical body; and

an electric blower disposed outside of the cylindrical body for drawing air into said cylindrical body for cooling said motor.

According to another aspect of the present invention there is provided an electric apparatus comprising:

A sucking means, at least one rotary brush device, said rotary brush device having a cylindrical body having two ends, with a motor housed in the cylindrical body, an outer wall of the cylindrical body is provided with at least one of a brush, at thin-plate agitator, and a thin-plate scraper, the cylindrical body is provided at one end with a first opening for receiving outside air and a second opening at an opposite side of the cylindrical body, said first opening and said second opening being connected to one another through the inside of the motor, wherein said second opening is affected by an electric blower disposed outside of the cylindrical body for sucking air therein for cooling said motor.

Other aspects of the invention are recited in the claims.

Brief Description of the Drawings

Fig. 1 is a perspective view of a rotary brush device in accordance with an exemplary embodiment of the present invention.

Fig. 2 is a cross sectional top view showing an essential part of an electric apparatus incorporating a

AUSTRALIAN PATENT OFFICE

rotary brush device of the present invention.

Fig. 3 is a cross sectional top view showing an essential part of an electric apparatus incorporating a rotary brush device in accordance with other embodiment of the present invention.

Fig. 4 is a cross sectional side elevation showing an essential part of an electric apparatus incorporating a rotary brush device in accordance with other embodiment of the present invention.

Fig. 5 is a cross sectional top view showing an essential part of an electric apparatus incorporating a rotary brush device in accordance with still other embodiment of the present invention.

Fig. 6 is a cross sectional side view taken on A-A side of Fig. 2.

Fig. 7(a) is a cross sectional side view taken on B-B side of Fig. 3. (A bottom of the apparatus is on the floor.)

AUSTRALIAN PATENT OFFICE

Fig.7(b) is a cross sectional side view taken on B - B side of Fig.3. (A bottom of the apparatus is off the floor.)

Fig. 8 shows an outlook of an upright vacuum cleaner, an example of electric apparatuses.

Fig.9 is a rear view of the vacuum cleaner shown in Fig. 8.

Fig.10 is a cross sectional side view showing an essential part of the vacuum cleaner shown in Fig. 8.

Fig.11 is a bottom view of an essential part of a floor nozzle of the vacuum cleaner shown in Fig. 8.

Fig.12(a) is a cross sectional side elevation showing an electric apparatus incorporating a floor detector.

Fig.12(b) is a cross sectional side view showing the active floor detector.

Fig.12(c) is an electric circuit diagram of the floor detector.

Fig.13(a) is a cross sectional side view of an apparatus provided with a handle and a dust detector in accordance with an exemplary embodiment.

Fig.13(b) is an electric circuit diagram of the above apparatus.

Detailed Description of the Exemplary Embodiments

Exemplary embodiments of the present invention are described hereinafter with reference to the accompanying drawings. In Fig.1, cylindrical body 1 and brush 2 form a rotary brush. Bristles are transplanted in a V-shape

on the outer surface of cylindrical body 1 to form brush 2. In place of the brush, an agitator, a thin plate scraper, or the like, may be used depending on objectives or applications. Numeral 3 denotes a reduction gear bracket which is a part of speed reduction mechanism, and a motor bracket 4 holds a motor housed in cylindrical body 1. First opening 6, a ventilation hole, is provided on an edge portion of the outer wall of cylindrical body 1. Numeral 32 denotes a ventilation hole provided in motor bracket 4. The bristle arrangement of brush 2, or agitator, is not limited to the V-shape, but may be of a helical shaped or another patterns for an improved capacity of dust agitation/collection.

In Fig.2, numeral 7 denotes a rotor of the motor, stator 8 of the motor is mounted inside of motor bracket 4, and is disposed in an annular space between rotor 7 and bracket 4. Rotor shaft 9 rotates together with the rotor 7. Commutator 10 is disposed on an edge portion of rotor 7 and carbon brush 5 slidably contacts the circumference of commutator 10. Rotor 7 is powered through carbon brush 5 and commutator 10. A first bearing 11 receives the outer wall of motor bracket 4 press-fitted in its inner wall, while an outer ring of bearing 11 is press fitted into an inner wall of cylindrical body 1 at its left edge so that cylindrical body 1 is journaled at the motor end. Carbon brush 5 is mounted to part of motor bracket 4 which outwardly protrudes from cylindrical body 1 at the motor side, i.e. the motor bracket is provided outside of first bearing 11. Carbon brush 5 is mounted outside of rotational cylindrical body 1 so that wiring for power is easily provided to carbon brush 5, and so that a worn-out carbon brush could be easily replaced.

Numeral 12 denotes a third opening provided in the motor bracket 4 at the right end for taking the outside air into the motor for cooling. Numeral 13

denotes a second bearing which is press fitted to reduction gear bracket 3 and supports the right end (opposite end to the motor) of the rotor shaft with the inner ring. Numeral 14 denotes a third bearing the outer ring of which is press fitted to a portion of cylindrical body 1 (a recess on the wall opposite to motor of cylindrical body 1), while rotor shaft 9 is press fitted to the inner ring of the bearing. First gear 15 is fixed to the rotor shaft 9, and is held by and between the second bearing 13 and the third bearing 14. Second gear 16 is supported by pin 17 provided in reduction gear bracket 3, for transmitting the rotation of first gear 15 to third gear 18 formed around the inner edge of cylindrical body 1; thus cylindrical body 1 is driven at a reduced speed. Motor bearings 19 are provided at both ends of the rotor 7, the bearings 19 are held by motor bracket 4.

The structure discussed above allows cylindrical body 11 to rotate in an accurate and smooth manner with less noise and to be journaled by first bearing 11 and third bearing 14. When magnetic permeable material is used to form cylindrical body 11, efficiency of the motor is further promoted. Since heavy items, such as the motor, the reduction gear and its bracket, are placed on both ends of cylindrical body 11 in well balanced manner, cylindrical body 11 rotates with little wobble thanks to the well-balanced weight. Further, heavy items are placed at both ends, i.e. near to the bearings, so that few chances of rotational wobble are available. Detector 20 detects abnormal pressure in a sucking passage, temperature or electric current and breaks electric supply to the motor; thus the detector is expected to function as a safety device for protecting the motor or preventing unusual heat generation. For instance, when dust is caught in the brush it may lock the rotary brush, and the temperature and the current supply to the motor exceeds a normal level. The detector detects these abnormal states so that the motor is protected and overheating is avoided.

Sucked in air is utilised to cool down the motor (detailed later). However, when sucking power is lowered because a filter provided in a dust chamber (48 in Fig. 10) is clogged or the like, the detector detects a lowered pressure in the sucking passage. Since the lowered pressure causes insufficient cooling of the motor, the detector can shut the current-supply to the motor to avoid overheat. Outside-air taking room 21 introduces outside-air to first opening 6 provided on cylindrical body 1. Floor nozzle 22 incorporates the rotary brush therein. A first end of hose 23 is coupled to sucking mouth 38 provided at rear portion of floor nozzle 22. A second end of hose 23 leads to dust chamber 48 and electric blower 43, both are situated in the cleaner body that is disposed behind the floor nozzle (Ref. Fig. 10). Partition 27 is protrusively provided in floor nozzle 22 so that partition 27 surrounds both ends of cylindrical body 1. Partition 27 separates a sucking chamber 28, outside-air taking room 28 where first opening 6 is situated and a second opening 32 provided on the motor bracket. Sucking chamber 28 is therefore an intake chamber. Chamber 28 is operated by the sucking power of the electric blower. Partition 27 has communication hole 27a on second opening 32 side, and the sucking operation is obtained through hole 27a, which aims to cool the motor by sucking outside-air through outside-air taking room 21, first opening 6, cylindrical body 1, motor bracket 4 and second opening 32.

The accompanying drawings in accordance with this exemplary embodiment shows two pieces of hose 23. When only one hose 23 is used, communication hole 27a can communicate sucking chamber 28 so that sucking power directly works through second opening 32. Therefore, the motor can be cooled down more efficiently. In this case, sucking mouth 38 is placed closely to communication hole 27a so that mouth 38 can get strong sucking power. In this case, ie. with one hose 23, when hose 23 is placed opposite to hole "27a", air

AUSTRALIAN PATENT OFFICE

sucked through second opening 32 and communication hole "27a" efficiently transfers the dust collected by brush 2 and moved in sucking chamber 28 laterally into hose 23. The placement of hose 23 opposite to communication hole "27a" arranges sucking mouth 38 and first opening 6 on the same side of floor nozzle 22 with regard to lateral direction. The rotary brush is placed in sucking chamber 28, and opening 45 is provided on the bottom of nozzle 22 corresponding to the lower portion of the rotary brush so that the rotary brush faces the floor side.

Fig. 3 illustrates a more compact structure where carbon brush 5 is integrated into cylindrical body 1. This structure allows floor nozzle 22 to utilize its width more effectively, or to be smaller in size. Fig. 3 also illustrates that fin 24 is provided on rotor shaft 9, fin 25 is provided on the inner wall of cylindrical body 11, and fin 26 is protruded on a side wall of cylindrical body 1. These arrangements eliminates the speed reduction mechanism and realizes direct driving as well as blows air inside the motor in the cylindrical body 1 as wind creating means to cool the motor. Each fin can be independently used or combined with each other depending on the cooling effect.

Fig. 4 illustrates that manual reset type thermo-protector 29 functions as a detector. It has heat-sensitive section 30 and manual reset button 31. In an operation, once a temperature rises abnormally, the apparatus stops working, and this manual reset button 31 prevents the apparatus from automatically starting again when the temperature lowers naturally. The apparatus can be started again by operating the manual reset button after identifying the abnormality.

Fig.5 illustrates a rotary brush device incorporating an outer rotor

motor. The major point of difference as compared to Fig.3 includes; rotor 33 comprising a magnet is fitted to inner wall of cylindrical body 1, stator 34 is fixed to motor shaft 35 of which both ends are held and fixed by floor nozzle 22, cylindrical body 1 at the left end is journaled by the outer ring of first bearing 11 which is press fitted in the inner ring with outer wall of stator bracket 36, while at the right end of cylindrical body 1 is journaled with its side wall by bearing 37. Sucking intake 38 for hose 23 to suck the air from sucking chamber 28 of floor nozzle 22. In the present exemplary embodiment, hose 23 has been provided for two. However, there may be one hose 23 only, in which case only one sucking intake may be provided at one end.

In Fig.6, outside-air intake 39 is provided on the top portion of floor nozzle 22. The portion where outside-air intake 39 is placed corresponds to space F (ref. Fig. 2) of outside-air taking room 21 separated by partition 27 from sucking chamber 28. While second opening 32 faces space "E" separated from sucking chamber 28 which is placed opposite to outside-air intake 39. As shown in Fig. 7a, partition 27 with regard to space "E" has communication hole "27a" leading to sucking chamber 28. Therefore, when electric blower 43 exerts its sucking power to sucking chamber 28, sucking power is effected to communication hole "27a", second opening 32, inside of cylindrical body 1, first opening 21 and space "F" sequentially, thereby taking outside-air from outside-air intake 39. This outside-air taken inside cools the motor. In Fig. 7(a), floor 24 is to be cleaned. In Fig.7(b), recess 40 is provided in the bottom of floor nozzle 22, opening 41 is provided in recess 40. Opening 41 is connected through with space "E" and sucking chamber 28. Consequently, the sucking power of sucking chamber 28 works to space "E", thereby producing airflow indicated by the arrow mark. As a result, motor can be cooled as discussed previously. At the same

time, the dust on the floor which recess 40 faces also can be sucked to sucking chamber 28 side. Outside-air intake 39 is provided on the upper face of the floor nozzle so that dust collected by the rotary brush can be restrained from sucking. As a result, the motor can be cooled with cooling air excluding the dust. In Fig. 8 and Fig. 9, vacuum cleaner body "G" incorporates dust chamber 48 and blower 43, and the lower part of the body is mounted to the rear portion of floor nozzle 22 so that body "G" can be arbitrarily slanted.

In Fig.10, numeral 43 denotes an electric blower for sucking the air, dust bag 44 is provided within dust chamber 48, sucking mouth 45 is provided on the bottom of nozzle 22, rotary brush 46 is provided within nozzle 22. The floor nozzle and the rotary brush shown in Fig. 1 though Fig. 7 are employed. In Fig.11, rotary brush "46a" has bristles transplanted in a V-shape. Brushes 47 are fixedly mounted at both ends of the sucking mouth 45, and brushes 47 have bristles planted with a certain orientation for picking up lint and the like.

In the above exemplary embodiments the rotary brush is used for only one. It is of course possible to form a rotary brush device employing a plurality of rotary brushes.

Fig.12(a) includes rotary brush 46 discussed above, and an electric apparatus 49 having a pair of floor rollers 54 in the front and the rear sections respectively incorporating an invented rotary brush device. Floor contact roller 50 is provided at the bottom end of actuator 52 that is urged down by a spring 51. As a result of detection of the floor, floor contact roller 50 is lifted up to turn switch 53, situated in the OFF position, to the ON position which activates a motor built in a rotary brush device. Fig.12(b) illustrates a state where carpet 55 placed on floor 42 is detected and the switch 53 is turned ON. Fig.12(c) is an

electrical circuit including power source 57, detection switch 53, motor 56 built in the rotary brush device, and variable resistor 58 for controlling the rotation of the motor which is to be discussed later. An electric vacuum cleaner for floor carpet having the construction discussed above starts operation when floor contact roller 50 is pushed up by carpet 55.

In Fig.13(a), handle 59 is tiltably attached to floor nozzle 22; when it is stood upright, switch 60 is turned OFF to break electric supply to the rotary brush device. Controller 61 is provided on the handle 59, and controls a rotation speed of rotary brush 46 through the above described variable resistor 58. Filter 62 is provided in dust chamber 48 for capturing the dusts stirred by rotary brush 46. Dust detector 63 comprises light-emitting element and light-sensing element, etc. and detects quantity of dusts being sucked into dust chamber 48. The dust detector sense the shift of output from the light-sensing element. The rotation speed of rotary brush 46 is varied in accordance with the dust quantity. Fig. 13(b) illustrates the electrical circuit of detector 63; where, phase controller 64 controls the rotation speed of the motor in accordance with result of the above described dust sensing. When controller 61 selects a rotational speed depending on the dust sensing, phase controller 64 follows the control process discussed above. In addition to this, high, mid, and low speeds are prepared so that users can arbitrarily select the rotational speed among them. This structure allows the vacuum cleaner to be handled with ease and work efficiently in terms of power consumption.

It is to be understood that, if any prior art publication is referred to herein, such reference does not constitute an admission that the publication forms a part of the common general knowledge in the art, in Australia or

AUSTRALIAN PATENT OFFICE

in any other country.

In the claims which follow and in the description of the invention, except where the context requires otherwise due to express language or necessary implication, the word "comprising" is used in the sense of "including", i.e. the features specified may be associated with further features in various embodiments of the invention.

\\melb_files\home$\KarraR\Keep\speci\23563.99.speci.doc

8 JUN 2001

AUSTRALIAN PATENT OFFICE

THE CLAIMS DEFINING THE INVENTION ARE AS FOLLOWS:

1. A rotary brush device comprising:

a cylindrical body having two ends, at least one of a brush agitator, a thin-plate agitator and a thin-plate scraper;

a motor disposed in said cylindrical body and for rotating said cylindrical body;

a speed reduction mechanism for reducing rotational speed of said motor;

wherein said motor is disposed on a first end of said cylindrical body and said speed reduction mechanism is disposed on a second end of said cylindrical body; and

an electric blower disposed outside of the cylindrical body for drawing air into said cylindrical body for cooling said motor.

2. The rotary brush device of claim 1 further comprising:

said motor having a rotor;

a commutator provided at one side of said rotor; and

a carbon brush slidably contacts said commutator provided outside said cylindrical body.

3. The rotary brush device of claim 1 further comprising:

said motor having a rotor;

a commutator provided at one side of said rotor; and

a carbon brush slidably contacts said commutator provided inside said cylindrical body.

4. The rotary brush device of claim 3 wherein said first end of the cylindrical body is journaled by a shaft of the rotor and said second end of the cylindrical body is engaged, via said speed reduction mechanism, with the shaft

AUSTRALIAN PATENT OFFICE

of the rotor.

5. The rotary brush device of claim 4 wherein the first end of the cylindrical body is supported by an outer ring of a first bearing, whose inner ring is press fitted with an outer wall of a motor bracket, and wherein at the second end of said cylindrical body, the rotor shaft is journaled by an inner ring of a second bearing, and an outer ring of said second bearing is press fitted into a speed reduction gear bracket.

6. The rotary brush device of claim 5 wherein the speed reduction mechanism further comprises:

a first gear fixed to the rotor shaft;

a second gear rotatably engaged with the first gear;

a third gear disposed on an inner wall of said cylindrical body and the second gear is placed between the first and third gears; and

the speed reduction gear bracket supporting the second bearing and the second gear,

said rotary brush device further comprises a third bearing contacting said cylindrical body,

wherein the first gear is held and sandwiched by an inner ring of the third bearing and the inner ring of the second bearing.

7. The rotary brush device of claim 1 wherein the motor has a stator, a motor bracket supports the motor disposed in the cylindrical body, and an annular space between an outer wall of the motor bracket, which holds said stator, and an inner wall of said cylindrical body are minimized to allow said cylindrical body to spin.

8. The rotary brush device of claim 7 wherein said cylindrical body is of a magnetic permeable material.

AUSTRALIAN PATENT OFFICE

9. A rotary brush device comprising:

a sucking means, a cylindrical body with a motor housed in the cylindrical body, an outer wall of the cylindrical body having two ends is provided with at least one of a brush, a thin-plate agitator, and a thin-plate scraper, the cylindrical body is provided at one end with a first opening for receiving outside air and a second opening at an opposite side of the cylindrical body, said second opening is provided near where sucking power from the outside of said cylindrical body is exerted in order to flow the outside air from said first opening to said second opening through the inside of said motor, and a partition protrusively surrounding both ends of said cylindrical body.

10. The rotary brush device of claim 9 wherein the motor comprises a rotor and a stator provided around an outer wall of the rotor, and a rotor shaft extends through the rotor and is coupled with the cylindrical body by direct connection.

11. The rotary brush device of claim 9 wherein a motor bracket is provided with a third opening, the third opening is connected with the first opening and the second opening.

12. The rotary brush device of claim 9 wherein wind creating means is provided within the cylindrical body.

13. The rotary brush device of claim 12 wherein the wind creating means is formed by a fin provided on at least one of a rotor shaft, an inner wall surface of the cylindrical body and a side wall surface of the cylindrical body.

14. The rotary brush device of claim 9 wherein the first opening is provided in the cylindrical body at a side

AUSTRALIAN PATENT OFFICE

spaced from the motor, and the second opening is provided near an opposite side of the cylindrical body at which is located the motor.

15. The rotary brush device of claim 15 further comprising a rotary brush, and the second opening is provided in a direction perpendicular to an axis of the rotary brush.

16. The rotary brush device of claim 9 further comprising a detector sensing either pressure or temperature, the detector is provided adjacent the motor, and a power supply to the motor is controlled in accordance with the detector.

17. The rotary brush device of claim 9 further comprising a detector sensing electric current flowing in the motor, and a power supply to the motor is controlled in accordance with the detector.

18. The rotary brush device of claim 9 wherein one of the agitator and the scraper is provided on the outer wall of the cylindrical body and having bristles in one of a helical pattern and a V-shape pattern.

19. An electric apparatus comprising:

a sucking means, at least one rotary brush device, said rotary brush device having a cylindrical body having two ends, with a motor housed in the cylindrical body, an outer wall of the cylindrical body is provided with at least one of a brush, a thin-plate agitator, and a thin-plate scraper, the cylindrical body is provided at one end with a first opening for receiving outside air and a second opening at an opposite side of the cylindrical body, said first opening and said second opening being connected to one another through the inside of the motor, wherein said second opening is affected by an electric blower

AUSTRALIAN PATENT OFFICE

disposed outside of the cylindrical body for sucking air therein for cooling said motor.

20. An electric apparatus of claim 19 further comprising:

a detector for detecting one of a pressure and a temperature is provided in a place connected through with inside of the motor, and a power supply to the motor is controlled in accordance with a result of detection made by the detector, and

a manual reset thermo-protector as a detector for detecting a temperature, and a temperature detecting part of the detector is disposed at a motor side of the apparatus and a reset button of the detector is disposed on an outer face of the apparatus.

21. An electric apparatus of claim 19 further comprising: a floor nozzle having a sucking chamber connected with an electric blower, and the floor nozzle is provided with a downward facing opening, wherein the sucking chamber is provided with the rotary brush device.

22. An electric apparatus comprising: an electric blower for air intake, a floor nozzle provided with a downwardly facing opening, said floor nozzle having an sucking chamber connected with said electric blower, a rotary brush having a cylindrical body with a motor housed in the cylindrical body, an outer wall of the cylindrical body is provided with at least one of a brush, a thin-plate agitator, and a thin-plate scraper, the cylindrical body is provided at one end with a first opening for receiving outside air and a second opening at an opposite side of the cylindrical body, said first opening and said second opening being connected to one anther through the inside of the motor.

23. The electric apparatus of claim 22 wherein the

AUSTRALIAN PATENT OFFICE

second opening is connected with the sucking chamber.

24. The electric apparatus of claim 23 wherein the outside-air intake is provided at a top surface of the floor nozzle.

25. The electric apparatus of claim 23 wherein the electric blower and the sucking chamber are connected by at least one hose.

26. The electric apparatus of claim 22 wherein the sucking chamber has an intake mouth and the second opening is disposed near the intake mouth, the sucking chamber connects the intake mouth and the electric blower.

27. The electric apparatus of claim 22 wherein the second opening is disposed opposite to an intake mouth that connects the electric blower with the sucking chamber so that motor cooling-air discharged from the second opening travels around the rotary brush.

28. The electric apparatus of claim 22 wherein the floor nozzle has opening at a bottom thereof, said opening connected with the second opening so that said opening is connected with the sucking chamber.

29. The electric apparatus of claim 22 wherein a detector for detecting a pressure is provided, and a power supply to the motor is controlled in accordance with the pressure detected by said detector.

30. The electric apparatus of claim 21 wherein a second brush is provided at a bottom of the floor nozzle between a first rotary brush and respective side ends of the floor nozzle.

31. An electric apparatus comprising: an electric

AUSTRALIAN PATENT OFFICE

blower for air intake, a dust chamber for capturing dust, a floor nozzle provided with a sucking chamber having a downwardly facing opening, an intake mouth provided at a wall of said sucking chamber and connected by a hose with said electric blower, and a rotary brush device having a cylindrical body, with a motor housed in the cylindrical body, an outer wall of the cylindrical body is provided with at least one of a brush, a thin-plate agitator, and a thin-plate scraper, the cylindrical body is provided at one end with a first opening for receiving outside air and a second opening at an opposite side of the cylindrical body, said first opening and said second opening being connected to one another through the inside of the motor and disposed in said sucking chamber;

wherein an outside-air intake connected with said first opening is provided at a top part of said floor nozzle, and said intake is disposed on a same side as said first opening in a longitudinal direction of said floor nozzle.

32. An electric apparatus comprising: a pair of front and rear rollers, a floor detector for detecting a type of floor over which the electric apparatus is rolled, a switch operating by engagement with said floor detector, and a rotary brush device having a cylindrical body with a motor housed in the cylindrical body, an outer wall of the cylindrical body is provided with at least one of a brush, a thin-plate agitator, and a thin-plate scraper, the cylindrical body is provided at one end with a first opening for receiving outside air and a second opening at an opposite side of the cylindrical body, said first opening and said second opening being connected to one another through the inside of the motor;

wherein the rotary brush device is operated by operation of the switch.

33. An electric apparatus of claim 19 further

AUSTRALIAN PATENT OFFICE

comprising: a floor nozzle which incorporates the rotary brush device and has a sucking chamber with a downwardly facing opening, an electric blower for air intake, a dust chamber for capturing dust, and a handle tiltably attached to said floor nozzle;

wherein rotation of the cylindrical body of said rotary brush device is halted when said handle is positioned substantially upright.

34. The electric apparatus of claim 33 wherein a controller is provided on a part of the handle for controlling rotation of the cylindrical body of rotary bush device.

35. An electric apparatus of claim 19 further comprising: a floor nozzle having disposed therein the rotary brush device, the floor nozzle having a sucking chamber with a downwardly facing opening, an electric blower for air intake, a dust chamber for capturing dust, and a dust detector provided at a part of an air intake path connecting said sucking chamber and the electric blower;

wherein rotation of the cylindrical body of the rotary brush device is controlled in accordance with an output of said dust detector.

36. The rotary brush device of claim 2 wherein a first end of the cylindrical body is journaled by a shaft of the rotor and a second end of the cylindrical body is engaged, via said speed reduction mechanism, with the shaft of the rotor.

37. The rotary brush device of claim 1 wherein a first end of the cylindrical body is journaled by a shaft of the rotor and a second end of the cylindrical body is engaged, via said speed reduction mechanism, with the shaft of the rotor.

AUSTRALIAN PATENT OFFICE

38. The rotary brush device of claim 1 further comprising a detector sensing either pressure or temperature, the detector is provided adjacent the motor, and a power supply to the motor is controlled in accordance with the detector.

39. The rotary brush device of claim 1 further comprising a detector sensing electric current flowing in the motor, and a power supply to the motor is controlled in accordance with the detector.

40. The rotary brush device of claim 1 wherein one of the agitator and the scrapper is provided on an outer wall of the cylindrical body and having bristles in one of a helical pattern and a V-shaped pattern.

41. An electric apparatus comprising: at least one rotary brush device having a cylindrical body having two ends, at least one of a brush agitator, a thin-plate agitator and a thin-plate scraper;

a motor disposed in said cylindrical body and for rotating said cylindrical body;

a speed reduction mechanism for reducing rotational speed of said motor;

wherein said motor is disposed on a first end of said cylindrical body and said speed reduction mechanism is disposed on a second end of said cylindrical body; and

wherein outside-air is drawn into said cylindrical body by an electric blower disposed outside of said cylindrical body for sucking air therein for cooling said motor.

42. An electric apparatus of claim 41 further comprising: a manual reset thermo-protector is as a detector for detecting a temperature, and a temperature detecting part of the detector is disposed at a motor side

AUSTRALIAN PATENT OFFICE

of the apparatus and a reset button of the detector is disposed on an outer face of the apparatus.

43. An electric apparatus comprising: a floor nozzle having a sucking chamber connected with an electric blower, and the floor nozzle is provided with a downward facing opening, wherein the sucking chamber is provided with a rotary brush device having a cylindrical body having two ends, at least one of a brush agitator, a thin-plate agitator and a thin-plate scraper;

a motor disposed in said cylindrical body and for rotating said cylindrical body;

a speed reduction mechanism for reducing rotational speed of said motor;

wherein said motor is disposed on a first end of said cylindrical body and said speed reduction mechanism is disposed on a second end of said cylindrical body; and

wherein outside-air is drawn into said cylindrical body by an electric blower disposed outside said cylindrical body for sucking air therein for cooling said motor.

44. The electric apparatus of claim 22 wherein the outside-air intake is provided at a top surface of the floor nozzle.

45. The electric apparatus of claim 22 wherein the electric blower and the sucking chamber are connected by at least one hose.

46. The electric apparatus of claim 21 wherein a detector for detecting a pressure is provided, and a power supply to the motor is controlled in accordance with the pressure detected by said detector.

47. An electric apparatus comprising: a pair of front and rear rollers, a floor detector for detecting a type of

AUSTRALIAN PATENT OFFICE

floor over which the electric apparatus is rolled, a switch operated by engagement with said floor detector, and a rotary brush device having a cylindrical body having two ends, at least one of a brush agitator, a thin-plate agitator and a thin-plate scraper;

a motor disposed in said cylindrical body and for rotating said cylindrical body;

a speed reduction mechanism for reducing rotational speed of said motor;

wherein said motor is disposed on a first end of said cylindrical body and said speed reduction mechanism is disposed on a second end of said cylindrical body;

wherein the rotary brush device is operated by operation of the switch; and

wherein said motor, said cylindrical body and said speed reduction mechanism are disposed around a continuous straight motor shaft concentrically.

48. An electric apparatus comprising: a floor nozzle which incorporates a rotary brush device having a cylindrical body having two ends, at least one of a brush agitator, a thin-plate agitator and a thin-plate scraper;

a motor disposed in said cylindrical body and for rotating said cylindrical body;

a speed reduction mechanism for reducing rotational speed of said motor;

wherein said motor is disposed on a first end of said cylindrical body and said speed reduction mechanism is disposed on a second end of said cylindrical body;

wherein said electric apparatus has a sucking chamber with a downwardly facing opening, an electric blower for air intake, a dust chamber for capturing dust, and a handle tiltably attached to said floor nozzle;

wherein rotation of the cylindrical body of said rotary brush device is halted when said handle is positioned substantially upright; and

wherein outside-air is drawn into said

AUSTRALIAN PATENT OFFICE

cylindrical body by an electric motor disposed outside of said cylindrical body for sucking air therein for cooling said motor.

49. An electric apparatus comprising: a floor nozzle having disposed therein a rotary brush device having a cylindrical body having two ends, at least one of a brush agitator, a thin-plate agitator and a thin-plate scraper;

a motor disposed in said cylindrical body and for rotating said cylindrical body;

a speed reduction mechanism for reducing rotational speed of said motor;

wherein said motor is disposed on a first end of said cylindrical body and said speed reduction mechanism is disposed on a second end of said cylindrical body,

the floor nozzle having a sucking chamber with a downwardly facing opening, an electric blower for air intake, a dust chamber for capturing dust, and a dust detector provided at a part of an air intake path connecting said sucking chamber and the electric blower;

wherein rotation of the cylindrical body of the rotary brush device is controlled in accordance with an output of said dust detector; and

wherein said motor, said cylindrical body and said speed reduction mechanism are disposed around a continuous straight motor shaft concentrically.

50. The rotary brush device of claim 9 wherein the motor comprises a rotor and a stator provided around an outer wall of the rotor, and a rotor shaft extends through the rotor and is coupled with the cylindrical body by a speed reduction mechanism.

51. The rotary brush device of claim 9 wherein the motor comprises a stator and a rotor provided rotatable around an outer wall of the stator, and the rotor is engaged with the cylindrical body by direct connection.

AUSTRALIAN PATENT OFFICE

52. The rotary brush device of claim 1, wherein said speed reduction mechanism is supported with a bearing disposed concentrically around said motor shaft.

53. A rotary brush device comprising:

a housing;

a cylindrical body having first and second ends and at least one of a brush agitator, a thin-plate agitator and a thin-plate scraper, said cylindrical body disposed in said housing;

a motor disposed in and at said first end of said cylindrical body and for rotating said cylindrical body;

a speed reduction mechanism for reducing rotational speed of said motor and disposed at said second end of said cylindrical body;

a partition extending in said housing and having a communication opening therein; and

an electric blower disposed outside of said cylindrical body for drawing air into said cylindrical body through said communication opening of said partition for cooling said motor.

54. The rotary brush device of claim 53 further comprising an outside-air-intake opening in said housing through which air is drawn into said housing.

55. A rotary brush device comprising:

a cylindrical body having a first end, a second end, and having at least one of a brush agitator, a thin-plate agitator and a thin-plate scraper;

a motor disposed in said cylindrical body at said first end and for rotating said cylindrical body;

a motor bearing surrounding said motor, and said motor bearing attached to and between said motor and said cylindrical body; and

a speed reduction mechanism disposed on said

AUSTRALIAN PATENT OFFICE

second end of said cylindrical body;

wherein said first end of said cylindrical body is rotatably supported with said motor bearing.

56. The rotary brush device of claim 55 further comprising:

a commutator provided at one side of said motor; and

a carbon brush slideably contacting on said commutator provided outside of said cylindrical body.

57. The rotary brush device of claim 55, further comprising:

a commutator provided at one side of said motor; and

a carbon brush slideably contacting on said commutator provided inside of said cylindrical body.

58. The rotary brush device of claim 55 wherein the first end of the cylindrical body is journaled by a shaft of the motor and said second end thereof is engaged via said speed reduction mechanism with the shaft of the motor.

59. The rotary brush device of claim 58 wherein the first end of the cylindrical body is supported by an outer ring of a first bearing, into which an inner ring of an outer wall of a motor bracket is press fitted, and wherein at the second end of said cylindrical body, the motor shaft is journaled by an inner ring of a second bearing, of which an outer ring is press fitted into a speed reduction gear bracket.

60. The rotary brush device of claim 59 wherein the speed reduction mechanism further comprising:

a first gear fixed to the rotor shaft;

a second gear rotatably engaged with the first gear;

AUSTRALIAN PATENT OFFICE

a third gear disposed on an inner wall of said cylindrical body and the second gear is place between the first and third gear; and

the speed reduction gear bracket supporting the second bearing and the second gear,

wherein said rotary brush further comprises a third bearing directly journaling said cylindrical body,

wherein the first gear is held and sandwiched by an inner ring of the third bearing bracket and the inner ring of the second bearing.

61. The rotary brush device of claim 56 wherein the first end of the cylindrical body is journaled by a shaft of the rotor and said second end thereof is engaged via said speed reduction mechanism with the shaft of the rotor.

62. The rotary brush device of claim 57 wherein the first end of the cylindrical body is journaled by a shaft of the rotor and a second end thereof is engaged via a speed reduction mechanism with the shaft of the rotor.

63. An electric apparatus comprising the rotary brush device of claim 55 wherein a manual reset thermo-protector is provided as a detector for detecting a temperature, and temperature detecting part of the detector is disposed on the motor side while a reset button is disposed on an outer face of the apparatus.

64. An electric apparatus comprising a pair of running rollers provided respectively at a front and a rear floor detector for detecting a floor, a switch which operates in engagement with said floor detector, and the rotary brush device recited in claim 55 wherein the cylindrical body is rotated in accordance with the kind of floor.

AUSTRALIAN PATENT OFFICE

65. An rotary brush device substantially as herein described with reference to the accompanying drawings.

66. An electric apparatus substantially as herein described with reference to the accompanying drawings.

Dated this 31st day of January 2002
MATSUSHITA ELECTRIC INDUSTRIAL CO., LTD.
By their Patent Attorneys
GRIFFITH HACK
Fellows Institute of Patent and
Trade Mark Attorneys of Australia

AUSTRALIAN PATENT OFFICE

Fig. 1

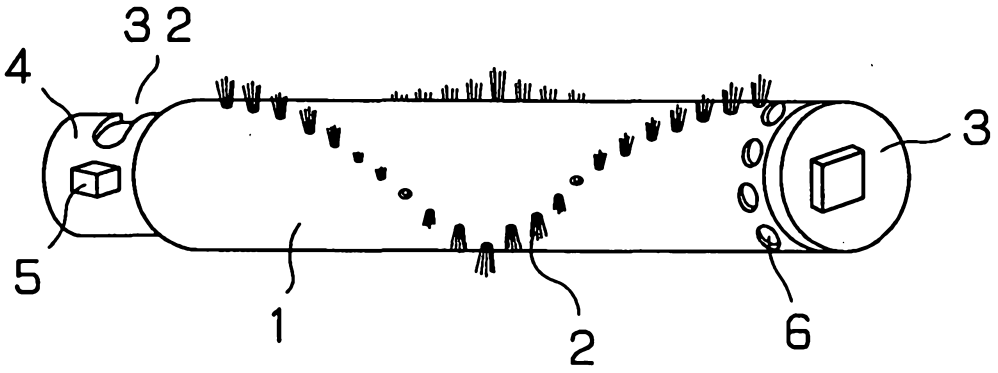

Fig. 2

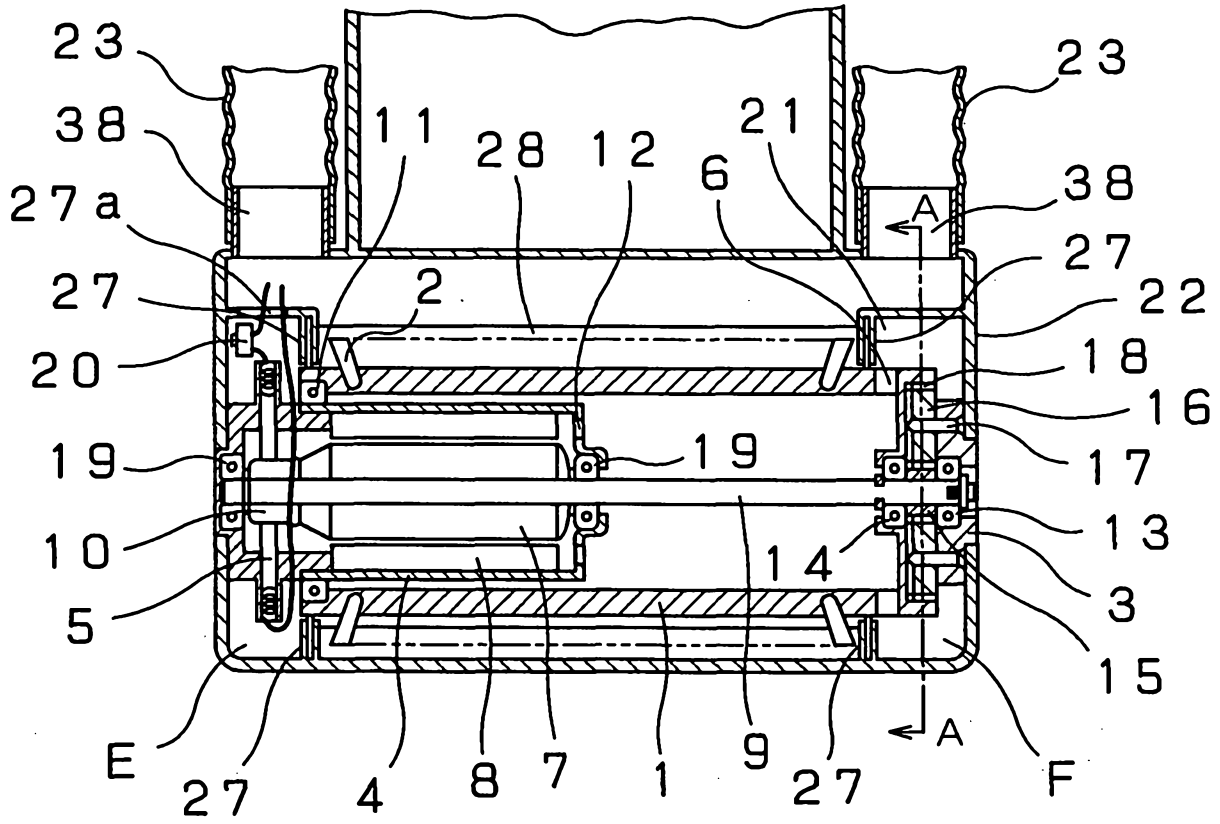
23
38
27a
27
20
19
10
5
E
27
4
8
7
1
9
27
F
15
3
13
14
16
17
18
22
27
38
23
11
28
12
6
21
2
A
A

Fig. 3

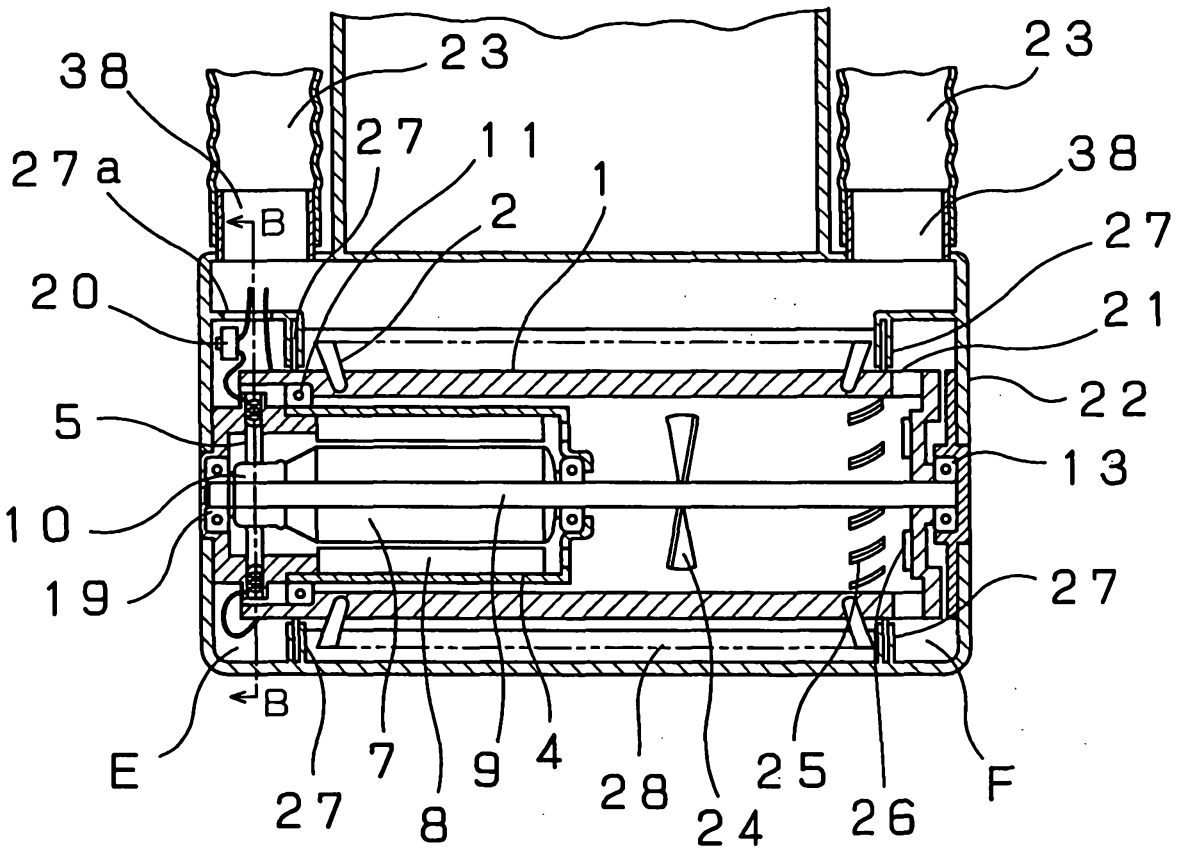
38
23
23
27
11
27a
B
2
1
38
27
20
21
5
22
13
10
19
27
B
E
27
7
8
9
4
28
24
25
26
F

Fig. 4

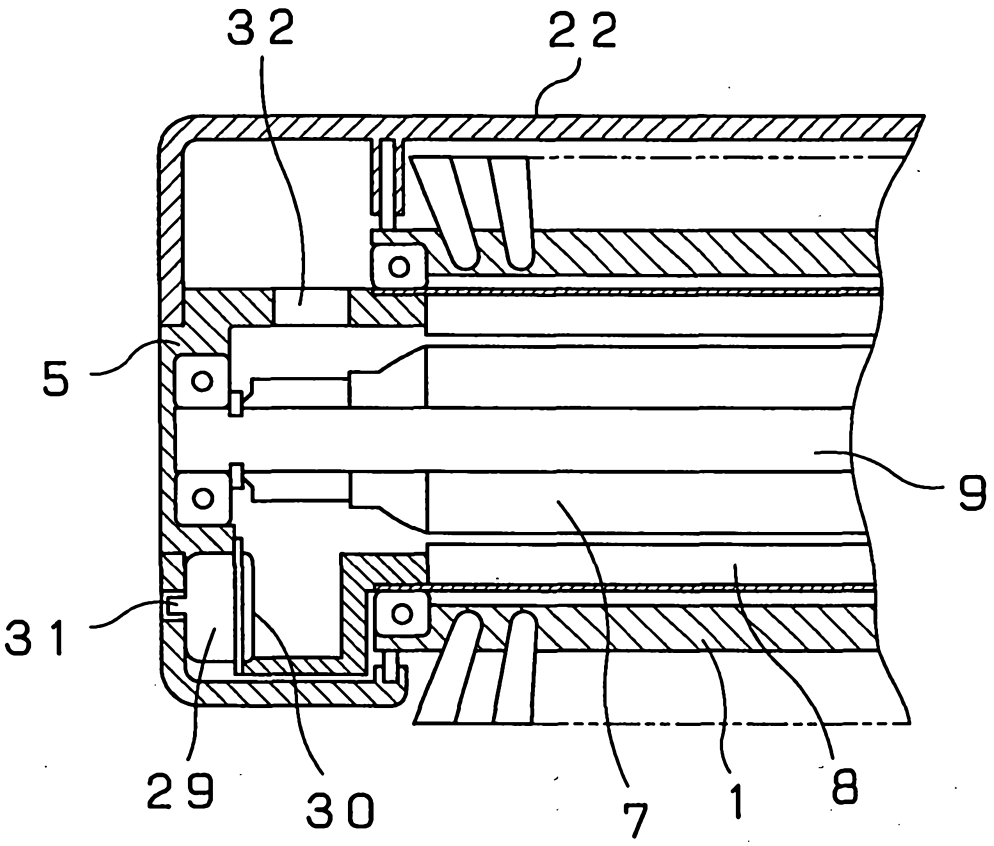

Fig. 5

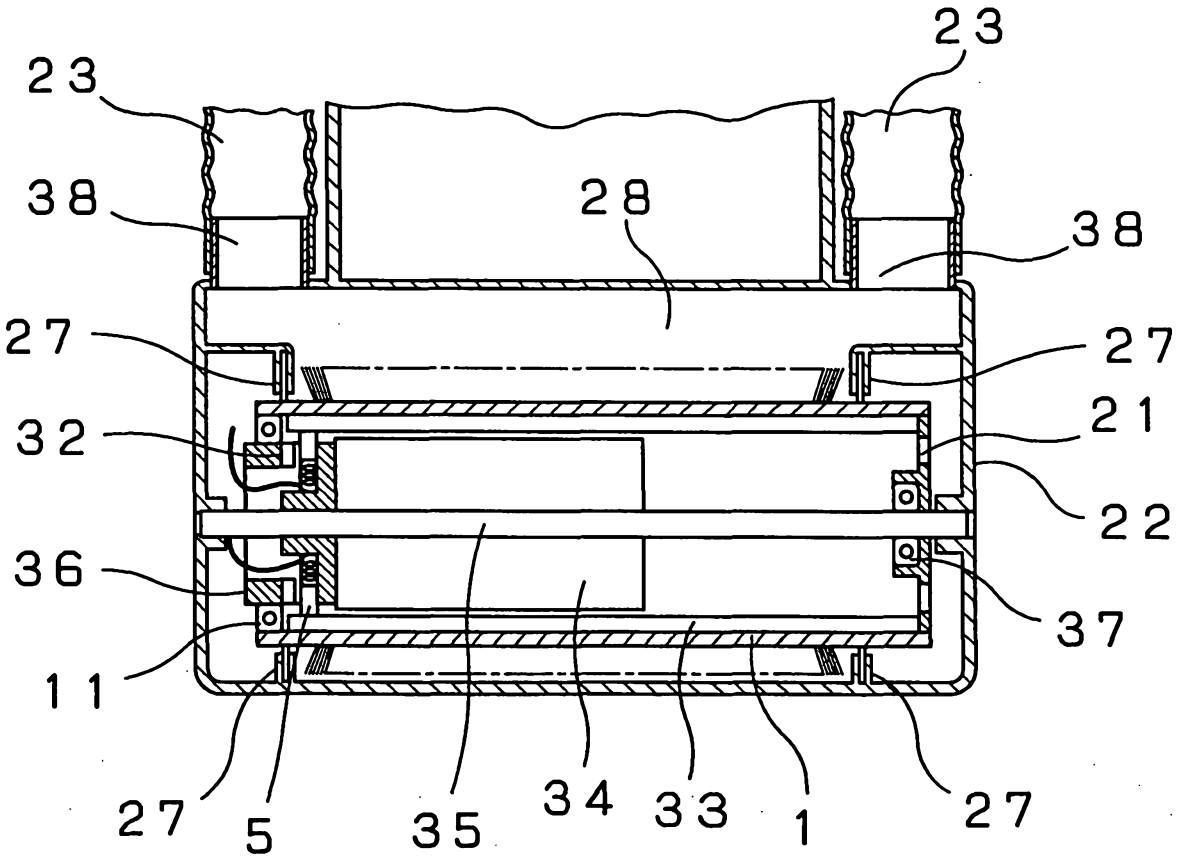

Fig. 6

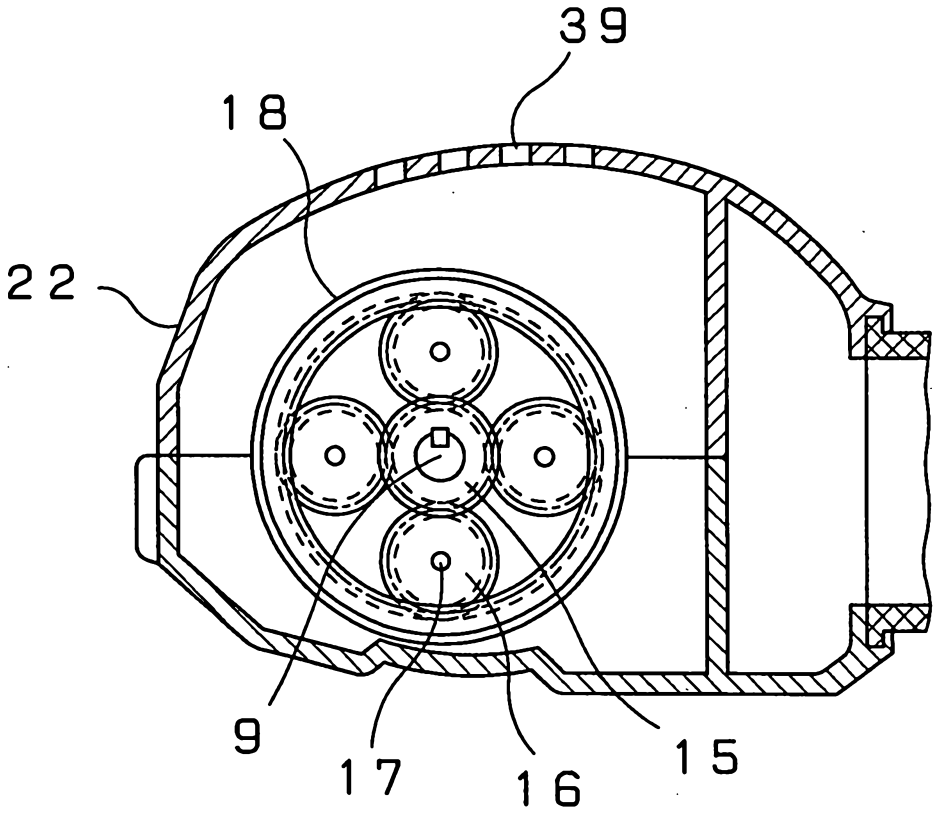

Fig. 7

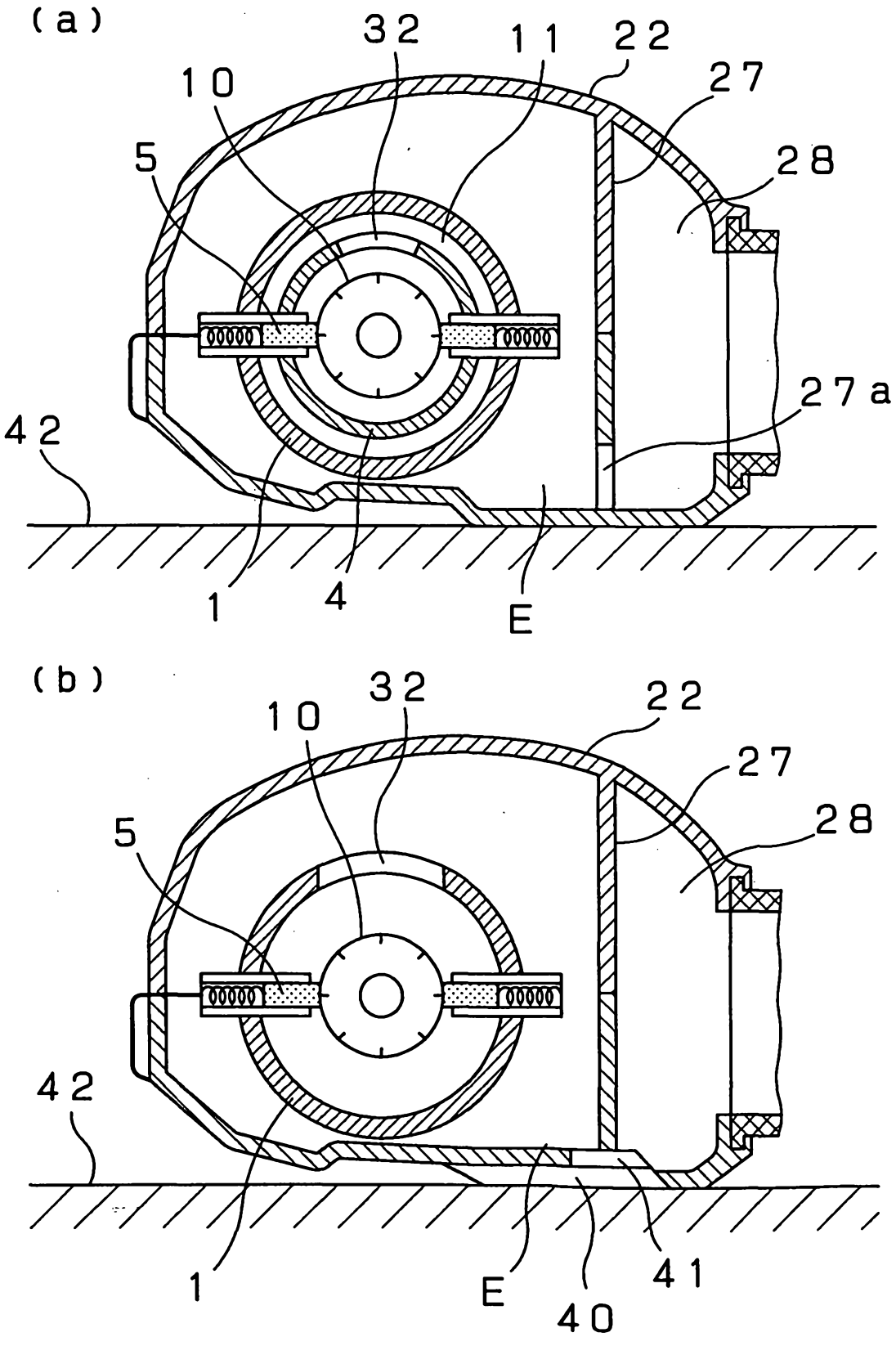

Fig. 8

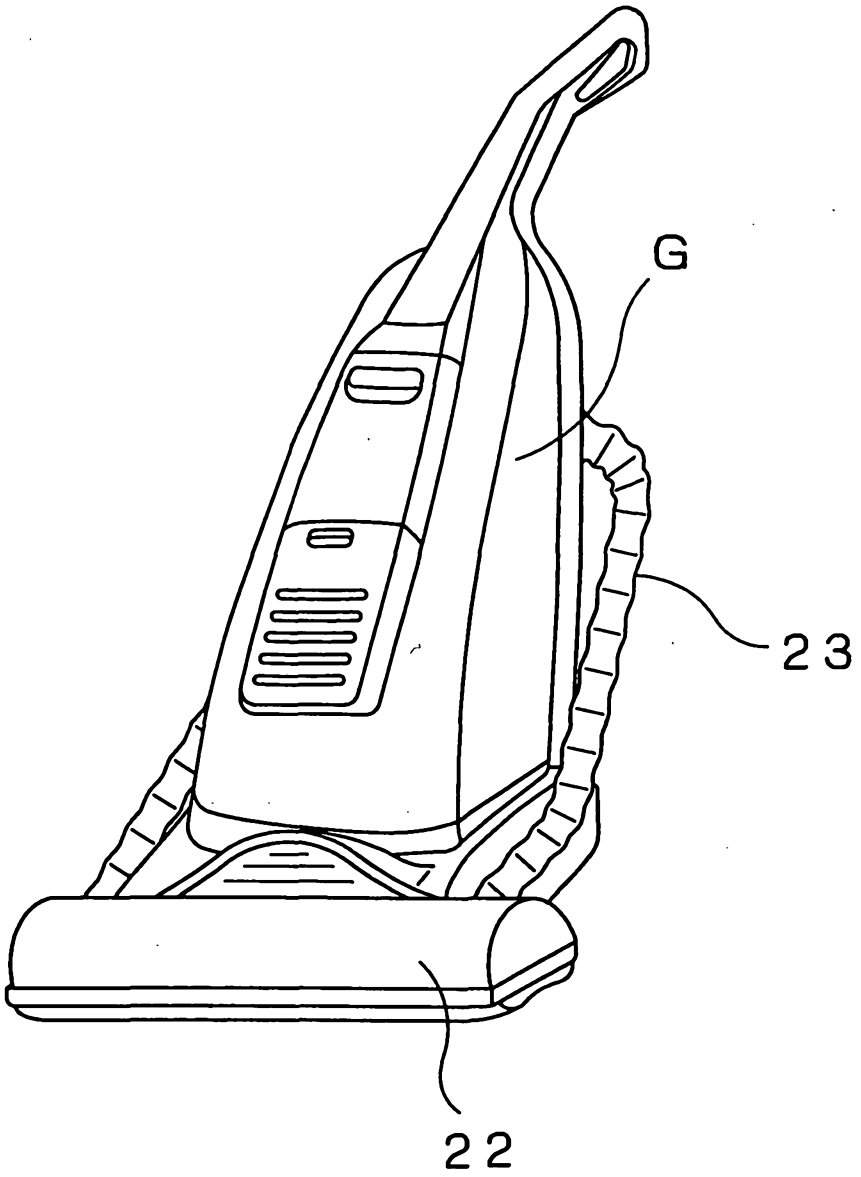

Fig. 9

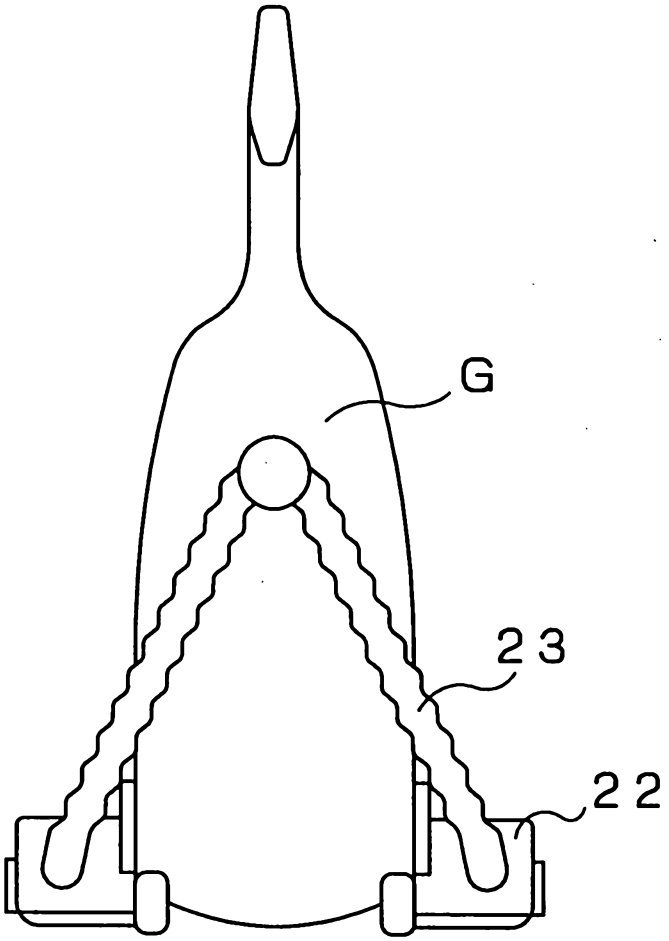

Fig. 10

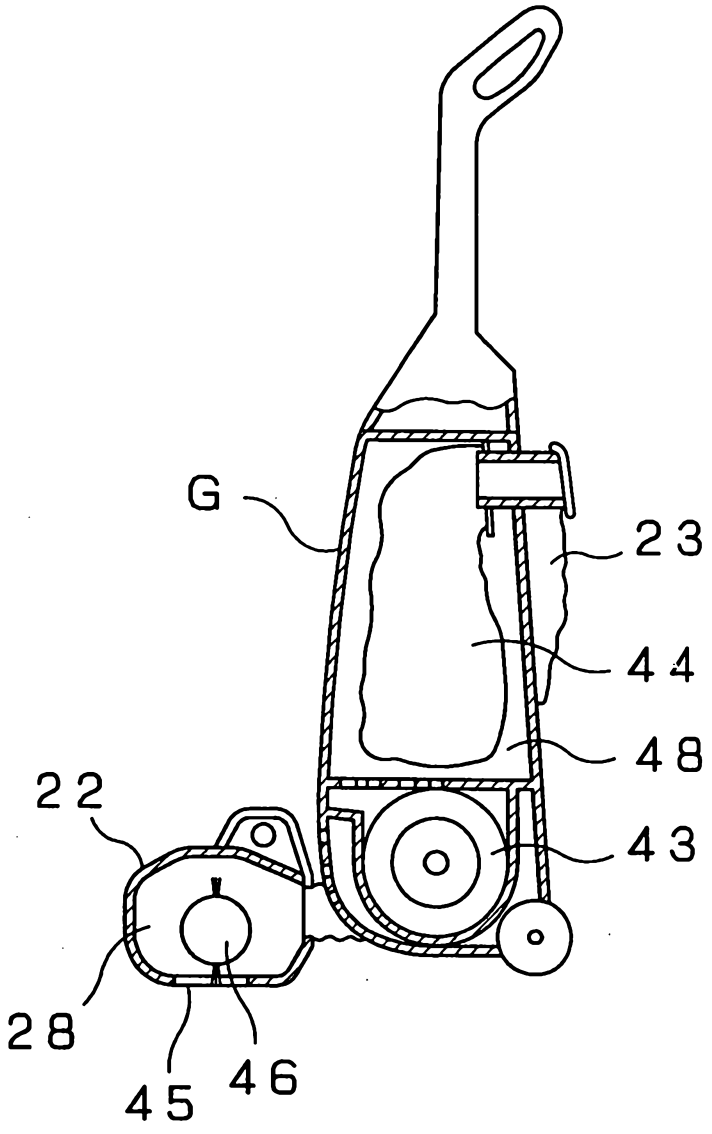

Fig. 11

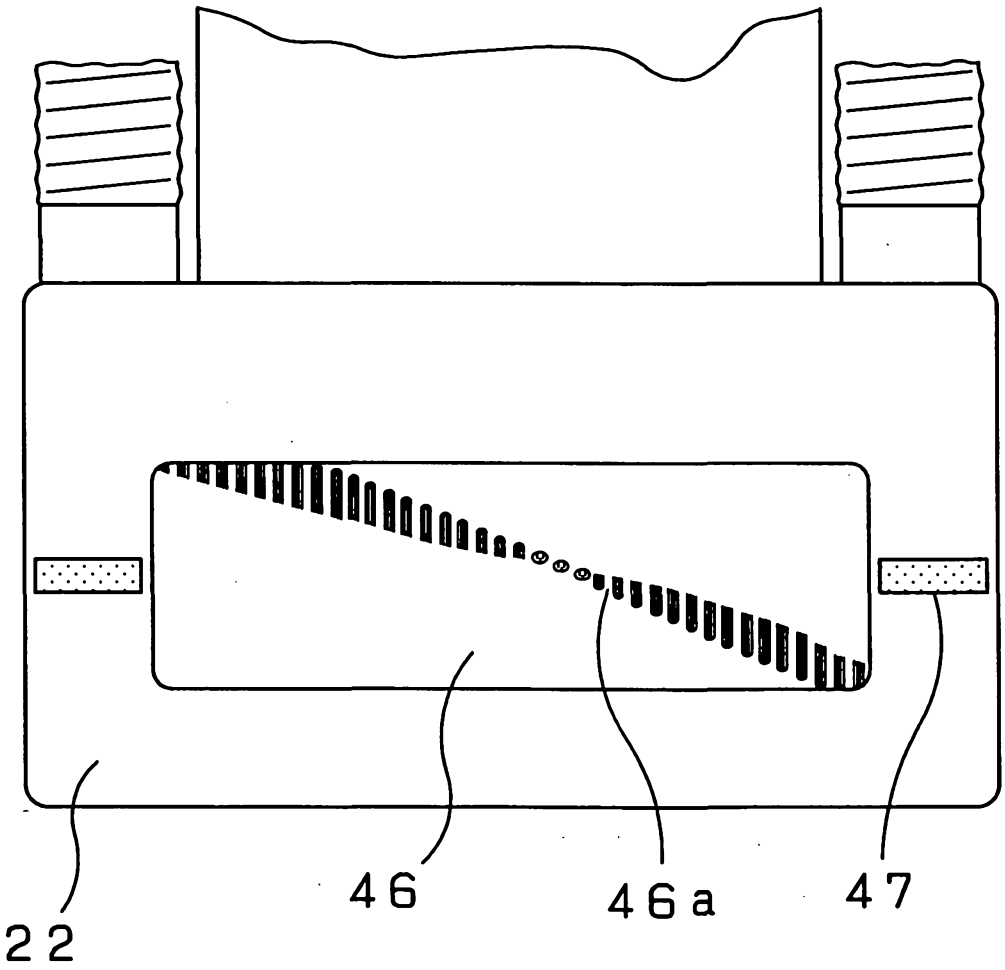

Fig. 12

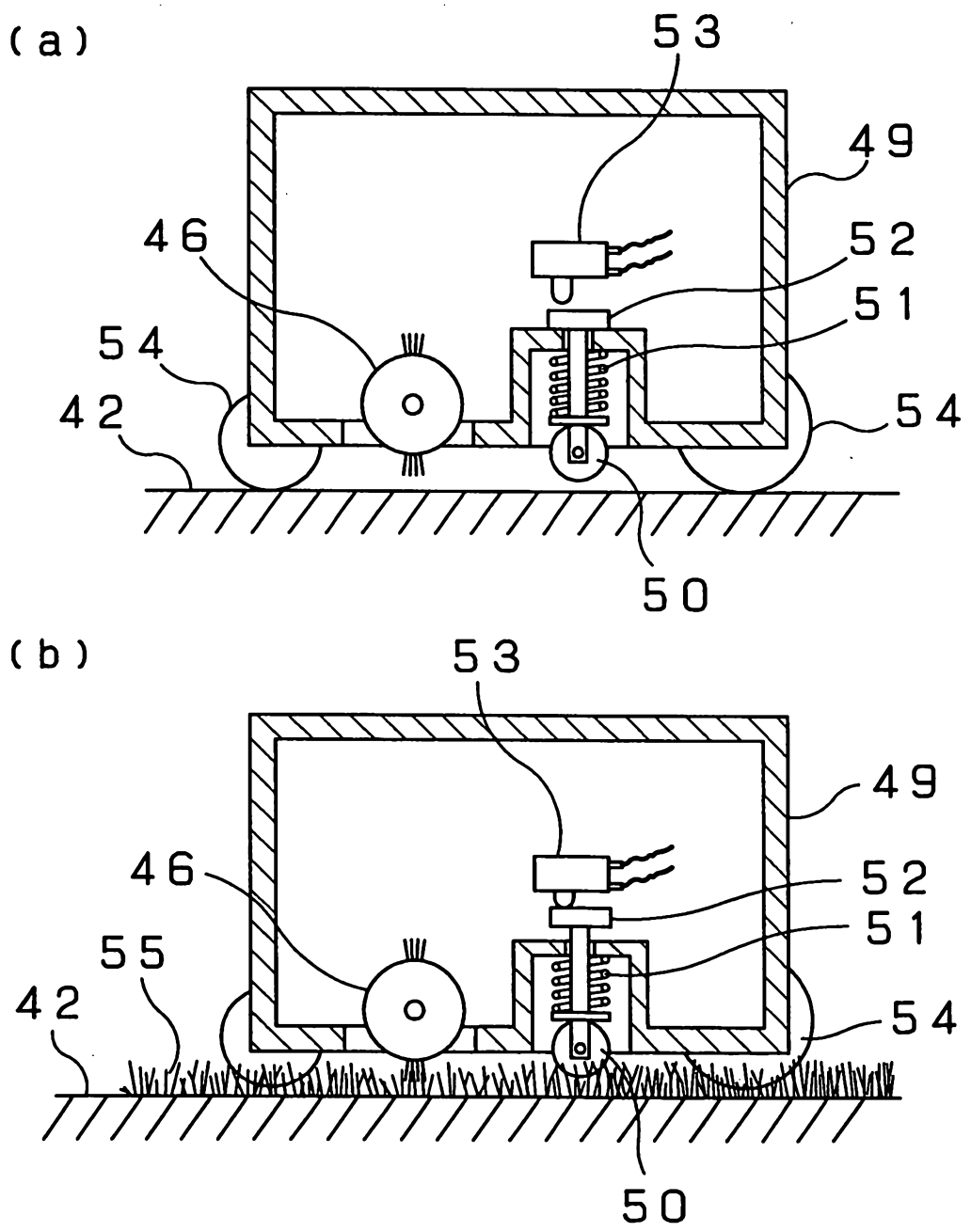

Fig. 13

