Nov. 21, 1950 W. S. THOMAS 2,531,308

METHOD FOR MAKING BATTERY TERMINAL CONNECTORS

Filed Oct. 19, 1948

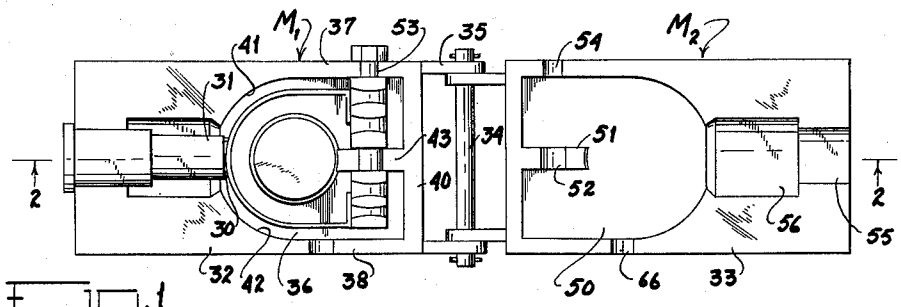

FIG. 1

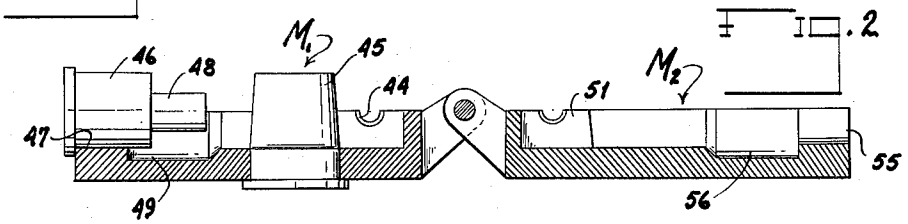

FIG. 2

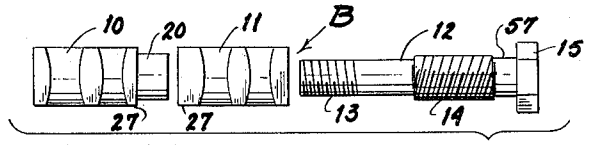

FIG. 3

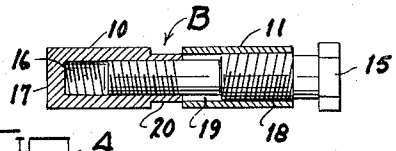

FIG. 4

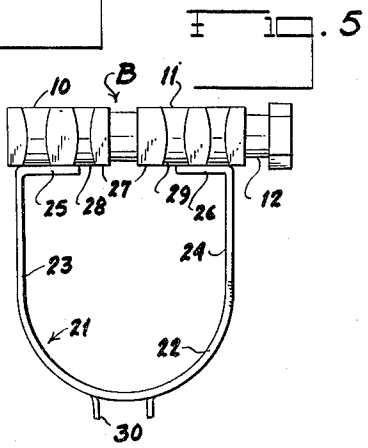

FIG. 5

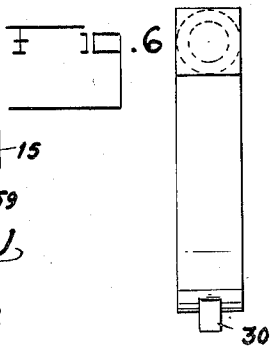

FIG. 6

FIG. 7

By

Inventor
WILLIAM S. THOMAS
Joshua R. H. Potts
His Attorney

Patented Nov. 21, 1950

2,531,308

UNITED STATES PATENT OFFICE

2,531,308

METHOD FOR MAKING BATTERY TERMINAL CONNECTORS

William S. Thomas, Williamsport, Pa., assignor, by mesne assignments, to Peter Zayac, Johnson City, Joseph Marconi, Endicott, and Henry C. Schloer, Vestal, N. Y., a partnership

Application October 19, 1948, Serial No. 55,359

2 Claims. (Cl. 29—155.55)

1

The present invention deals with a method of producing terminal connectors of the type commonly employed in anchoring a cable to the terminal post of a battery and is concerned primarily with a method which provides for embedding a hard metallic bushing assembly in a soft alloy jaw structure.

This application is a continuation in part of the copending application filed in the name of William S. Thomas, Serial Number 7,173, filed February 9, 1948, and entitled Battery Terminal Connector.

In the copending application above-identified, there is disclosed a terminal connector which consists essentially of a pair of complemental jaws having confronting faces formed with recesses which cooperate to define an opening that is adapted to receive the terminal post of a battery. These jaws are of a non-corrosive alloy and have portions adjacent to the free ends thereof, in each of which is embedded a hard metallic bushing. A screw stem is associated with these bushings and provides for positive actuation of the jaws either in clamping them about the terminal post of a battery or in loosening them from such a post.

The present invention has in view, as its foremost objective, the provision of a method of assembling a terminal connector of the type above indicated.

More in detail, an object of the invention is to provide a method of the type indicated which includes the steps of first assembling a pair of complemental bushings with a screw stem that is threaded into the bushings and which is operable to move the bushings relative to one another, and then casting the metallic alloy jaw structure about the bushings.

A terminal connector including a bushing assembly, of the type indicated, necessarily includes a screw stem having a head which is the operating member. This head is normally spaced from the outer face of the adjacent jaw. Hence, in casting the alloy about the bushing assembly provision must be made for this spacing. Thus, a further object is to provide, in a method of the character noted, the step of arranging the bushing assembly relative to the mold employed in the casting so that the wall structure of the mold provides the spacing between the head of the screw stem and the outer jaw surface.

In order to provide the positive actuation of the jaws, which is the main objective in the copending application above referred to, the

2

bushings must be of hard metal such as steel. The alloy from which the main portion of the jaws is formed is non-corrosive and soft as compared to the bushings. This alloy must completely enclose the bushings so as to prevent any corrosion of the metal. Thus, a further object is to provide, in a method of the type indicated, the steps of casting the alloy completely around the bushing.

In another copending application of William S. Thomas, filed October 19, 1948, Serial Number 55,360 and entitled Terminal Connector, there is disclosed a further improvement of the connector of the first copending application in which a steel reenforcing member is secured to the bushings and embedded in the jaw structure.

Another highly important object of the present invention is to provide, in a method of the type noted, the steps of first assembling the bushings with the screw stem, then anchoring the ends of the reenforcing member to the respective bushings, and finally casting the metallic alloy of the jaws about the bushing assembly and reenforcing member.

In every terminal connector of this type, provision is made for anchoring the end of a cable to the connector. In accordance with certain recent developments in this art, a brass sleeve or one of a comparable deformable metal is included in the connector together with a set screw for clamping the sleeve tightly about the bared wires of a cable. The present invention contemplates a method of making connectors of this type in which such a sleeve is included and availed of as a means for assisting in supporting the reenforcing member aforesaid in position in the mold.

In accordance with this invention, the reenforcing member is of a U-shaped formation and has a bend portion that partially encircles the post receiving opening. A pair of tongues are struck from this bend portion and are received in one end of the sleeve aforesaid so as to properly position the reenforcing member whereby the alloy may be completely cast thereabout.

Various other more detailed objects and advantages of the invention such as arise in connection with carrying out the above noted ideas in a practical embodiment will in part become apparent, and in part, be hereinafter stated as the description of the invention proceeds.

The invention, therefore, comprises a method of making battery terminal connectors and which method includes the steps of first assembling bushings on a screw stem, anchoring the ends of

a reenforcing member to the respective bushings, and then casting a metallic alloy about said bushings and reenforcing member.

For a full and more complete understanding of the invention, reference may be had to the following description and accompanying drawing wherein:

Figure 1 is a top plan view of a two part mold in open position and showing a bushing assembly and reenforcing member assembled together and positioned therein for the casting operation.

Figure 2 is a longitudinal section through the mold shown in Figure 1, and is taken about on the plane represented by the line 2—2 of Figure 1.

Figure 3 is a view in elevation developing the elements of the bushing assembly in exploded relation.

Figure 4 is a section through the bushings as the latter are assembled on the screw stem.

Figure 5 is a top plan view showing the reenforcing member after anchorage to the bushing.

Figure 6 is a view in end elevation of the assembly shown in Figure 5 and

Figure 7 is a top plan view of the completed connector.

Referring now to the drawing wherein like reference characters denote corresponding parts, and first more particularly to Figure 3, the bushing assembly therein is illustrated and referred to in its entirety by the reference character B. This assembly B comprises a first bushing 10, a second bushing 11 and a screw stem 12. It will be noted that the screw stem 12 has oppositely threaded sections 13 and 14 of different diameters, and a non-circular head 15 such as the hexagon illustrated.

Upon referring to Figure 4, it will be noted that the bushing 10 has a threaded bore 16 which is closed at one end by an end wall 17. The bushing 11 has a bore with a threaded section at 18 and a smooth section at 19. The bushing 10 is formed with a smooth cylindrical extension 20 that is adapted to be telescopically received in the smooth bore section 19.

The first step of the present method is to assemble the elements of the bushing assembly B, such as shown in Figure 3, into the assembled relation depicted in Figure 4. In this position the threaded section 13 of the stem 12 is screwed into the threaded bore 16 and the threaded section 14 is screwed into the threaded section 18 of the bore of the bushing 11. Moreover, only the marginal end portion of the extension 20 will be telescoped into the bushing 11 whereupon it is positioned just at the entrance of its smooth bore section 19.

The next step is to anchor a reenforcing member such as that shown at 21 in Figure 5 to the bushings 10 and 11. This reenforcing member 21 is of the U-shaped formation illustrated providing a bend portion 22 and legs 23 and 24. The leg 23 has an inwardly turned end flange 25 and the leg 24 has a similar end flange 26.

Both of the bushings 10 and 11 are formed with external ribs 27 and the periphery of these ribs is non-circular so as to provide flat faces at 28 and 29 respectively. The ribs 27 perform a dual function. After the metallic alloy is later cast thereabout, they provide a firm bond between the alloy and the bushings. And in providing the flat faces at 28 and 29, a good face to face engagement with the flanges 25 and 26 is afforded. These flanges 25 and 26 are preferably spot welded to the bushings 10 and 11 on the faces 28 and 29. This completes the assembly of the bushing assembly B with the reenforcing member 21.

It will be understood that the metallic alloy, which is used as the metal from which the terminal jaws are made, could be cast about the bushing assembly B without the reenforcing member 21. Also that the sleeve now to be described need not necessarily be included in the connector structure. However, the manner in which this sleeve is assembled is herein described to the end of completing the description of the preferred embodiment.

As shown in Figures 5 and 6, the bend portion 22 of the reenforcing member 21 has a pair of tongues 30 struck therefrom in spaced relation. These tongues are adapted to be received in one end of a sleeve such as shown at 31 in Figure 1. This sleeve completes the assembly of parts about which the metallic alloy is to be cast.

Upon referring more particularly now to Figures 1 and 2, a mold, which may be used in casting the alloy about the assembly above described, is herein illustrated. This mold comprises two complemental mold parts M1 and M2. The mold part M1 has a face 32 which is designed for meeting engagement with the face 33 on the mold part M2, the two mold parts being hingedly connected by the hinged pin 34 which extends through aligned openings in ears 35 formed of the respective mold parts.

The face 32 of the mold part M1 is formed with a main depression 36 that is defined by side walls 37 and 38, and end wall 40, and curved walls 41 and 42. Extending into this depression 36 from substantially the midpoint of the end wall 40, is a rib 43 formed with a semicylindrical notch 44. A tapered core 45 extends upwardly through the recess 36 from the central part of the bottom of the recess 36. This tapered core defines the opening in the connector which is adapted to receive the terminal post of the battery.

Another core member 46 is carried by the mold part 41 substantially midway between the side edges thereof and is fitted in a curved depression as represented at 47. This core 46 has a reduced extension 48 which receives the sleeve 31 to position the latter over another recess 49 which communicates with the recess 36.

The face 33 of the mold part M2 is formed with a main recess 50 that is complemental to the recess 36. These two recesses cooperating to define the chamber in which the jaws are cast. The mold part M2 has a rib 51 that corresponds to the rib 43 in mold part M1 and which is formed with a semicircular notch 52. At this point, it is well to note that the side wall 37 of the mold part M1 is formed with a semicircular notch at 53 and the corresponding side wall of the mold part M2 is formed with a complemental circular notch 54. The mold part M2 also has a recess at 55 which corresponds to the recess 47 and cooperates therewith to define the opening which accommodates the core 46. The mold part M2 also has another recess at 56 which is complemental to the recess 49 and cooperates therewith to define the chamber in which the cable anchorage of the connector is cast.

The bearing assembly B is positioned in the mold part M1 so that the extension 20 rests on the semicircular notch 44 of the rib 43. The screw stem 12 has a smooth section 57 immediately adjacent to the head 15 and this section is received in the notch 53. The sleeve 31 is positioned over the extension 48, and the tongues 30 positioned in the end of the sleeve 41. Thus,

the bushing assembly B, reenforcing member 21 and sleeve 31 are positioned in the mold part M1. The mold part M2 is now swung over into position to complete the various chambers which are to define the parts of the connector. The alloy is now poured in a molten condition, and after it has solidified by cooling, the mold parts are opened, and the connector, such as shown in Figure 7, removed therefrom. This connector has a cable anchorage at C which encloses the sleeve 31 and complemental jaws at J. These jaws are designated 58 and 59. Jaws 58 and 59 have confronting faces 60 and 61 which are formed with recesses 62 and 63 respectively. They define the opening which receives the terminal post of the battery. This opening is tapered due to the tapered formation of the core 45.

It will be seen that the jaw 58 has a portion at 64 adjacent to its free end in which the bushing 10 is embedded. Likewise, the body 59 has a portion 65 adjacent to its free end in which the bushing 11 is embedded. The head 15 of the screw stem 12 is spaced from the outer face of the jaw 59.

Obviously, either of the mold parts or both of them may be formed with an opening which constitutes an inlet for the molten alloy. Such openings are shown at 66.

While a preferred specific embodiment of the invention is hereinbefore set forth, it is to be clearly understood that the invention is not to be limited to the exact steps and apparatus illustrated and described because various modifications of these details may be provided in putting the invention into practice within the purview of the appended claims.

What is claimed is:

1. In the making of a battery terminal connector, the method comprising the steps of: (*a*) assembling a pair of oppositely threaded bushings on a screw stem with only a slight marginal portion of a reduced coaxial extension of one bushing telescoped into a smooth bore portion of the other bushing of substantially the same diameter and length as the extension of said one bushing, with said screw stem having a head on said stem spaced from said other bushing by a smooth cylindrical portion of said stem, (*b*) anchoring each end of a U-shaped reenforcing member to one of said assembled bushings by spot welding, (*c*) positioning said assembled bushings and stem together with said reenforcing member in one part of a two part mold with said extension fitting in a notch in a rib on said mold part and said smooth stem portion being received in a notch in a wall of said mold part whereby the remainder of said assembled bushings are maintained spaced from said mold part, (*d*) fitting a complemental mold part over said first mold part, and (*e*) casting an alloy about said bushings and reenforcing member to form the connector having jaws in which said bushings are embedded.

2. In the making of a battery terminal connector, the method comprising the steps of: (*a*) assembling a pair of oppositely threaded bushings on a screw stem with only a slight marginal portion of a reduced coaxial extension of one bushing telescoped into a smooth bore portion of the other bushing of substantially the same diameter and length as the extension of said one bushing, with said screw stem having a head on said stem spaced from said other bushing by a smooth cylindrical portion, (*b*) anchoring each end of a U-shaped reenforcing member to one of said assembled bushings by spot welding, (*c*) fitting a deformable metal sleeve over a core extension that is included as an element of a mold part, (*d*) positioning said assembled bushings, stem, and reenforcing member in said mold part at the same time establishing an interlock between one end of said sleeve and approximately the midpoint of the reenforcing member while said extension is supported from a rib in said mold part and said smooth portion by a wall of said mold part, (*e*) fitting a complemental mold part over the first said mold part, and (*f*) casting an alloy about said bushings, reenforcing member, and sleeve.

WILLIAM S. THOMAS.

REFERENCES CITED

The following references are of record in the file of this patent:

UNITED STATES PATENTS

Number	Name	Date
707,352	Pope	Aug. 19, 1902
745,746	Ware	Dec. 11, 1903
1,150,919	Willard	Aug. 24, 1915
1,415,027	Gebhardt	May 9, 1922
1,613,214	Williams	Jan. 4, 1927
1,642,484	Burgett	Sept. 13, 1927
1,766,515	Hiebert	June 24, 1930
1,808,330	Waltz	June 2, 1931
1,837,814	Grunwald	Dec. 22, 1931
1,914,998	Looker	June 20, 1933
2,111,107	Walde	Mar. 15, 1938
2,191,503	Shumway	Feb. 27, 1940