US00D766528S

(12) United States Design Patent

Choi et al.

(10) Patent No.: US D766,528 S
(45) Date of Patent: ** Sep. 13, 2016

(54) **CLEANING TOOL**

(71) Applicant: **3M INNOVATIVE PROPERTIES COMPANY**, St. Paul, MN (US)

(72) Inventors: **Joongho Choi**, Seoul (KR); **Taeno Yoon**, Chungcheongnam-do (KR); **Seungyoub Oh**, Gyeonggi-do (KR); **In-Hwan Lee**, Gyeonggi-do (KR)

(73) Assignee: **3M INNOVATIVE PROPERTIES COMPANY**, St. Paul, MN (US)

(**) Term: **14 Years**

(21) Appl. No.: **29/498,101**

(22) Filed: **Jul. 31, 2014**

(51) **LOC (10) Cl.** **04-01**

(52) **U.S. Cl.**
USPC **D32/50**

(58) **Field of Classification Search**
USPC D32/40–42, 50–52, 38–39, 15, 17, D32/21–22, 31
CPC A47L 13/12; A47L 13/16; A47L 13/20; A47L 13/24; A47L 13/144; A47L 13/146; A47L 13/225
See application file for complete search history.

(56) **References Cited**

U.S. PATENT DOCUMENTS

3,099,855	A	*	8/1963	Nash	A47L 13/29 15/231
5,876,141	A	*	3/1999	Hsu	B25G 3/38 15/144.2
D503,836	S	*	4/2005	Hall	D32/50
D506,050	S	*	6/2005	Lalanne	D32/45
D514,267	S	*	1/2006	Tsai	D32/45
D515,759	S	*	2/2006	Fischer	D32/45
D548,909	S	*	8/2007	Murray	D32/45
D554,815	S	*	11/2007	Harper	D32/40
D585,612	S	*	1/2009	Soller	D32/40
D597,718	S	*	8/2009	McNeil	D32/45

(Continued)

FOREIGN PATENT DOCUMENTS

GB	2079510	*	2/1999
GB	3010459	*	7/2003

(Continued)

OTHER PUBLICATIONS

Amazon.com: MR. SIGA Aluminum Microfiber Floor Mop, website copyright 2016, http://www.amazon.com/MR-SIGA-Aluminum-Microfiber-Floor/dp/B013515146/ref=sr_1_133?ie=UTF8&qid=1460768179&sr=8-133&keywords=mops, site visited Apr. 15, 2016.*

(Continued)

Primary Examiner — John Windmuller
Assistant Examiner — John R Yeh
(74) *Attorney, Agent, or Firm* — Irina Hass

(57) **CLAIM**

The ornamental design for a cleaning tool, as shown and described.

DESCRIPTION

FIG. **1** is a perspective view showing the new design for a cleaning tool;
FIG. **2** is a right side view thereof, a left side view being a mirror image thereof;
FIG. **3** is a front view thereof;
FIG. **4** is a rear view thereof;
FIG. **5** is a bottom view thereof;
FIG. **6** is a top view thereof; and,
FIG. **7** is a perspective view thereof showing the cleaning tool with a handle.
The portions of the cleaning tool in FIGS. **1-7** shown in broken lines are included to show features that form no part of the claimed design.

1 Claim, 7 Drawing Sheets

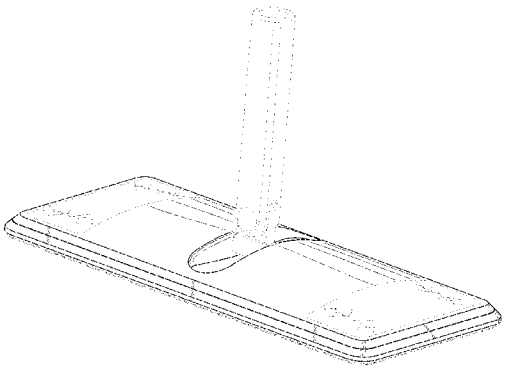

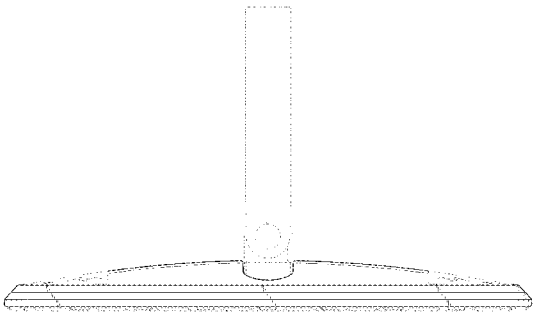

(56) **References Cited**

U.S. PATENT DOCUMENTS

D607,165	S	*	12/2009	Libman	D32/45
D615,260	S	*	5/2010	Koenig	D32/45
D653,827	S	*	2/2012	Lee	D32/50
D654,238	S	*	2/2012	Lee	D32/50
D677,031	S	*	2/2013	Best	D32/50
8,893,343	B2	*	11/2014	Libman	A47L 13/44 15/147.2
D719,709	S	*	12/2014	Gidwell	D32/40
D720,906	S	*	1/2015	Baldwin	D32/50
2002/0042962	A1	*	4/2002	Willman	A47L 13/16 15/208
2004/0178284	A1	*	9/2004	Fahy	A47L 13/22 239/228
2005/0022843	A1	*	2/2005	Policicchio	A47L 13/20 134/6
2012/0159728	A1	*	6/2012	Suda	A47L 13/20 15/104.93
2015/0082570	A1	*	3/2015	Davidshofer	A47L 13/258 15/228

FOREIGN PATENT DOCUMENTS

KR	10-1257620		4/2013
KR	10-1272212		6/2013
KR	300700798.0000	*	7/2013
KR	10-1304132		9/2013
KR	10-1306878		9/2013

OTHER PUBLICATIONS

Amazon.com: Quickie Microfiber Dust Mop, review date May 12, 2012, http://www.amazon.com/Quickie-Microfiber-060-Green-Handle/dp/B002M8MXB2/ref=sr_1_65?ie=UTF8 &qid=1460767985&sr=8-65-spons&keywords=mops&psc=1, [site visited Apr. 15, 2016 8:54:28 PM].*

Amazon.com: Linkyo Professional Microfiber Floor Mop, review date 2016, http://www.amazon.com/LINKYO-Professional-Microfiber-Floor-Mop/dp/B018STEIMK/ref=cm_cr_arp_d_ product_top?ie=UTF8, [site visited Apr. 15, 2016 8:51:51 PM].*

Amazon.com: O-Cedar EasyWring UltraMax Flat Spin Mop, review date Dec. 15, 2014, http://www.amazon.com/dp/B00KM6QSB2?psc=1, [site visited Apr. 15, 2016 8:49:11 PM].*

* cited by examiner

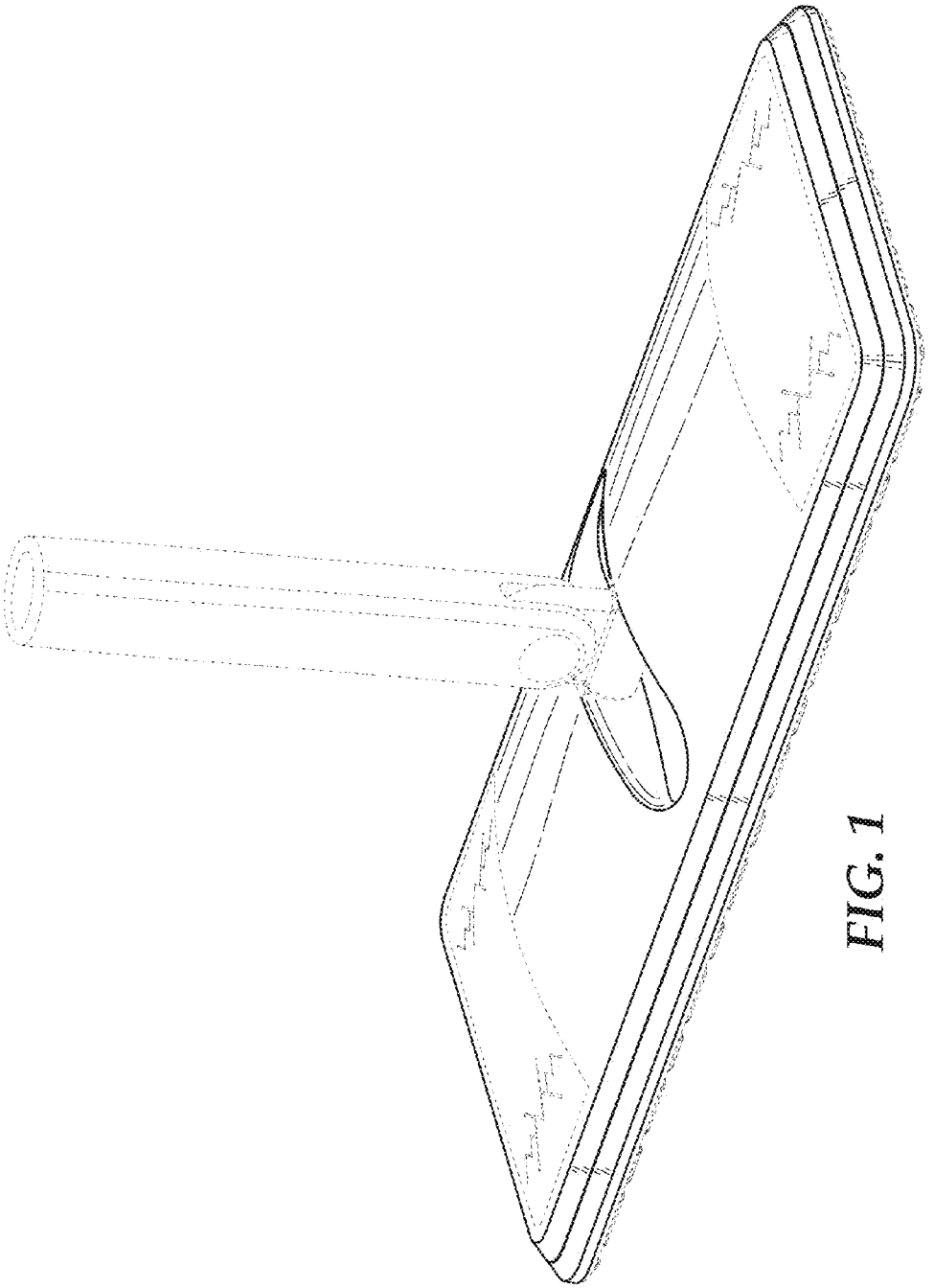

FIG. 1

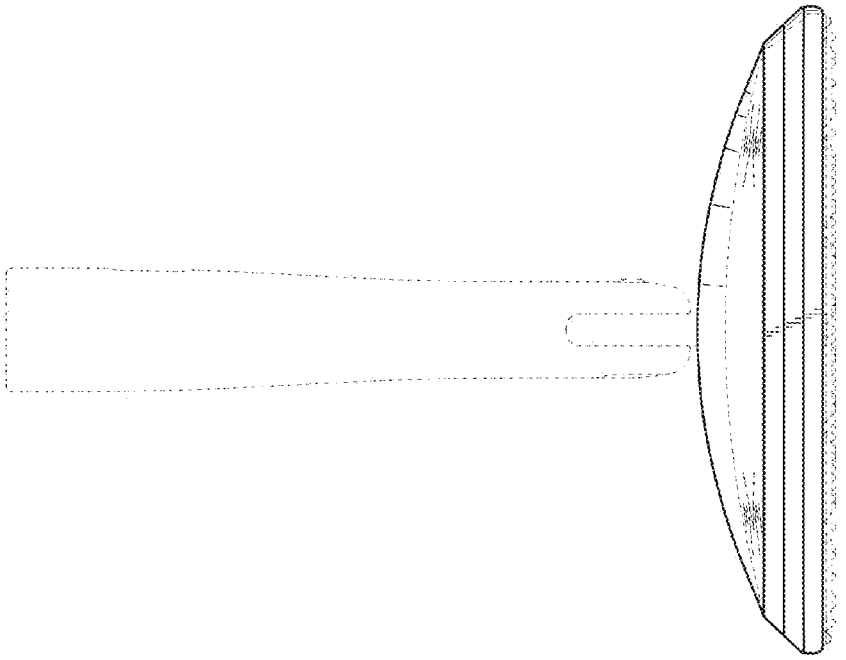

FIG. 2

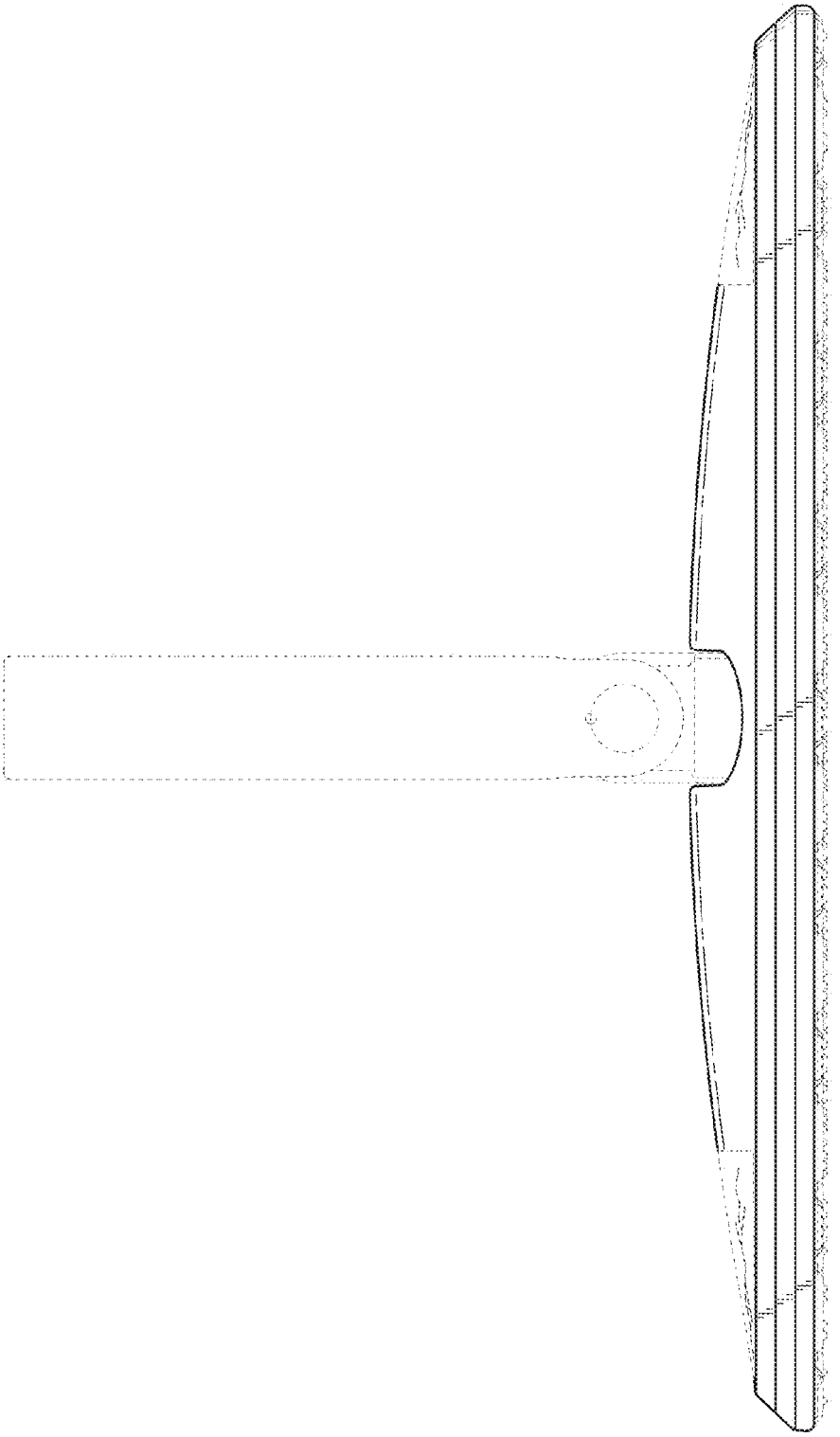

FIG. 3

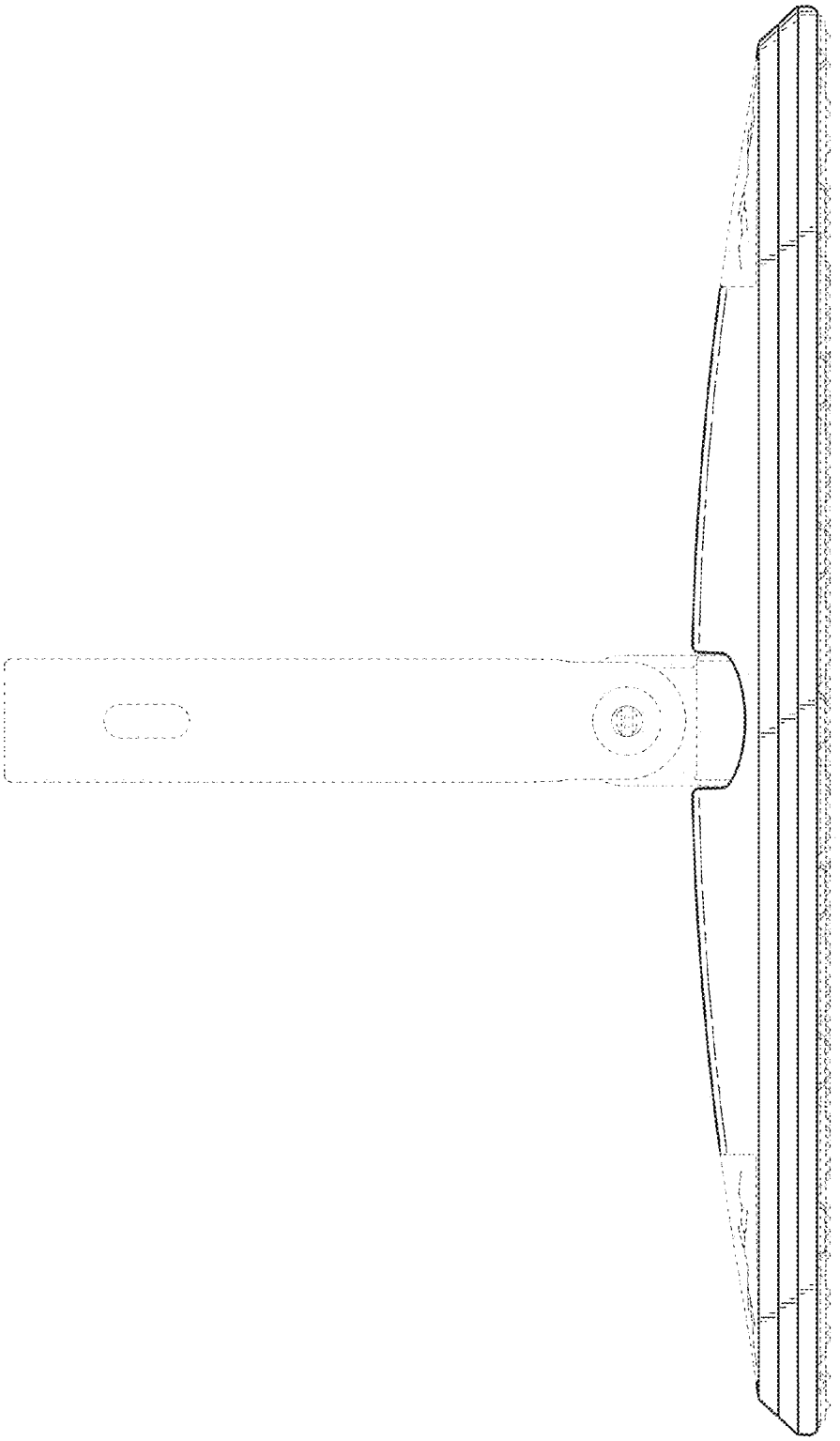

FIG. 4

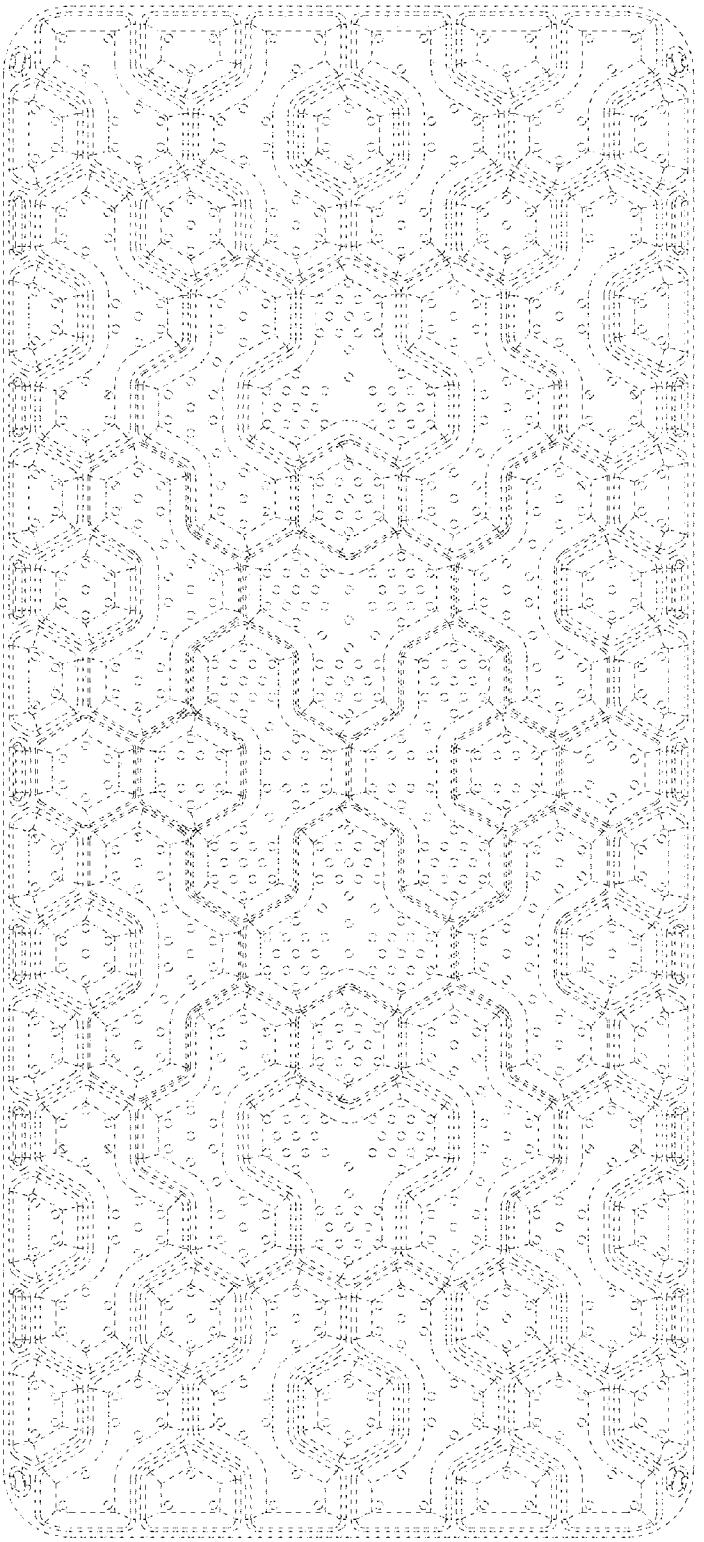

FIG. 5

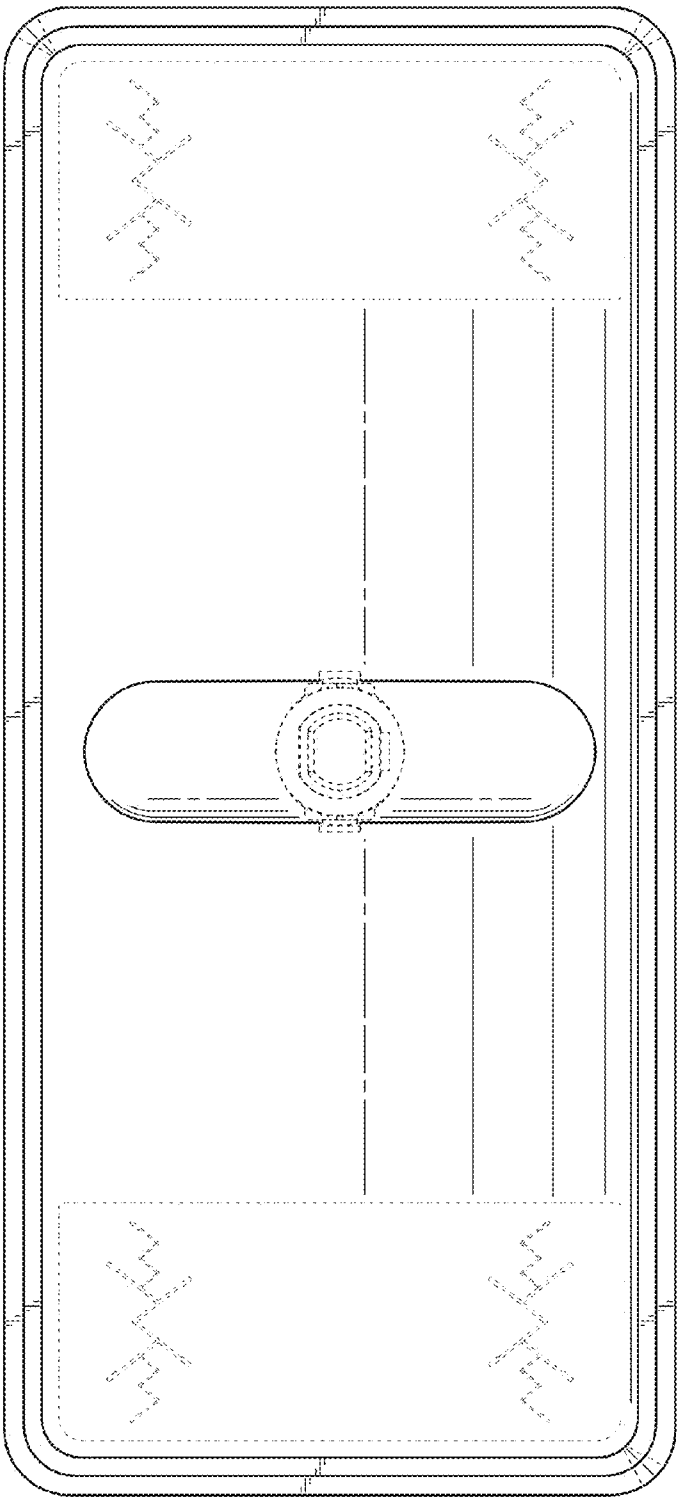

FIG. 6

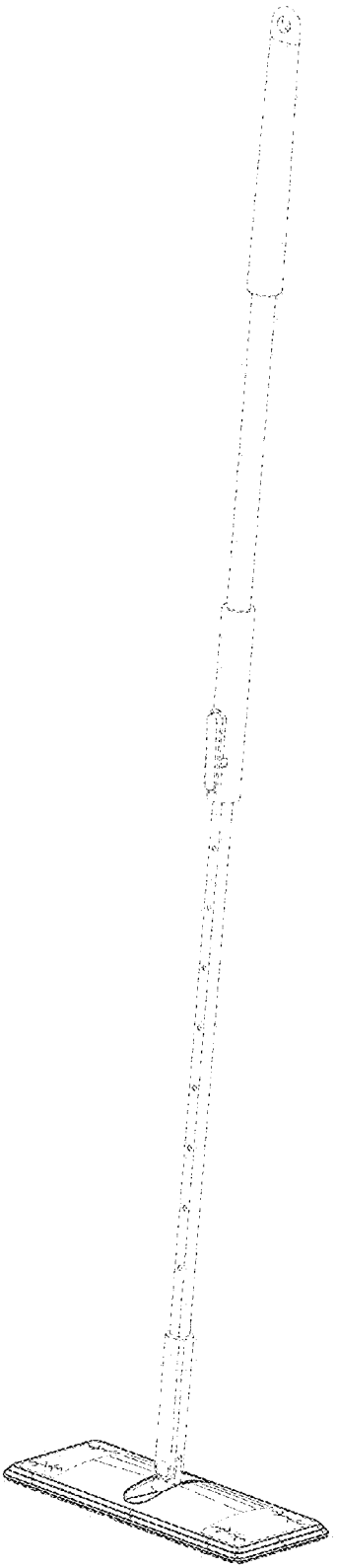

FIG. 7