# United States Patent [19]

**Patton**

[11] **Patent Number: Des. 322,609**

[45] **Date of Patent: ** Dec. 24, 1991**


[54] **REMOTE CONTROLLER**


[75] Inventor: **Douglas M. Patton**, Irvine, Calif.

[73] Assignee: **Mitsubishi Electric Sales America, Inc.**, Cypress, Calif.



[**] Term: **14 Years**

[21] Appl. No.: **348,467**

[22] Filed: **May 5, 1989**

[52] **U.S. Cl.** ..... **D14/218**

[58] **Field of Search** ..... D14/217, 218, 299; 358/194.1; 455/151, 352-355, 603, 605



[56] **References Cited**

U.S. PATENT DOCUMENTS

| | | | |
|---|---|---|---|
| D. 237,550 | 11/1975 | Bobov et al. | D14/218 X |
| D. 285,431 | 9/1986 | Hicks | D14/218 X |
| 2,920,604 | 1/1960 | McDonald, Jr. . | |
| 3,017,849 | 1/1962 | Grossenheider . | |
| 3,028,832 | 4/1962 | Lazzery . | |
| 3,294,901 | 12/1966 | Stanghi . | |
| 3,325,593 | 6/1967 | Platt et al. . | |
| 3,440,427 | 4/1969 | Kammer . | |
| 3,504,334 | 3/1970 | Turnage, Jr. . | |
| 3,866,177 | 2/1975 | Kawamata et al. . | |
| 3,894,229 | 7/1975 | Mouri . | |
| 3,928,760 | 12/1975 | Isoda . | |
| 4,036,762 | 7/1977 | Troetscher et al. . | |
| 4,045,777 | 8/1977 | Mierzwinski et al. . | |
| 4,091,272 | 5/1978 | Richter et al. . | |
| 4,111,421 | 9/1978 | Mierzwinski . | |
| 4,151,407 | 4/1979 | McBride et al. . | |
| 4,156,134 | 5/1979 | Minner . | |
| 4,231,031 | 10/1980 | Crowther et al. . | |
| 4,263,592 | 4/1981 | Takahashi et al. . | |
| 4,264,896 | 4/1981 | Sakarya et al. . | |
| 4,264,982 | 4/1981 | Sakarya . | |
| 4,549,179 | 10/1985 | Stendardo . | |
| 4,578,674 | 3/1986 | Baker et al. . | |
| 4,677,428 | 6/1987 | Bartholow . | |
| 4,687,918 | 8/1987 | Hughes et al. . | |
| 4,768,230 | 8/1988 | Viebrantz et al. . | |



*Primary Examiner*—Terry A. Pfeffer

*Attorney, Agent, or Firm*—Knobbe, Martens, Olson & Bear


[57] **CLAIM**

The ornamental design of a remote controller, as shown and described.

**DESCRIPTION**

FIG. **1** is a perspective view of a remote controller showing my new design;
FIG. **2** is a rear elevational view thereof;
FIG. **3** is a right side elevational view thereof;
FIG. **4** is a front elevational view thereof;
FIG. **5** is a left side elevational view thereof;
FIG. **6** is a top plan view thereof;
FIG. **7** is a bottom plan view thereof;
FIG. **8** is a perspective view of an alternate embodiment of FIG. **1**;
FIG. **9** is a rear elevational view of FIG. **8**;
FIG. **10** is a right side elevational view of FIG. **8**;
FIG. **11** is a front elevational view of FIG. **8**;
FIG. **12** is a left side elevational view of FIG. **8**;
FIG. **13** is a top plan view of FIG. **8**; and
FIG. **14** is a bottom plan view of FIG. **8**.

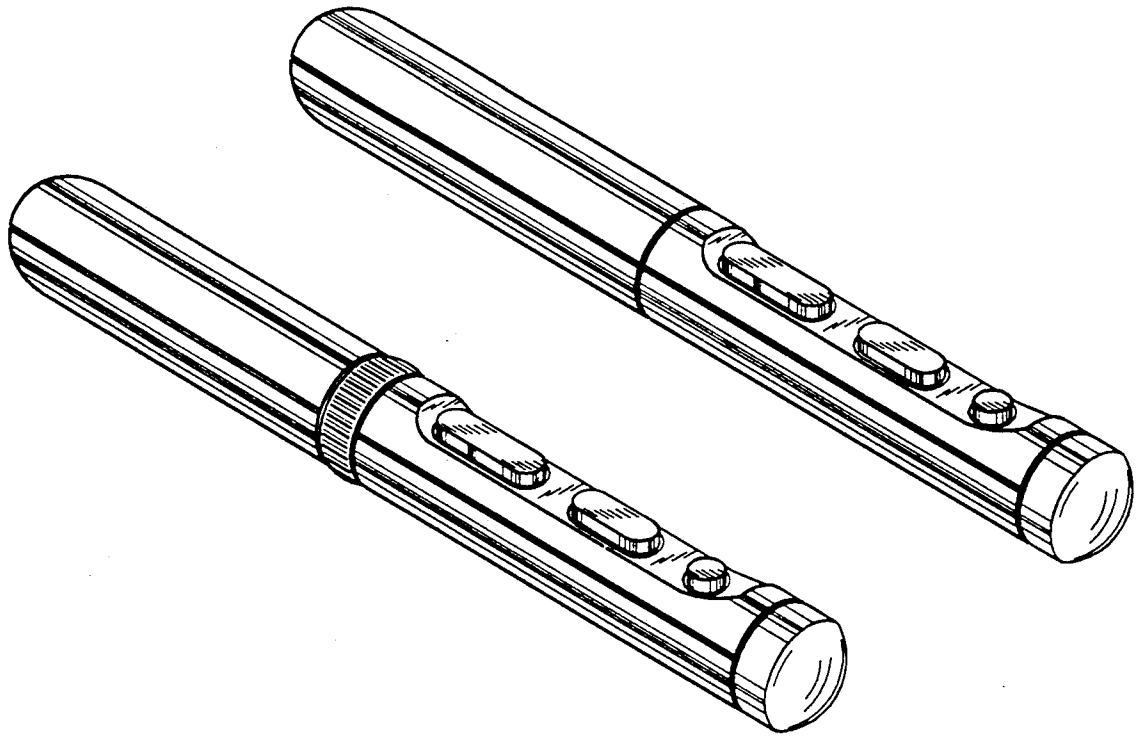

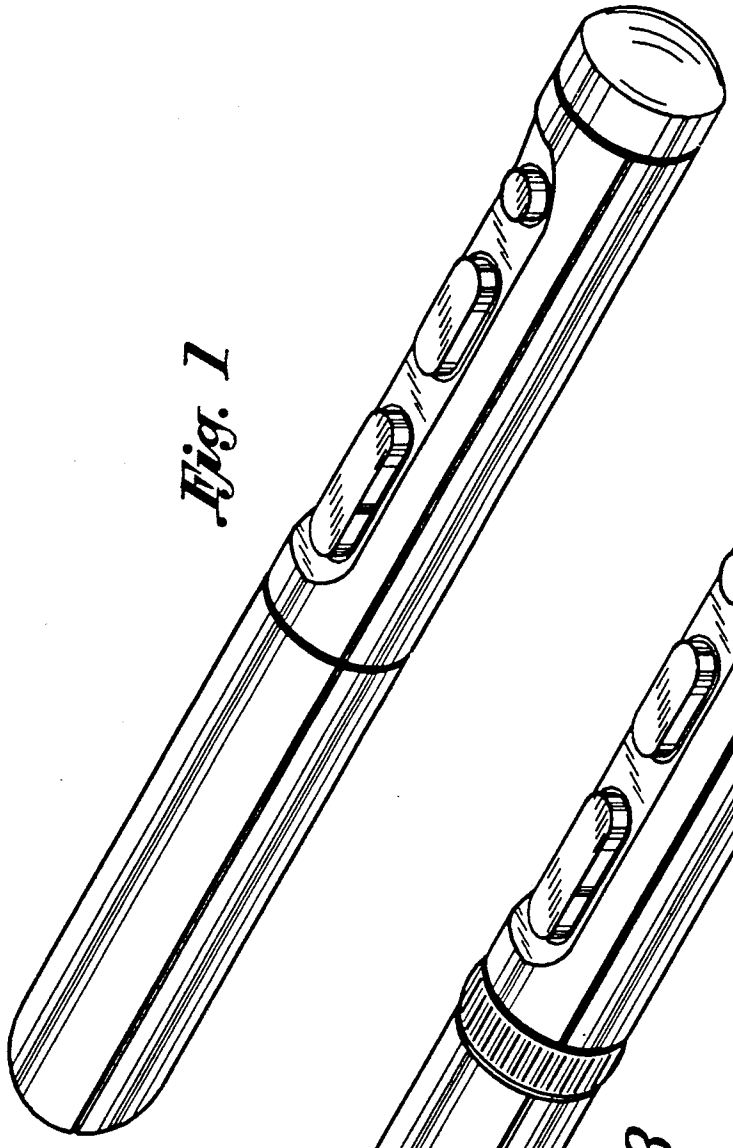

Fig. 1

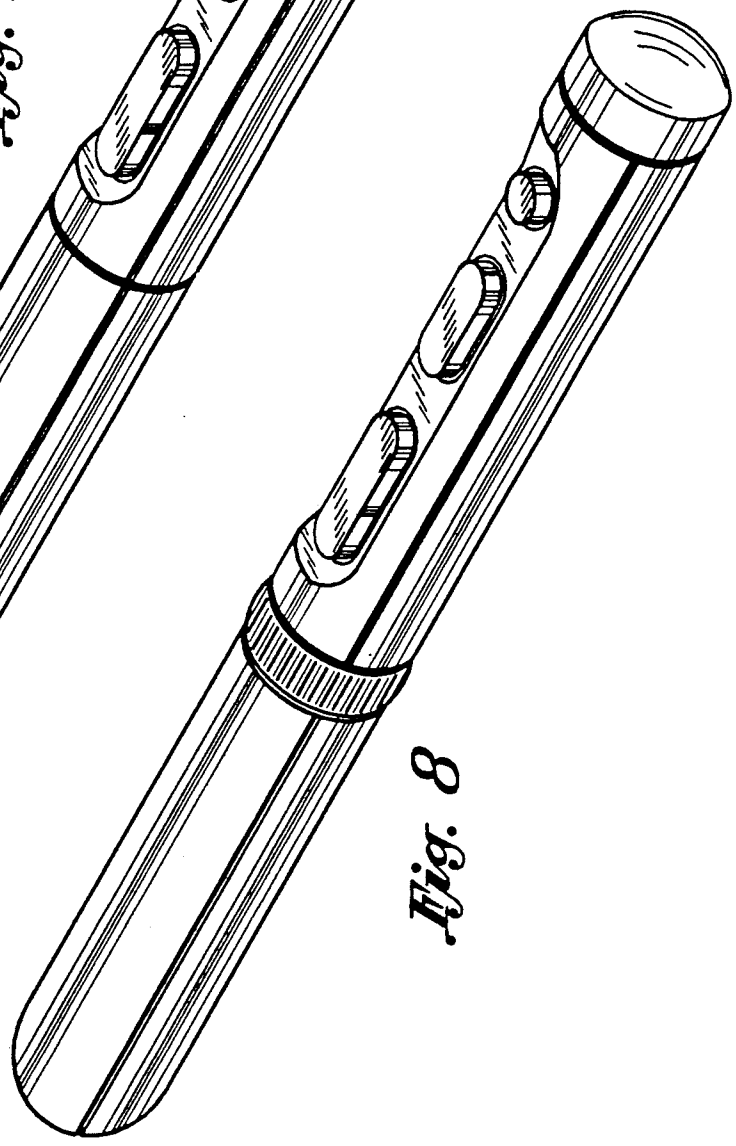

Fig. 8



Fig. 6

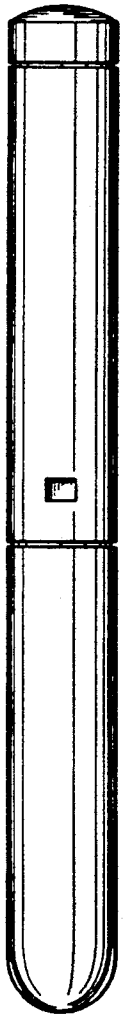

Fig. 2

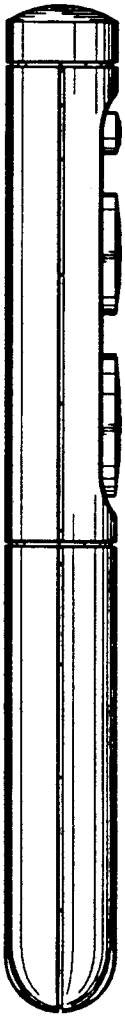

Fig. 3

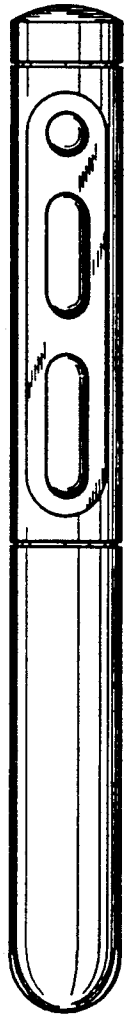

Fig. 4

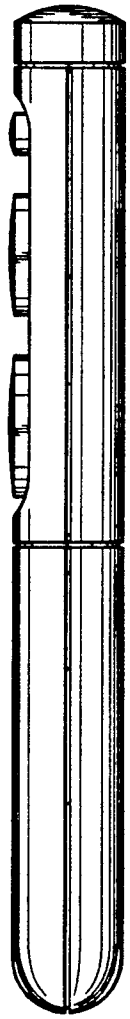

Fig. 5

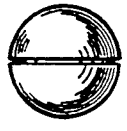

Fig. 7



Fig. 13

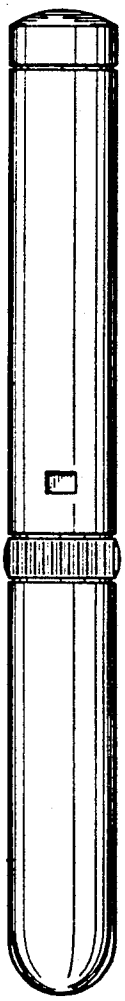

Fig. 9

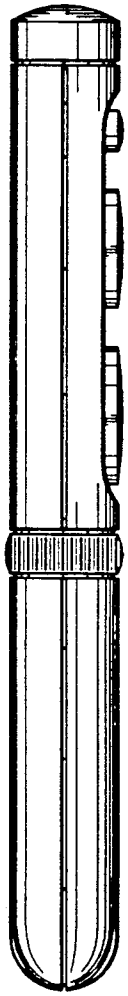

Fig. 10

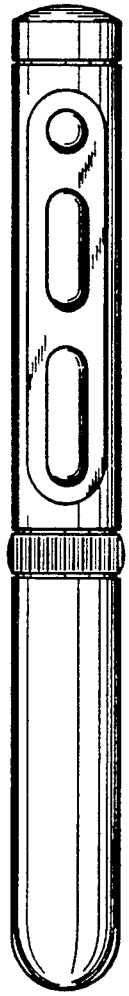

Fig. 11

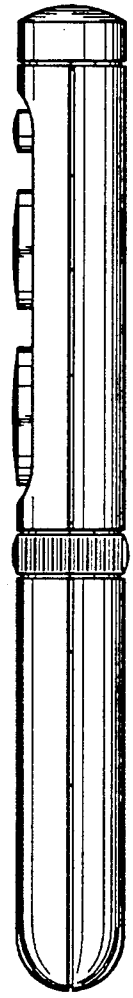

Fig. 12



Fig. 14