Nov. 30, 1937. T. U. WHITE 2,100,498

SIGNAL CONTROL CIRCUITS

Filed Oct. 10, 1932 3 Sheets-Sheet 1

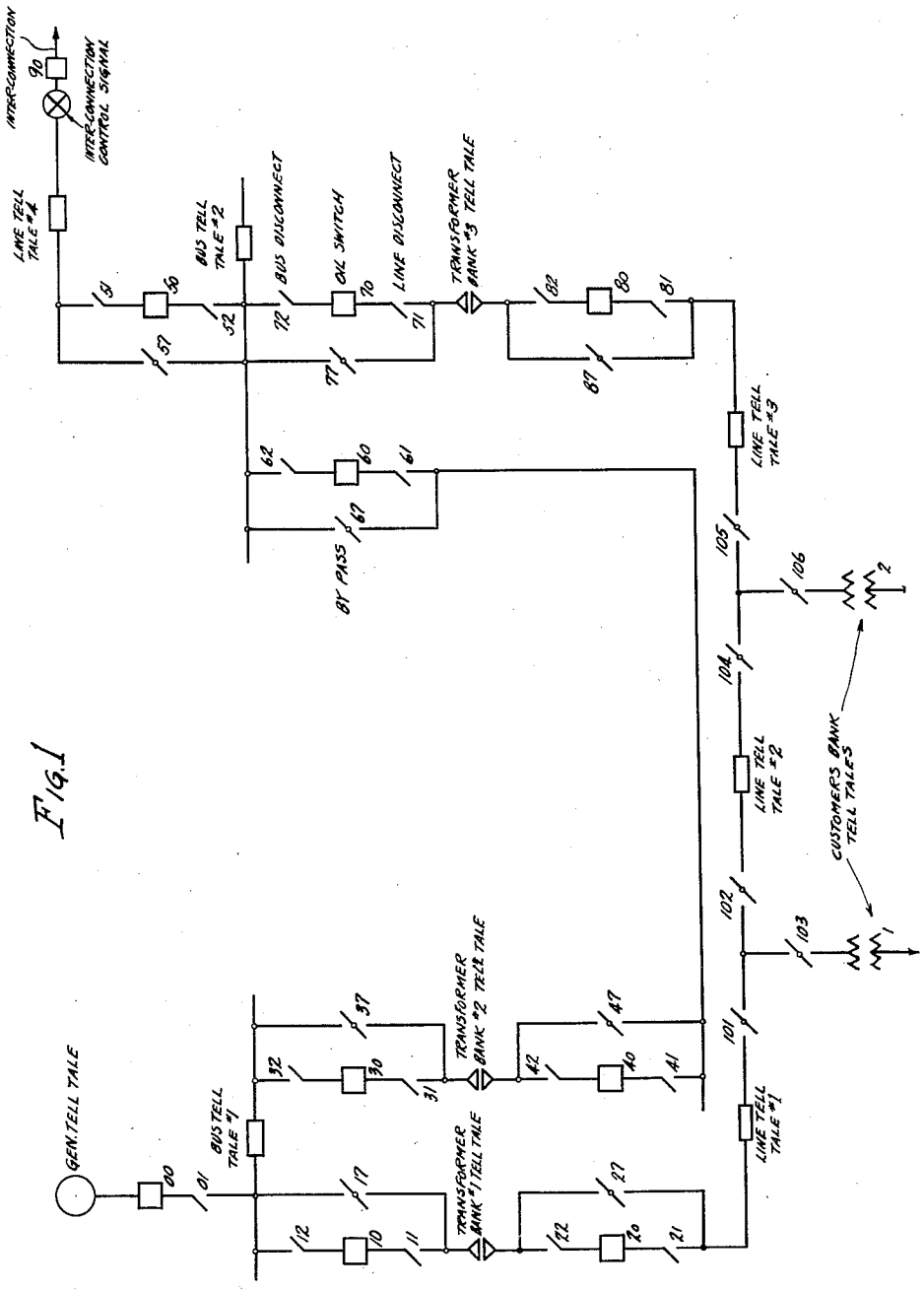

Fig. 1

— INVENTOR —
THOMAS U. WHITE
BY — Wm Watts Owen.
ATTY.

Nov. 30, 1937. T U. WHITE 2,100,498

SIGNAL CONTROL CIRCUITS

Filed Oct. 10, 1932 3 Sheets-Sheet 2

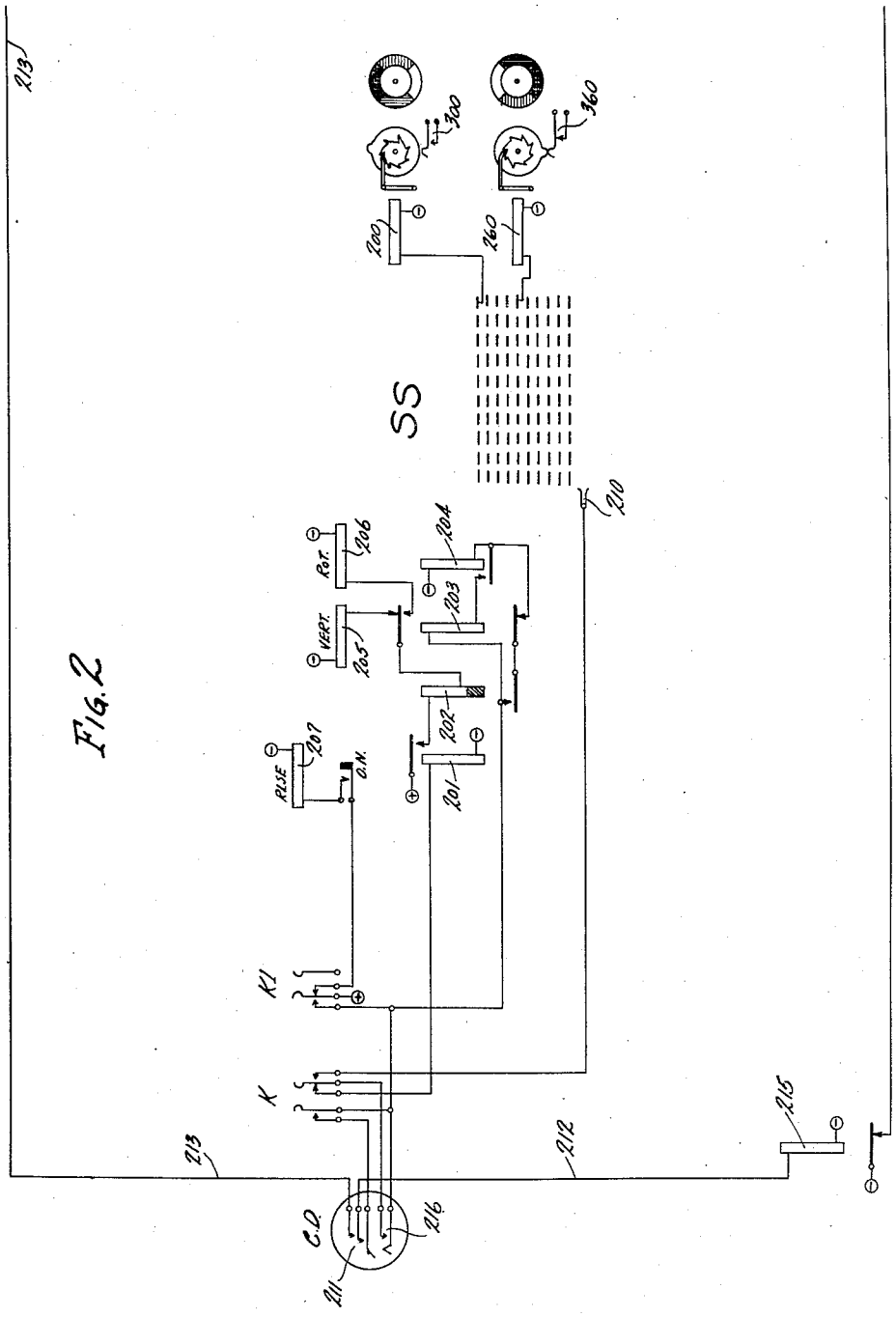

FIG. 2

— INVENTOR —
THOMAS U. WHITE
BY — Wm Watts Owen.
ATTY.

Nov. 30, 1937. T. U. WHITE 2,100,498

SIGNAL CONTROL CIRCUITS

Filed Oct. 10, 1932 3 Sheets-Sheet 3

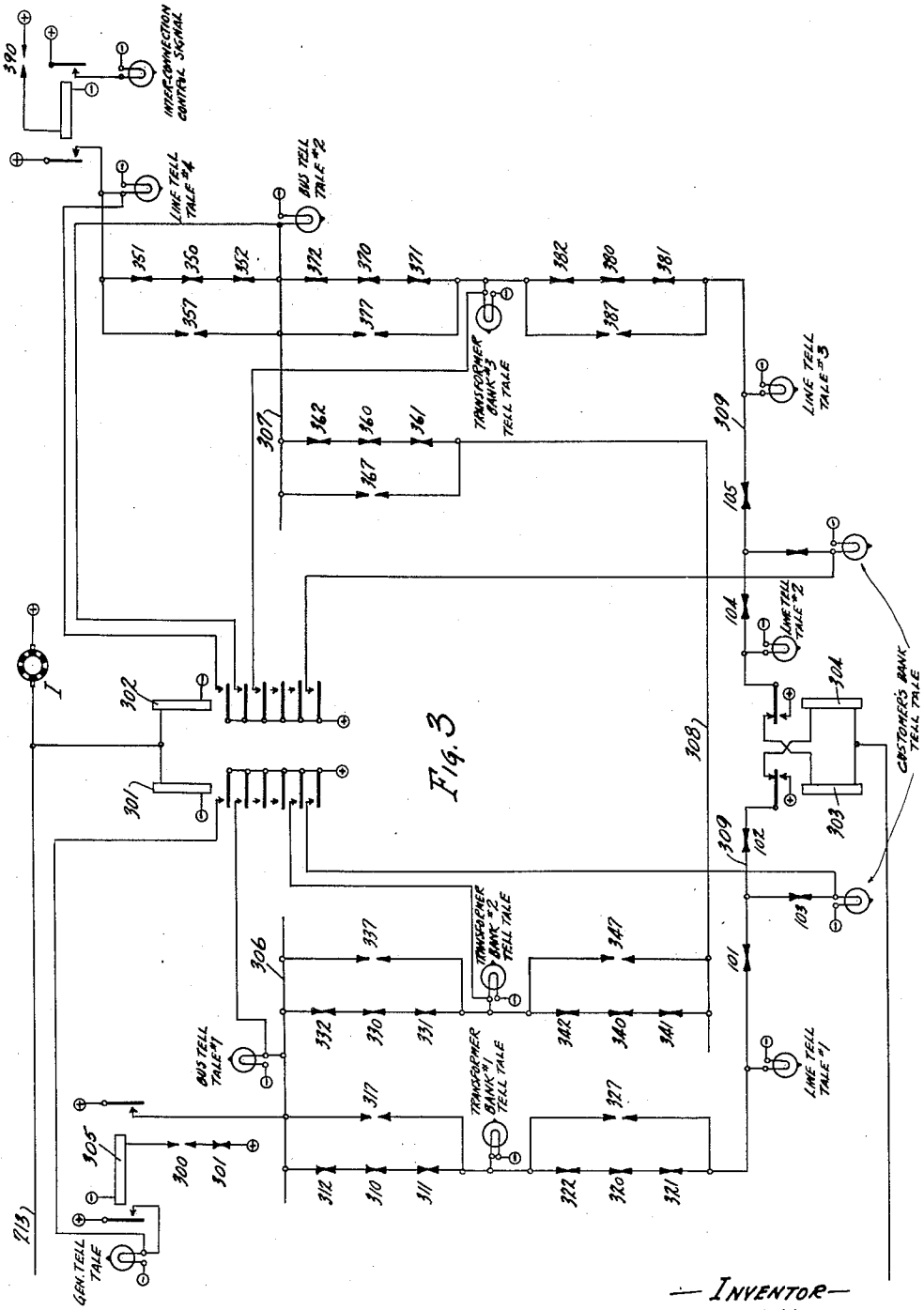

FIG. 3

— INVENTOR —
THOMAS U. WHITE
BY — Wm Walter Owen.
ATTY.

Patented Nov. 30, 1937

2,100,498

UNITED STATES PATENT OFFICE

2,100,498

SIGNAL CONTROL CIRCUITS

Thomas U. White, Chicago, Ill., assignor to Associated Electric Laboratories, Inc., Chicago, Ill., a corporation of Delaware

Application October 10, 1932, Serial No. 636,984

6 Claims. (Cl. 177—311)

The present invention relates in general to signal control circuits, but is particularly concerned with the provision of circuits and apparatus for protecting equipment of a low voltage signalling system in which the signalling circuits are of such a character as to require the frequent interruption of such circuits. Such circuits often include a number of multiple paths and carry a load which is great enough to produce excessive arcing at contact springs, employed frequently to interrupt points in the circuit which are common to the combined load of a number or all multiples of the circuit. In such circuit arrangements lamps are sometimes lighted over conductors extending a substantial distance from the source of current employed, causing a quite noticeable voltage drop. Certain of the protecting equipment of the present invention inherently, to a certain extent, overcomes this undesirable feature, incidental to its use for protecting purposes, but which may also be employed at strategic locations to assure uniform brilliancy of all the lamps of the system. In a chain circuit including a great number of switching contacts serving as a common feed conductor for a large number of lamps, sectionalizing relays are used to break up the chain circuit into smaller sections. The application of potential to one end of a section causes a relay at the other end of the section to apply potential to the adjacent section, and so on. With this arrangement small wire can be used on each section because of the smaller number of lamps in each section reducing the amperes in such sections. In addition, auxiliary circuits are established for the lamps while the switching contacts in the series circuit are being opened. These auxiliary circuits also shunt the switching contacts to temporarily carry the load so as to prevent injurious arcing at the operated contacts during their operation.

An object of the present invention is to provide sectionalizing means for such circuits to limit the loads carried by them, thus in effect enabling an unlimited number of multiple circuits to be controlled as one.

Another object is to provide sectionalizing means which will function to apply potential from either section to the other.

Another object is to provide a line sectionalizing equipment which may be employed in line loops without danger of the equipment being improperly locked up over such loops.

Another object is to provide circuit sectionalizing means which may also be employed as a current booster.

A further object is to provide load shunting circuits and apparatus which permits the safe and satisfactory use of contacts for controlling circuit loads which would not otherwise be satisfactory for the control of such loads.

The invention has been shown and described as a part of the circuits and apparatus of a power supervisory board. Fig. 1 of the drawings constitutes a map representing the apparatus and interconnections of a power net-work. This map may be built along the lines of the map shown in the co-pending White Patent No. 2,010,338, granted August 6, 1935. Fig. 2 diagrammatically illustrates the selecting equipment employed by the power supervisor in controlling the display signals and the symbols of the map shown in Fig. 1. Fig. 3, which should be placed to the right of Fig. 2, diagrammatically illustrates the circuits and apparatus directly and indirectly controlled by the supervisor to maintain the display condition of the map, shown in Fig. 1, in a display condition representing the condition of the actual equipment represented or a proposed change in the condition of the actual equipment.

Referring now particularly to Fig. 1, the manner of reading the map will be briefly explained. In the network illustrated in this figure, the source of current normally supplying the network is supplied from a generator, which, when active, is represented by the lighted condition of the symbol labeled "Gen. tell-tale" which is lighted by the lamps similarly labeled in Fig. 3. In an emergency, current from another network may be supplied to the present network at the point labeled "Interconnection". The various tell-tale symbols representing buses, lines, and transformer banks, have been labeled and can therefore be readily identified. These tell-tale symbols are provided with lamps, which, with their controlling circuits, are shown in Fig. 3. In Fig. 1 one each of the bus disconnect, line disconnect, by-path, and oil switches have been appropriately labeled so that any of such switches may be readily identified.

These various switch symbols are equipped with mechanical indicators of the type disclosed in the copending Obergfell Patent No. 1,966,042, granted July 10, 1934. Two of these indicators, 200 and 260, are diagrammatically shown in Fig. 2. The contacts on these indicators, as well as those not shown in Fig. 2, are shown in Fig. 3, and by their closed or open condition control the various tell-tale circuits at the same time that their semaphore cylinder causes their associated

symbol to indicate to the supervisor the open or closed condition of the apparatus represented.

The equipment shown in Fig. 2 comprises a Strowger switch SS of the well known vertical and rotary type, which responds to dial impulses to first select one of ten groups of contacts and which is then rotated to select a desired contact of such group. Only two mechanical indicators are shown connected to the bank of the switch shown in Fig. 2, but it should be understood that there is actually one of these devices for each of the switches represented in Fig. 1 and that each of these devices is equipped with contacts as shown in Fig. 3. The supervisor exercises full control over the selection and operation of the mechanical indicators, such as 260 and 200, by the use of the calling device CD, and keys K and K1, respectively. In the operation, the key K1 is first operated followed by the operation of the calling device to appropriately position wiper 210 of switch SS, after which the key K is operated enabling the subsequent operation of the calling device to operate the selected indicator, as will be subsequently more fully explained.

As previously mentioned, the equipment of Fig. 3 includes the tell-tale circuits and lamps used to light up certain symbols of the map shown in Fig. 1 and the tell-tale circuit controlling contacts of the mechanical indicators employed in conjunction with the symbols representing the switching devices. This figure, in addition, includes protective equipment including a pair of load shunting relays 301 and 302 which, through the medium of their contacts, provide individual circuits for the various tell-tale lamps of the board and which serve to carry the load required to light these lamps, while circuits, normally including a plurality of the indicator contacts in series, ordinarily carrying the load of these lamps are being opened and closed by the supervisor. The load shunting relays are also employed to cause any lamp otherwise deprived of current to intermittently flash so that the associated symbol will signify to the power supervisor the loss of current at such point in the system. Fig. 3 also contains a pair of line sectionalizing relays 303 and 304 employed to break up a long line into sections so as to limit the line load, thus enabling the use of relatively small line wires, which are much more readily employed in making the required connections to indicator and relay contacts. In arranging the circuits in this manner long lines are avoided and the relays 303 and 304 therefore serve as boosters maintaining an even brilliancy of the lamps of all line sections even when distributed over a comparatively large area on the board.

It will be noted from an inspection of Fig. 3 that the contacts 300 of the mechanical indicator, associated with the oil switch 00, are open and that, likewise, the contacts 390 of the mechanical indicator associated with the oil switch 90 at the interconnection with another system are likewise open. Therefore, the only current supplied to the board under these circumstances is that supplied through the contacts of relays 301 and 302 under control of the interrupter I. Accordingly, while this condition remains the tell-tale symbols of the board so equipped will intermittently flash and thus indicate to the supervisor the representation of a no current condition.

The supervisor changes the display condition of the board to agree with changes occurring in the field as he is advised of them, or for the purpose of setting up a proposed change which he believes necessary to the proper maintenance of service. It will be assumed that the supervisor has been advised from the field that the generator has been cut into service. The supervisor, accordingly operates his key K1 to its alternate position and dials the digits 00 required to position the wipers 210 of the Strowger switch SS into connection with the mechanical indicator 200 associated with the oil switch 00.

The off-normal contacts 211 of the calling device CD are closed during all stages of operation of the calling device and during such period positive potential is supplied through the left contacts of keys K1 and K to the conductors 212 and 213, respectively. The relay 215 accordingly becomes energized and removes negative potential from the windings of relays 303 and 304 to unlock either of these relays if they happen to be energized at this time. The application of positive potential to conductor 213 causes the relays 301 and 302 to maintain the various lamp signals of the board lighted steadily during the operation of the calling device.

When the first digit 0 is dialled the impulse springs 216 are closed ten times and accordingly ten impulses are transmitted from positive potential, supplied through the left contacts of key K1, through the impulse springs 216, through the right break contacts of key K, and the winding of relay 201 to negative potential. The relay 201 follows these impulses and repeats positive impulses to the vertical magnet 205 by way of slow release relay 202 and the upper break contacts of relay 203. The stepping mechanism driven by the vertical magnet 205, accordingly, elevates the wiper 210 opposite the tenth level of bank contacts. The slow release relay 202 remains energized during transmission of the impulse series and at its contacts completes the circuit of relay 204. This latter relay at its contacts prepares an operating circuit for relay 203 and a holding circuit for itself, which, however, is not effective until relay 202 restores following the complete transmission of the first digit. The relay 203, upon operating, transfers the operating circuit of the switch from the vertical magnet 205 to the rotary magnet 206 so that the second series of impulses transmitted by the calling device is transmitted to the rotary magnet which, through the medium of its associated mechanism, moves the wiper 210 into engagement with the tenth contact of the selected level.

The wiper 210 now being connected with the mechanical indicator 200, associated with the oil switch symbol 00, is available for operation by the supervisor. The supervisor now operates key K to its alternate position, which substitutes the conductor extending to wiper 210 for the conductor extending to the impulsing relay 201. It will be appreciated therefore that any subsequent operations of the calling device CD will cause positive potential impulses to be transmitted to the wiper 210 and to the winding of the indicator 200. The supervisor under the circumstances assumed, transmits the required impulses to bring the cam of the indicator into the proper position to close the contacts 300 in which position the drum of the indicator appropriately displays a color representing the closed position of the represented switch. As a result of the closure of contacts 300, tell-tale relay 305 becomes energized and at one pair of its contacts closes the circuit of the lamp labeled Gen. tell-tale, associated with the generator tell-tale symbol, thus indicat-

ing on the map that the generator is now connected to the network. The relay **305** also applies positive potential to the line **306**, and since all of the bus disconnect, line disconnect, and oil switches in the left section of the network are shown as being closed, this positive potential is applied directly to the transformer bank No. 1 tell-tale lamp, the line tell-tale #1 lamp, the customer's bank tell-tale lamp and to the winding of relay **304**. This relay upon operating, since all of the mechanical indicators in the right hand section of the network are illustrated as being closed, excluding the one at the interconnection, supplies positive potential to the lamps included in this section of the network. It will be seen, therefore, that, although the positive potential is being intermittently applied through the interrupter I to the relays **301** and **302**, the operation of these relays will be without effect so long as current is steadily applied from other sources direct to the lamps.

The described operations would have been substantially the same had the supervisor decided to close the contacts of the oil switch **90** at the interconnection instead of employing current from the generator of the network.

It will now be assumed that the supervisor has been advised that the oil switch **60** has been tripped and that he desires to ascertain the effect of this change on the service. He accordingly operates key K1, transmits the digit 60, by operating the calling device as before, and in so doing, connects the wiper **210** with the mechanical indicator **260** associated with the oil switch symbol **60**. He then operates key K and the calling device as required to open the contacts **360** of the mechanical indicator, and to position such indicator as required to represent the open condition of the represented oil switch **60** on the display map. It should be noted that, in the network shown, current is being supplied from the generator source to the line conductor **307** by two paths, namely, by way of the line conductor **306** and conductor **308**, comprising the path interrupted by the opening of the oil switch **60**; and by the second path including the conductor **309** and a series of oil and disconnect switches which are still closed. Therefore, the opening of the oil switch **60** is without effect except that there may be a deficiency of current supplied to the line conductor **307** under some circumstances. Therefore, in a system as shown, no change in the condition of the tell-tale symbols occurs at this time.

It will now be assumed that the generator is disconnected from the system and that the supervisor, being so advised, selects and operates the mechanical indicator **200** to again open the contacts **300**. Upon opening the contacts **300** the tell-tale relay **305** becomes deenergized and the generator symbol lamp is accordingly extinguished. It will be seen that when positive potential was applied to the line conductor **306** when the relay **305** was energized and with the consequent energization of the sectionalizing relay **304**, as previously described, positive potential was supplied from this relay over the right section of conductor **309** to the line **307**, back over line **308** and through the switching apparatus to the line **306**. Therefore, unless some special arrangements are provided the deenergization of relay **305** will not result in the removal of positive potential from this loop circuit which now includes the winding of relay **304**. It will be noted, however, that upon each operation of the calling device to perform the selection of a mechanical indicator the relay **215** removes negative potential from the sectionalizing relays **303** and **304** and in this manner insures their deenergization occurring each time a selection is made. These relays therefore can never remain locked up in a loop circuit such as described.

If special provisions are not provided, the opening of right-hand contacts of relay **305**, which at times may carry the load of a large number of lamps, will result in excessive arcing, resulting in damage to these contacts. The same holds true as regards the various contacts of the mechanical indicators. This is especially true of more elaborate systems than the one disclosed, as such systems involve the use of a large number of lamps. The prevention of arcing of contacts included in circuits carrying loads too large to safely break, is taken care of by the relays **301** and **302**. These relays, as previously explained, are maintained energized during the operation of the calling device CD and establish individual circuits for the various lamps of the system during the time any of the chain circuits are being broken. In other words, the relays **301** and **302** may be termed load-shunting relays for the reason that they shunt the load from the contacts normally carrying it while such contacts are being opened.

The selecting switch SS of Fig. 2, after each operation, is released consequent to the restoration of key K1 which closes a circuit for the release magnet **207** by way of the off normal springs ON. These off normal springs are automatically opened consequent to the restoration of the switch wipers to their normal position.

What is claimed is:

1. In a signalling system, a plurality of signals, circuits for said signals including a circuit connected to all of said signals, signal control contact sets interspersed throughout the length of said circuit, means for operating any set of said contacts to interrupt the circuits of one or a plurality of said signals depending upon the contact set operated, auxiliary circuits for all signals, and means for closing said auxiliary circuits consequent to the actuation of said first means and until the desired set of said contact sets has been opened, each auxiliary circuit including only sufficient current flow to operate one signal.

2. In a signalling system, a plurality of contact sets connected in series relation in a current feed conductor, a plurality of indicating devices energized over circuits including parts of said conductor and one or a plurality of the contact sets depending upon their point of connection with said conductor and the feed point or points of the conductor, means for operating any desired set of said plurality of contact sets to interrupt the circuits of those devices included in the interrupted portion of the common circuit, auxiliary circuits for said indicating devices, and means for completing said auxiliary circuits to maintain such devices energized until after the interruption of the series circuit, each auxiliary circuit carrying less current than said conductors.

3. In a signalling system, a multi-branch signalling circuit, contacts connecting the branches in said circuit, signals included in said branches, means for energizing said signals over said branches, shunting circuits for shunting said branches, each shunting circuit carrying less current than the branch circuit which it shunts,

means for operating any of said contacts to disconnect one or a plurality of said branches from said circuit, and means operated responsive to the operation of said means for completing said shunting circuits to shunt said branches and to maintain said signals energized during the actuation of said first means.

4. In a signalling system, a signalling circuit including a plurality of branches, contacts connecting said branches in said circuit, signals connected to said branches, means for connecting a potential to said circuit to energize said signals over said branches, means for operating any of said contacts to disconnect one or a plurality of said branches from said circuit dependent upon the contact operated, and means operated responsive thereto for connecting said potential directly to each branch to maintain said signals energized and to thereby prevent the opening of any circuit carrying as much current as the branches and thus prevent arcing at the operated contacts during the operation of any of said contacts.

5. In a signalling system, a plurality of signals, a common circuit for certain of said signals, contacts in said circuit, a selecting means for selecting and controlling any of said contacts to open or close said circuit at different points to light said signals in groups, an impulse sender for controlling said selecting means, a relay controlled by each operation of said impulse sender for closing a direct circuit for each of said signals in shunt of said contacts, said direct circuit closed only while the impulse sender is operating.

6. A signalling system as claimed in claim 5 in which there is means for intermittently operating said relay while said impulse sender is not operating to flash the lamps not otherwise lighted.

THOMAS U. WHITE.