(12) INTERNATIONAL APPLICATION PUBLISHED UNDER THE PATENT COOPERATION TREATY (PCT)

(19) World Intellectual Property Organization
International Bureau

(43) International Publication Date
14 January 2021 (14.01.2021)

WIPO | PCT

(10) International Publication Number
WO 2021/005442 A1

(51) International Patent Classification:
H01L 27/32 (2006.01)

(21) International Application Number:
PCT/IB2020/055988

(22) International Filing Date:
24 June 2020 (24.06.2020)

(25) Filing Language: English

(26) Publication Language: English

(30) Priority Data:
62/872,832 11 July 2019 (11.07.2019) US
62/901,453 17 September 2019 (17.09.2019) US

(71) Applicant: **KING ABDULLAH UNIVERSITY OF SCIENCE AND TECHNOLOGY** [SA/SA]; 4700 King Abdullah University of Science and Technology, Thuwal, 23955-6900 (SA).

(72) Inventors: **HE, Jr-Hau**; 4700 King Abdullah University of Science and Technology, Thuwal, 23955-6900 (SA). **LIN, Chun-Ho**; 4700 King Abdullah University of Science and Technology, Thuwal, 23955-6900 (SA). **LI, Ting-You**; 4700 King Abdullah University of Science and Technology, Thuwal, 23955-6900 (SA). **XU, Xuezhu**; 4700 King Abdullah University of Science and Technology, Thuwal, 23955-6900 (SA).

(81) Designated States *(unless otherwise indicated, for every kind of national protection available)*: AE, AG, AL, AM, AO, AT, AU, AZ, BA, BB, BG, BH, BN, BR, BW, BY, BZ, CA, CH, CL, CN, CO, CR, CU, CZ, DE, DJ, DK, DM, DO, DZ, EC, EE, EG, ES, FI, GB, GD, GE, GH, GM, GT, HN, HR, HU, ID, IL, IN, IR, IS, JO, JP, KE, KG, KH, KN, KP, KR, KW, KZ, LA, LC, LK, LR, LS, LU, LY, MA, MD, ME, MG, MK, MN, MW, MX, MY, MZ, NA, NG, NI, NO, NZ, OM, PA, PE, PG, PH, PL, PT, QA, RO, RS, RU, RW, SA, SC, SD, SE, SG, SK, SL, ST, SV, SY, TH, TJ, TM, TN, TR, TT, TZ, UA, UG, US, UZ, VC, VN, WS, ZA, ZM, ZW.

(84) Designated States *(unless otherwise indicated, for every kind of regional protection available)*: ARIPO (BW, GH, GM, KE, LR, LS, MW, MZ, NA, RW, SD, SL, ST, SZ, TZ, UG, ZM, ZW), Eurasian (AM, AZ, BY, KG, KZ, RU, TJ, TM), European (AL, AT, BE, BG, CH, CY, CZ, DE, DK, EE, ES, FI, FR, GB, GR, HR, HU, IE, IS, IT, LT, LU, LV, MC, MK, MT, NL, NO, PL, PT, RO, RS, SE, SI, SK, SM, TR), OAPI (BF, BJ, CF, CG, CI, CM, GA, GN, GQ, GW, KM, ML, MR, NE, SN, TD, TG).

(54) **Title:** PEROVSKITE QUANTUM DOT PAPER FOR LIGHT-EMITTING DEVICE AND METHOD

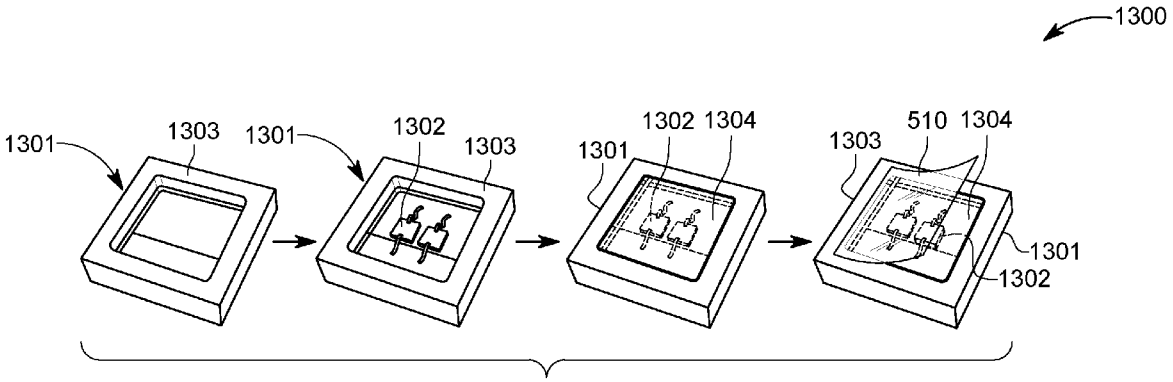

FIG. 13

(57) **Abstract:** A light emitting device (1300) configured to emit white light, wherein the device includes a base (1302); a blue light emitting chip (1304) attached to the base (1302) and configured to generate blue light; a red light layer (1306) located over the blue light emitting chip (1304) and configured to emit red light; and a perovskite quantum dot paper layer (1306) located over the red light layer. The perovskite quantum dot paper layer (1306) is configured to emit green light.

WO 2021/005442 A1

[Continued on next page]

Published:

— *with international search report (Art. 21(3))*
— *before the expiration of the time limit for amending the claims and to be republished in the event of receipt of amendments (Rule 48.2(h))*
— *in black and white; the international application as filed contained color or greyscale and is available for download from PATENTSCOPE*

PEROVSKITE QUANTUM DOT PAPER FOR LIGHT-EMITTING DEVICE AND METHOD

CROSS-REFERENCE TO RELATED APPLICATIONS

[0001] This application claims priority to U.S. Provisional Patent Application No. 62/872,832, filed on July 11, 2019, entitled "PEROVSKITE QUANTUM DOT PAPER FOR LIGHT-EMITTING DIODE APPLICATION," and U.S. Provisional Patent Application No. 62/901,453, filed on September 17, 2019, entitled "PEROVSKITE QUANTUM DOT PAPER FOR LIGHT-EMITTING DEVICE AND METHOD," the disclosures of which are incorporated herein by reference in their entirety.

BACKGROUND

TECHNICAL FIELD

[0002] Embodiments of the subject matter disclosed herein generally relate to perovskite quantum dots (PQDs) formed in a paper, and more particularly, to a display that uses PQDs paper for generating light.

DISCUSSION OF THE BACKGROUND

[0003] Over the past decade, significant effort has been devoted to the development of highly-efficient and long-lasting white light emitting diodes (LEDs) for room lighting and display technologies (e.g., screens for TVs, mobile devices, laptops, etc.). The colloidal quantum dot (QD) LEDs, which are emerging as the

next generation after the conventional semiconductor and organic LEDs, are considered the next step forward in the display market, due to their narrow emission spectra, tunable emission wavelength, and small dimensions. These factors play a determining role in shrinking the pixel sizes for micro-LED displays. Among a variety of QDs, the hybrid halide perovskite ($MAPbX_3$, MA = $CH_3NH_3^+$; X = Cl^-, Br^- or I^-) QD is a promising candidate for next-generation lighting applications due to its high quantum yield and impressive color purity, particularly at green wavelengths [1], [2], and [3]. The quantum yield of liquid phase perovskite QDs is typically greater than 80%, with the record high reaching 100% efficiency. Additionally, most PQDs feature a full width at half maximum (FWHM) of less than 30 nm, which is favorable for improving the color purity of displays.

[0004] To date, various PQD-based white LEDs have been reported using diverse structural designs that feature different advantages and disadvantages. Due to the instability of PQDs under moisture, thermal variations, and high-energy radiation conditions, it is not currently possible to utilize them in efficient and stable LED structures.

[0005] Generally, PQDs serve as either the active light emitting material [4], [5] or the color converter [6], [7] in LEDs. However, previous studies have demonstrated that the operation lifetime of the converter-type PQD LEDs is significantly better than the lifetime of the devices based on the active light emission mechanism because PQDs are fairly unstable under continuous electrical excitation.

[0006] Converter-type PQD LEDs can be classified into three categories, including QD enhancement film (QDEF) devices 100, as illustrated in Figure 1, QD

color filters devices 200 as illustrated in Figure 2, and on-chip QDs devices 300 as illustrated in Figure 3. Figure 1 shows the QDEF LED device 100 including a blue LED layer 102 that is configured to emit blue light. The blue light emitted in the layer 102 is then passing through the QDEF film 104, which is configured to improve the properties of the blue light. Next, the light is passing through an optical film 106, which controls the characteristics of the light (e.g., antireflection layer) and is also passing through an LCD layer 108, which is configured to enhance the light. A color filter 110 is provided at the top of the device for generating the red and green light, in addition to the existing blue light, to obtain the final white light. The QD color filter LED device 200 is similar to the device 100, except that the filter layer 210 includes the quantum dots, while the on-chip QD LED device 300 has the quantum dots formed into the light emitting layer 302.

[0007] QDEF devices 100 have already been mass produced by several TV manufacturers [8], [9], in which large-area PQD films 104 are placed over the entire display. However, QDEF LED devices 100 are costly due to the large amounts of PQDs used. The QDEF structure can also lead to high optical loss, for example, more than 10%, which suppresses the device's efficiency. Compared to the QDEF device 100, the PQD color filter design of the device 200 features higher efficiency. However, for the QD color filter LED device 200, it is not easy to solve the cross-talk issue between the red, green, and blue color filters.

[0008] On-chip QD LED devices 300 are preferable in display applications because of their high device performance, low-production cost, and simple fabrication process. For these devices, the QDs are coated on the blue LED chip

302 or the top of the LED package. However, the high-energy radiation of the blue LEDs can lead to thermal quenching and photo-degradation of the PQDs, thus hindering their practical application. These issues also cause the low-luminous efficiency of the on-chip PQD LED devices 300 (~50 lm/W), which is much lower than that of conventional phosphor-based LEDs. In addition, controlling the uniformity and the QDs density in the QD film 302 is also challenging. Spin-coating is a conventional fabrication method, however, it is limited to wafers and leads to high-production cost due to material waste during the coating process. Ink-jet printing is also problematic due to the slow production rates and the difficulty in fabricating pixel sizes less than 10 μm.

[0009] As a result of these problems that plaque the existing PQDs based devices, there is a need for a PQD film that can be made using cost-effective and scalable manufacturing techniques, and is also sufficiently stable to withstand high-energy radiation and to improve the luminous efficiency of the on-chip PQD LED devices 300.

BRIEF SUMMARY OF THE INVENTION

[0010] According to an embodiment, there is a light emitting device configured to emit white light, where the device includes a base, a blue light emitting chip attached to the base and configured to generate blue light, a red light layer located over the blue light emitting chip and configured to emit red light, and a perovskite quantum dot paper layer located over the red light layer. The perovskite quantum dot paper layer is configured to emit green light.

[0011] According to another embodiment, there is a method for making a perovskite quantum dot paper layer that emits green light, the method including providing cellulose nanocrystals; providing perovskite-based quantum dots; mixing the cellulose nanocrystals with the perovskite-based quantum dots; and making the perovskite quantum dot paper.

[0012] According to still another embodiment, there is a method for making a white light emitting device, where the method includes providing a base; attaching a blue light emitting chip to the base, wherein the blue light emitting chip is configured to generate blue light; placing a red light layer over the blue light emitting chip, where the red light layer is configured to emit red light; and placing a perovskite quantum dot paper layer over the red light layer, where the perovskite quantum dot paper layer is configured to emit green light.

BRIEF DESCRIPTION OF THE DRAWINGS

[0013] For a more complete understanding of the present invention, reference is now made to the following descriptions taken in conjunction with the accompanying drawings, in which:

[0014] Figures 1-3 illustrate traditional quantum dot based light emitting diodes;

[0015] Figure 4 is a flowchart of a method for making a perovskite quantum dot paper that emits green light;

[0016] Figure 5 illustrates various steps of the method for making the perovskite quantum dot paper;

[0017] Figure 6 illustrates the structure of the paper in the perovskite quantum dot paper;

[0018] Figure 7 shows a cross-section of the perovskite quantum dot paper;

[0019] Figure 8 illustrates the quantum dots in the perovskite quantum dot paper;

[0020] Figure 9 shows X-ray diffraction patterns of the perovskite quantum dot paper and pure cellulose nanocrystals paper;

[0021] Figure 10 shows the photoluminescence emission and the ultraviolet-visible absorption spectra of the perovskite quantum dot paper;

[0022] Figure 11 illustrates the quantum yield of the perovskite quantum dot paper;

[0023] Figure 12 illustrates the flexibility of the perovskite quantum dot paper;

[0024] Figure 13 illustrates a perovskite quantum dot paper based light emitting device;

[0025] Figure 14 illustrates the electroluminescence spectra of the perovskite quantum dot paper-based white light emitting device at different drive currents;

[0026] Figure 15 illustrates the luminous efficiency and the luminous flux of a perovskite quantum dot paper-based LED device;

[0027] Figure 16 illustrates a degradation of the luminous flux versus time for various LED devices;

[0028] Figures 17A and 17B illustrate the light efficiency and the lifetime of various LED devices;

[0029] Figure 18 lists the characteristics of the various LED devices compared in Figures 17A and 17B;

[0030] Figure 19 illustrates the normalized intensity versus temperature for commercial quantum dot-based devices and the perovskite quantum dot paper-based LED device;

[0031] Figure 20 illustrates the operation lifetime and radiation performance of quantum dot-based white LEDs;

[0032] Figure 21 illustrates a perovskite quantum dot paper-based LED device that has a curved perovskite quantum dot paper;

[0033] Figure 22 illustrates a variation of the viewing angle of the perovskite quantum dot paper-based LED device with a curvature of the perovskite quantum dot paper;

[0034] Figures 23A and 23B illustrate the radiant intensity versus the viewing angle for the flat perovskite quantum dot paper-based LED device and a curved perovskite quantum dot paper-based LED device;

[0035] Figure 24 is flowchart of a method for making a perovskite quantum dot paper; and

[0036] Figure 25 is a flowchart of a method for making a perovskite quantum dot paper-based LED device.

DETAILED DESCRIPTION OF THE INVENTION

[0037] The following description of the embodiments refers to the accompanying drawings. The same reference numbers in different drawings identify the same or similar elements. The following detailed description does not limit the invention. Instead, the scope of the invention is defined by the appended claims. The following embodiments are discussed, for simplicity, with regard to an LED that uses $CH_3NH_3PbBr_3$ for generating green light. However, the embodiments to be discussed next are not limited to this material, but other perovskite type materials may be used instead or in addition to $CH_3NH_3PbBr_3$.

[0038] Reference throughout the specification to "one embodiment" or "an embodiment" means that a particular feature, structure or characteristic described in connection with an embodiment is included in at least one embodiment of the subject matter disclosed. Thus, the appearance of the phrases "in one embodiment" or "in an embodiment" in various places throughout the specification is not necessarily referring to the same embodiment. Further, the particular features, structures or characteristics may be combined in any suitable manner in one or more embodiments.

[0039] According to an embodiment, a paper fabrication process that incorporates perovskite is introduced and this process uses cellulose nanocrystals (CNCs) to produce a new type of PQD film, which is called herein PQD paper. CNC is naturally organized in an ordered crystalline structure, which provides strong mechanical strength to the paper. Moreover, the capping ligands of the CNC play a

role in ligand-assisted reprecipitation to confine the growth of the perovskite to QD structures [10]. Using a fast, scalable, and inexpensive paper fabrication process, the resulting PQD paper is uniform, high-quality, and stable, providing an excellent material for advanced PQD LED devices.

[0040] In one embodiment, the perovskite used to generate the QDs is $CH_3NH_3PbBr_3$. As discussed later, a combination of different perovskites may be used. The fabricated $CH_3NH_3PbBr_3$ PQD paper was found to possess a peak emission wavelength at 518 nm and a narrow FWHM of 28 nm, which is suitable for acting as a green color converter. By incorporating this novel PQD paper with a red $K_2SiF_6:Mn^{4+}$ (KSF) phosphor and a blue LEDs, it is possible to achieve white LEDs featuring a wide color gamut of 123% of the National Television System Committee (NTSC) standard and a high luminous efficiency of 124 lm/W, which is the record efficiency for PQD-based LEDs.

[0041] It was found by the inventors that for the novel PQD paper to be discussed herein, the capping ligands of the CNC ($-HSO_3^-$ and $-O^-$) complex with the PQDs in the paper structure, which improves their stability. As a result, a PQD paper-based LED device is able to maintain 87.6% luminous flux after continuous operation for 240 h. Furthermore, benefiting from the flexible nature of this paper, the use of curved PQD paper can further increase the viewing angle of the LED from 120° to 143° when compared to the normal flat design. With superior optical properties, excellent stability, robust flexibility, and the capability to realize highly efficient emission, the novel PQD paper exhibits excellent potential for future solid-state lighting.

[0042] A method for forming the novel PQD paper is now discussed with regard to Figures 4 and 5. In step 400, CNC is provided. CNC is also called nanocellulose, or cellulose nanofibers (CNF), or microfibrillated cellulose (MFC), and can be prepared from any cellulose source material, but wood pulp is normally used. The nanocellulose fibrils may be isolated from the wood-based fibers using mechanical methods which expose the pulp to high shear forces, ripping the larger wood-fibers apart into nanofibers. For this purpose, high-pressure homogenizers, ultrasonic homogenizers, grinders or microfluidizers can be used. In this regard, note that the CNC is different from the ordinary paper. The homogenizers are used to delaminate the cell walls of the fibers and liberate the nanosized fibrils. One skilled in the art will understand that the CNC may be generated in various ways, from many possible materials (e.g., wood, cotton, etc.), but the CNC cannot be substituted with ordinary paper to achieve the PQDs paper noted above. The term CNC is used herein to include any cellulose material that is processed to have nanocrystals and/or nanowires and/or nanofibers, which the ordinary paper does not.

[0043] In step 402, the CNC is mixed with an organic compound (for example, dimethylformamide (DMF)) to form a first suspension 500, as illustrated in Figure 5. In step 404, the $CH_3NH_3PbBr_3$ is provided. Note that it is possible in step 404 to provide instead of pure $CH_3NH_3PbBr_3$, a combination of two or more of $CH_3NH_3PbBr_3$, $CH_3NH_3PbCl_3$, and $CH_3NH_3PbI_3$, depending on the type of light that is desired to be generated by the PQD paper. These compounds are generically identified in the following as $CH_3NH_3PbX_3$. In this regard, note that $CH_3NH_3PbBr_3$ is rich in green while the other compounds based on Cl and I are not so rich in green.

Any combination of these compounds may be used to obtain a desired wavelength generated by the PQD paper. In step 406, the $CH_3NH_3PbBr_3$ is mixed with an organic compound, for example, DMF, to form a second suspension 502, as illustrated in Figure 5.

[0044] In step 408, the first and second suspensions 500 and 502 are mixed together to form a CNC/perovskite mixture 504. The CNC/perovskite mixture 504 is then filtered in step 410 through a membrane 506. The solid part 508 of the mixture 504 remains on top of the membrane 506, as shown in Figure 5. This solid part is then dried in step 412, on top of the membrane, for a given amount of time, for example, 24 h. During the drying process, the abundant $-HSO3^-$ and $-O^-$ capping ligands of the CNC suspension 502 confine the crystallization of the perovskite to QD structures through ligand-assisted reprecipitation [10]. The resulting PQD paper 510 can be peeled off in step 414, from the membrane 506, as shown in Figure 5. The PQD paper 510 can now be used in an LED device for producing white light, as discussed later.

[0045] An example of a specific implementation of the method for forming the PQD paper is now discussed. The following specific values are presented as an example, and not to limit the invention. In this embodiment, to prepare the cellulose suspension, the inventors have mixed 210 mg of freeze-dried CNCs with 20 ml of anhydrous dimethylformamide solution, followed by a sonication treatment for 2 h. For the perovskite solution, an equimolar amount of CH_3NH_3Br and $PbBr_2$ powders were dissolved in anhydrous dimethylformamide with a molar concentration of 0.5 M each and were stirred at 90 °C for 24 h. Then, 1 ml of perovskite solution was added

to 7 ml of the CNC suspension and the solution was placed in a sonication bath for 2 h. The mixed solution was filtered through a filter membrane (e.g., 20 nm pore) that was installed on a vacuum filter setup. The CNC/perovskite material was collected on the filter membrane and dried for 24 h under continuous vacuum pumping to obtain the PQD paper. Finally, the PQD paper was removed from the membrane.

[0046] The quality of the PQD paper 510 has been evaluated by the inventors using various techniques, as now discussed. In one embodiment, a scanning electron microscopy (SEM) was used to observe the surface morphology of the PQD paper 510, which demonstrated the entangled CNC structure 600 as shown by Figure 6. These CNCs 600 provide the PQD paper 510 with unique mechanical strength and flexibility. Furthermore, a cross-sectional SEM image of the PQD paper shown in Figure 7 reveals that the thickness T of the PQD paper 510 is about 45 μm.

[0047] The presence of the PQDs 512 was observed using transmission electron microscopy (TEM), as shown in Figure 8. The sizes of the PQDs 512 were approximately 3–8 nm in this experiment, which should provide a strong quantum confinement effect and enhance the light emission of the perovskite. In this regard, note that the quantum confinement occurs when the material has at least one dimension close to or smaller than the two times of its exciton Bohr radius, which is about 2 nm.

[0048] The X-ray diffraction (XRD) patterns of the $CH_3NH_3PbBr_3$ PQD paper 510 and pure CNC paper 600 are shown in Figure 9 as curves 900 and 910, respectively. Both samples show strong diffraction peaks 902 and 912 at 23° (the figure shows the normalized intensity versus angle), which is caused by the CNC

material 600, while the PQD paper 510 reveals additional peaks 904, 906, and 908, which appear at 15°, 30°, and 34°, respectively. These additional peaks 904, 906, and 908 are assigned to the (001), (200), and (210) crystal planes of the CH_3NH_3PbBr QDs, confirming the high-purity of the PQDs in the paper.

[0049] Figure 10 illustrates the photoluminescence (PL) emission (see curve 1000) and the ultraviolet-visible (UV-Vis) absorption spectra (see curve 1010) of the $CH_3NH_3PbBr_3$ PQD paper 510. The PQD paper 510 exhibits bright green PL emission (note that the PL emission curve 1000 is centered on the green wavelength) with a FWHM of 28 nm and a peak wavelength of 518 nm, which corresponds to the sharp absorption edge cut-off of the PQD paper. The strong absorption exhibited by curve 1010 in the short wavelength region confirms the capability of the PQD paper 510 to act as a color converter for blue GaN LED chips. Additionally, using a 450 W xenon lamp and a spectrometer, the inventors measured the optical absorption of the PQD paper to be 91% and the corresponded quantum yield to be 63.9%, as illustrated in Table 1 in Figure 11. The quantum yield is not as high as pure PQDs because the CNCs absorb light in the UV region, thus suppressing the quantum yield.

[0050] Another desirable property of the PQD paper 510 is its flexibility. The inventors calculated the bending curvature of the paper 510 using the equation $Curvature = \sqrt{24(s-d)}/d^{3/2}$, in which *s* is the initial length of the PQD paper 510 and *d* is the horizontal distance between two edge points of the PQD paper at different bending conditions. Figure 12 illustrates various bending curvatures (from 0.128 to 0.283 mm^{-1}) of the PQD paper 510, which confirms its flexibility and

compatibility for working on different curved surfaces. Note that the value of s and the plural values of d are illustrated in the figure, and the bending curvature for each configuration is also illustrated in the figure.

[0051] The PQD paper 510 obtained based on the method illustrated in Figure 4 can be used as the green color converter for a white LED 1300, which is shown in Figure 13. The fabrication process of the PQD paper-based LED 1300 starts with making two 450-nm blue LED chips 1302 on a base 1301. For this embodiment, the two blue LED chips 1302 were packaged in a 3 mm × 3 mm LED base 1301. Base 1301 may be configured to have a rim 1303, as shown in the figure. Those skilled in the art will know that fewer or more LED chips may be used, and also that the dimension of the LED base 1301 may be increased or decreased accordingly. In one embodiment, it is possible to have one or more LEDs that emit ultraviolet light instead of blue light. If this is the case, then an additional blue light emitting layer is necessary to be placed over the UV LEDs to emit the blue light.

[0052] Next, KSF red phosphor was mixed with silicone resin to form a mixture 1304, and the mixture was dispensed onto the base 1301, over the LED chips 1302, within the rim 1303. The KSF red phosphor is configured to generate an emission spectrum consisting of several sharp peaks (FWHM < 5 nm) at ~630 nm (i.e., red light) with 98.8% high color purity. Moreover, previous studies have shown that green PQDs with red KSF phosphors possess a higher efficiency and wider color gamut than with other red QD phosphors. After curing the KSF red phosphor mixture 1304 (for example, for about 1 h), the PQD paper 510 was attached on top

of the package (on the rim 1303) as the green color converter, to achieve the white LED device 1300, which features a proven on-chip QD device design.

[0053] Due to the instability of the PQDs under high-energy blue light illumination, most existing PQD-based white LEDs only show a luminous efficiency of ~50 lm/W, which requires further improvement for practical use in room lighting (> 100 lm/W). However, the present device shows a better stability of the PQDs, as discussed later.

[0054] A specific method for making the device 1300 is now discussed. This method and the specific values discussed herein are not intended to limit the invention. Two 450-nm blue GaN LED chips (e.g., Epistar Corporation, Taiwan, chip size: 500 μm × 1000 μm) were mounted in a 3 mm × 3 mm package that consisted of a Ag-plated lead-frame and composite light reflector, followed by Au wire bonding to build the connection between the LED chips and the electrodes. Next, the KSF red phosphor was mixed with silicone resin and the mixture was dispensed into the LED package. After 1 h curing, the PQD paper was attached to the top of the rim of the package using silicone glue to complete the PQD paper-based LED device.

[0055] Figure 14 reveals the electroluminescence (EL) spectra of the PQD paper-based white LED 1300 at different drive currents (from 5 to 60 mA), demonstrating the presence of three primary peaks 1402, 1404, and 1406 located at 452 nm, 518 nm, and 630 nm, respectively, which correspond to the blue LED chips 1302, the green PQD paper 510, and the red KSF phosphor 1304, respectively. The FWHMs for the blue, green, and red emission peaks were determined to be 16 nm, 28 nm, and 5 nm, which enables strong white light emission with a correlated color

temperature of 6,706 K and color coordinate of (0.311, 0.320). The color gamut of the PQD paper-based LED 1300 has been found to cover a large color space of 123% of the NTSC standard and 92% of Rec. 2020, the most important color standard for next-generation 8K4K displays. The color coordinates of the blue LED and KSF red phosphor are very close to the blue and red points defined by Rec. 2020.

[0056] The current-dependent luminous efficiency 1502 and the luminous flux 1504 of the PQD paper-based LED 1300 are plotted in Figure 15 as a function of the applies the current. The maximum efficiency of the PQD paper-based LED 1300 is observed to be at 124 lm/W at 6 mA, which is the highest efficiency of the studied PQD LED 1300. Even when the drive current goes up to 50 mA, the PQD paper-based LED 1300 still exhibits a luminous efficiency of over 100 lm/W (see curve 1502 in Figure 15), indicating that the device 1300 can maintain its high performance over a wide range of drive currents. Furthermore, the PQD paper-based LED 1300 displays excellent stability. After a continuous operation of 240 h, the device 1300 shows just 12.4% degradation of the luminous flux (see Figure 16).

[0057] Figure 17A summarizes the luminous efficiency and color gamut performance of various converter-type QD LEDs reported in the literature (illustrated in the figure with letters A to G) and also the novel LED 1300, and the details of these devices A to G are listed in Table 2 in Figure 18. Among non-perovskite QD LEDs, liquid phase CdSe QDs (device G in Figure 17A) has shown the highest performance with a luminous efficiency of 64 lm/W. However, because green CdSe QDs feature a longer PL wavelength (~550 nm) than the ideal green wavelength

(~525 nm), LEDs based on CdSe QDs are not conducive to achieving a wide color gamut. Meanwhile, due to the poor thermal stability of PQDs, most PQD-based LEDs exhibit efficiencies below 70 lm/W. Embedding PQDs into hard porous templates or polymeric matrices has been proposed as an effective way to improve the stability of such devices. As an example, device E [11] in Figure 17A uses a polyvinylidene fluoride/PQD composite film-based white LED that can achieve a high efficiency of 109 lm/W and NTSC of 121%. In contrast to the existing devices A to G, the PQD paper 510 enables the LED 1300 to achieve an LED luminous efficiency of 124 lm/W with a color gamut that reaches 123% of the NTSC standard. In addition, the PQD paper based LED 1300 exhibits a long operation lifetime of 240 h, which is much longer than all other PQD-based white LEDs.

[0058] The enhanced performance of the PQD paper-based LED device 1300 is attributed to the QD structure within the cellulose paper. Due to the presence of abundant $-HSO_3^-$ and $-O^-$ capping ligands, the CNCs are electronegative and able to complex with cations in the PQDs ($CH_3NH_3^+$, Pb^{2+}), thus confining the QDs in the entangled nanocellulose structure. The complexation reaction responsible for this result achieves a “protective shell” to make the PQDs less sensitive to polar compounds, such as moisture and oxygen, thus improving their stability. In addition, the gaps between individual CNCs can increase the heat dissipation area, which also improves the thermal stability of the PQDs, leading to even better thermal resistance than state-of-the-art CdSe QDs. In this regard, Figure 19 shows the normalized intensity versus temperature for commercial CdSe QSs (see curve 1902) and the same normalized intensity 1904 for the LED 1300.

[0059] While it may not be desirable to operate the paper device 1300 at high temperatures due to cellulose distortion, the good thermal resistance of the PQD paper 510 is enough to dissipate the heat generated by high-flux emission, allowing the LED device 1300 to be stably operated at room temperature. When compared the operation lifetime of the PQD paper-based LED 1300 with other PQD LEDs in the literature, as shown in Figure 17B and Table 3 in Figure 20, it was found that the PQD paper-based LED device 1300 has a much longer operation lifetime (240 h) than the other LEDs, thus confirming the high-stability of the PQD paper-based LED and its potential for next-generation PQD lighting applications.

[0060] To improve the viewing angle of the PQD paper-based LED 1300, in one embodiment, a curved color converter structure is implemented for the LED device 2100 shown in Figure 21. Curved PQD paper-based LED device 2100 has a substrate 2102 on which the LED base 1301 is placed. The LED base 1301 includes the blue LED chip 1302 and the KSF mixture 1304. Instead of placing the PQD paper 510 in a flat manner as in the device 1300 shown in Figure 13, the device 2100 has a curved first PQD paper 510A and a curved second PQD paper 510B placed above the LED base 1301, perpendicular to the first curved PQD paper 510A. Note that the chamber 2110 defined by the LED base 1301 (at the bottom) and the two curved PQD papers 510A and 510B (at the top) is filled with air. Those skilled in the art will understand that the novel device 2100 may work with only one curved PQD paper 510 or with more than two such papers, depending on the need to fully enclose the chamber 2110.

[0061] The viewing angle for the device 2100 is defined by the angle range where the LED brightness is above half of the maximum brightness. For the embodiment shown in Figure 21, it was found that the viewing angle of the LED 2100 increased from 120° to 143° as the curvature of the PQD paper increased from 0 mm^{-1} (flat status) to 0.283 mm^{-1}, as illustrated in Figure 22. Note that Figure 22 plots on the Y axis the viewing angle in degrees and on the X axis the curvature of the PQD paper.

[0062] Figure 23A plots the angular distribution curve of the radiant intensity for a LED with a flat PQD paper structure while Figure 23B plots the same quantity for a curved PQD paper structure (0.283 mm^{-1} curvature). Compared to the flat device 1300, the radiant intensity of the LED 2100 with the curved PQD paper is more uniform at different angles, and the viewing angle is larger, which is beneficial. In this regard, for the design of a direct backlight system, using LEDs 2100 with larger viewing angles can increase the pitch between LEDs and decrease the optical distance, which means that with one or more of the embodiments discussed herein it is possible to reduce the usage of LEDs and fabricate thinner backlight displays for future mini-LED backlight applications.

[0063] Based on the above teachings, a method for making a perovskite quantum dot paper layer that emits green light is now discussed with regard to Figure 24. The method includes a step 2400 of providing cellulose nanocrystals, a step 2402 of providing perovskite-based quantum dots, a step 2404 of mixing the cellulose nanocrystals with the perovskite-based quantum dots, and a step 2406 of making the perovskite quantum dot paper. In one application, the method further

includes mixing the cellulose nanocrystals with an organic compound to obtain a first suspension, mixing the perovskite-based quantum dots with the organic compound to obtain a second suspension, and mixing the first suspension with the second suspension to obtain a mixture. The method may further include a step of filtering the mixture to insulate solid parts, and/or a step of drying the solid parts to obtain the perovskite quantum dot paper. In one application, the perovskite quantum dot paper includes one or more of $CH_3NH_3PbBr_3$, $CH_3NH_3PbCl_3$, and $CH_3NH_3PbI_3$ quantum dots and cellulose nanocrystals, or the perovskite quantum dot paper includes $CH_3NH_3PbBr_3$ quantum dots and cellulose nanocrystals.

[0064] In another embodiment, a method for making a white light emitting device 1300 is illustrated in Figure 25. The method includes a step 2500 of providing a base 1302, a step 2502 of attaching a blue light emitting chip 1304 to the base 1302, wherein the blue light emitting chip is configured to generate blue light, a step 2504 of placing a red light layer 1306 over the blue light emitting chip 1304, wherein the red light layer is configured to emit red light, and a step 2506 of placing a perovskite quantum dot paper layer 1306 over the red light layer 1306. The perovskite quantum dot paper layer 1306 is configured to emit green light.

[0065] In one application, the perovskite quantum dot paper layer includes $CH_3NH_3PbBr_3$ quantum dots and cellulose nanocrystals, and the red light layer includes $K_2SiF_6:Mn^{4+}$ phosphor for generating the red light. The method may further include a step of forming an empty chamber between the red light layer and the perovskite quantum dot paper layer, and/or a step of forming the perovskite quantum dot paper layer to be curved.

[0066] The disclosed embodiments provide a PQD paper-based LED device that generates white light with high efficiency and wide color gamut. The PQD paper shows a high optical absorption of 91%, as well as uniform emission with a FWHM of 28 nm and a peak wavelength of 518 nm. The novel white LED device, which includes green PQD paper, red KSF phosphor, and blue LED chips, exhibits a luminous efficiency of 124 lm/W, a wide color gamut of 123% of the NTSC standard, and a viewing angle of 120°. The device also shows superior stability when compared with the existing device, and can operate for 240 h with just 12.4% luminous degradation. In addition, the viewing angle of the LED device can be further improved to 143° by using the flexible PQD paper as a curved color converter, thus illustrating the multifunctionality of the PQD paper. It should be understood that this description is not intended to limit the invention. On the contrary, the embodiments are intended to cover alternatives, modifications and equivalents, which are included in the spirit and scope of the invention as defined by the appended claims. Further, in the detailed description of the embodiments, numerous specific details are set forth in order to provide a comprehensive understanding of the claimed invention. However, one skilled in the art would understand that various embodiments may be practiced without such specific details.

[0067] Although the features and elements of the present embodiments are described in the embodiments in particular combinations, each feature or element can be used alone without the other features and elements of the embodiments or in various combinations with or without other features and elements disclosed herein.

[0068] This written description uses examples of the subject matter disclosed to enable any person skilled in the art to practice the same, including making and using any devices or systems and performing any incorporated methods. The patentable scope of the subject matter is defined by the claims, and may include other examples that occur to those skilled in the art. Such other examples are intended to be within the scope of the claims.

References

[1] Nedelcu, G. *et al.* Fast anion-exchange in highly luminescent nanocrystals of cesium lead halide perovskites ($CsPbX_3$, X = Cl, Br, I). *Nano Lett.* **15**, 5635–5640 (2015).

[2] Sun, C. *et al.* Efficient and stable white LEDs with silica-coated inorganic perovskite quantum dots. *Adv. Mater.* **28**, 10088–10094 (2016).

[3] Leng, M. Y. *et al.* All-inorganic bismuth-based perovskite quantum dots with bright blue photoluminescence and excellent stability. *Adv. Funct. Mater.* **28**, 1704446 (2018).

[4] Pan, J. *et al.* Highly efficient perovskite-quantum-dot light-emitting diodes by surface engineering. *Adv. Mater.* **28**, 8718–8725 (2016).

[5] Zhao, X. F., Ng, J. D. A., Friend, R. H. & Tan, Z. K. Opportunities and challenges in perovskite light-emitting devices. *ACS Photonics* **5**, 3866–3875 (2018).

[6] Wang, H. C. *et al.* Mesoporous silica particles integrated with all-inorganic $CsPbBr_3$ perovskite quantum-dot nanocomposites (MP-PQDs) with high stability and wide color gamut used for backlight display. *Angew. Chem.* **55**, 7924–7929 (2016).

[7] Lin, C.-H. *et al.* Hybrid-type white LEDs based on inorganic halide perovskite QDs: candidates for wide color gamut display backlights. *Photonics Res.* **7**, 579–585 (2019).

[8] He, J. *et al.* Hybrid downconverters with green perovskite-polymer composite films for wide color gamut displays. *Opt. express* **25**, 12915–12925 (2017).

[9] Kim, H. J., Shin, M. H., Lee, J. Y., Kim, J. H. & Kim, Y. J. Realization of 95% of the Rec. 2020 color gamut in a highly efficient LCD using a patterned quantum dot film. *Opt. Express* **25**, 10724–10734 (2017).

[10] Yang, G. L. & Zhong, H. Z. Organometal halide perovskite quantum dots: synthesis, optical properties, and display applications. *Chin. Chem. Lett.* **27**, 1124–1130 (2016).

[11] Zhou, Q. C. *et al.* In situ fabrication of halide perovskite nanocrystal-embedded polymer composite films with enhanced photoluminescence for display backlights. *Adv. Mater.* **28**, 9163–9168 (2016).

WHAT IS CLAIMED IS:

1. A light emitting device (1300) configured to emit white light, wherein the device comprises:

a base (1302);

a blue light emitting chip (1304) attached to the base (1302) and configured to generate blue light;

a red light layer (1306) located over the blue light emitting chip (1304) and configured to emit red light; and

a perovskite quantum dot paper layer (1306) located over the red light layer,

wherein the perovskite quantum dot paper layer (1306) is configured to emit green light.

2. The device of Claim 1, wherein the perovskite quantum dot paper layer (1306) includes one or more of $CH_3NH_3PbBr_3$, $CH_3NH_3PbCl_3$, and $CH_3NH_3PbI_3$ quantum dots and cellulose nanocrystals.

3. The device of Claim 1, wherein the perovskite quantum dot paper layer (1306) includes $CH_3NH_3PbBr_3$ quantum dots and cellulose nanocrystals.

4. The device of Claim 2, wherein the red light layer includes $K_2SiF_6:Mn^{4+}$ phosphor for generating the red light.

5. The device of Claim 1, wherein the perovskite quantum dot paper layer (1306) is flat.

6. The device of Claim 1, wherein the perovskite quantum dot paper layer (1306) is curved with a given curvature radius.

7. The device of Claim 6, wherein the perovskite quantum dot paper layer defines an empty chamber with the red light layer.

8. The device of Claim 1, wherein the perovskite quantum dot paper layer (1306) includes plural and distinct perovskite quantum dot paper layers.

9. The device of Claim 1, wherein the blue light from the blue light emitting chip, the red light from the red light layer, and the green light from the perovskite quantum dot paper layer combine to form the white light.

10. A method for making a perovskite quantum dot paper layer that emits green light, the method comprising:

providing (2400) cellulose nanocrystals;

providing (2402) perovskite-based quantum dots;

mixing (2404) the cellulose nanocrystals with the perovskite-based quantum dots; and

making (2406) the perovskite quantum dot paper.

11. The method of Claim 10, further comprising:

mixing the cellulose nanocrystals with an organic compound to obtain a first suspension;

mixing the perovskite-based quantum dots with the organic compound to obtain a second suspension; and

mixing the first suspension with the second suspension to obtain a mixture.

12. The method of Claim 11, further comprising:

filtering the mixture to insulate solid parts.

13. The method of Claim 12, further comprising:

drying the solid parts to obtain the perovskite quantum dot paper.

14. The method of Claim 10, wherein the perovskite quantum dot paper includes one or more of $CH_3NH_3PbBr_3$, $CH_3NH_3PbCl_3$, and $CH_3NH_3PbI_3$ quantum dots and cellulose nanocrystals.

15. The method of Claim 10, wherein the perovskite quantum dot paper includes $CH_3NH_3PbBr_3$ quantum dots and cellulose nanocrystals.

16. A method for making a white light emitting device (1300), wherein the method comprises:

providing (2500) a base (1302);

attaching (2502) a blue light emitting chip (1304) to the base (1302), wherein the blue light emitting chip is configured to generate blue light;

placing (2504) a red light layer (1306) over the blue light emitting chip (1304), wherein the red light layer is configured to emit red light; and

placing (2506) a perovskite quantum dot paper layer (1306) over the red light layer (1306),

wherein the perovskite quantum dot paper layer (1306) is configured to emit green light.

17. The method of Claim 16, wherein the perovskite quantum dot paper layer includes $CH_3NH_3PbBr_3$ quantum dots and cellulose nanocrystals.

18. The method of Claim 17, wherein the red light layer includes $K_2SiF_6:Mn^{4+}$ phosphor for generating the red light.

19. The method of Claim 16, further comprising:

forming an empty chamber between the red light layer and the perovskite quantum dot paper layer.

20. The method of Claim 16, further comprising:

forming the perovskite quantum dot paper layer to be curved.

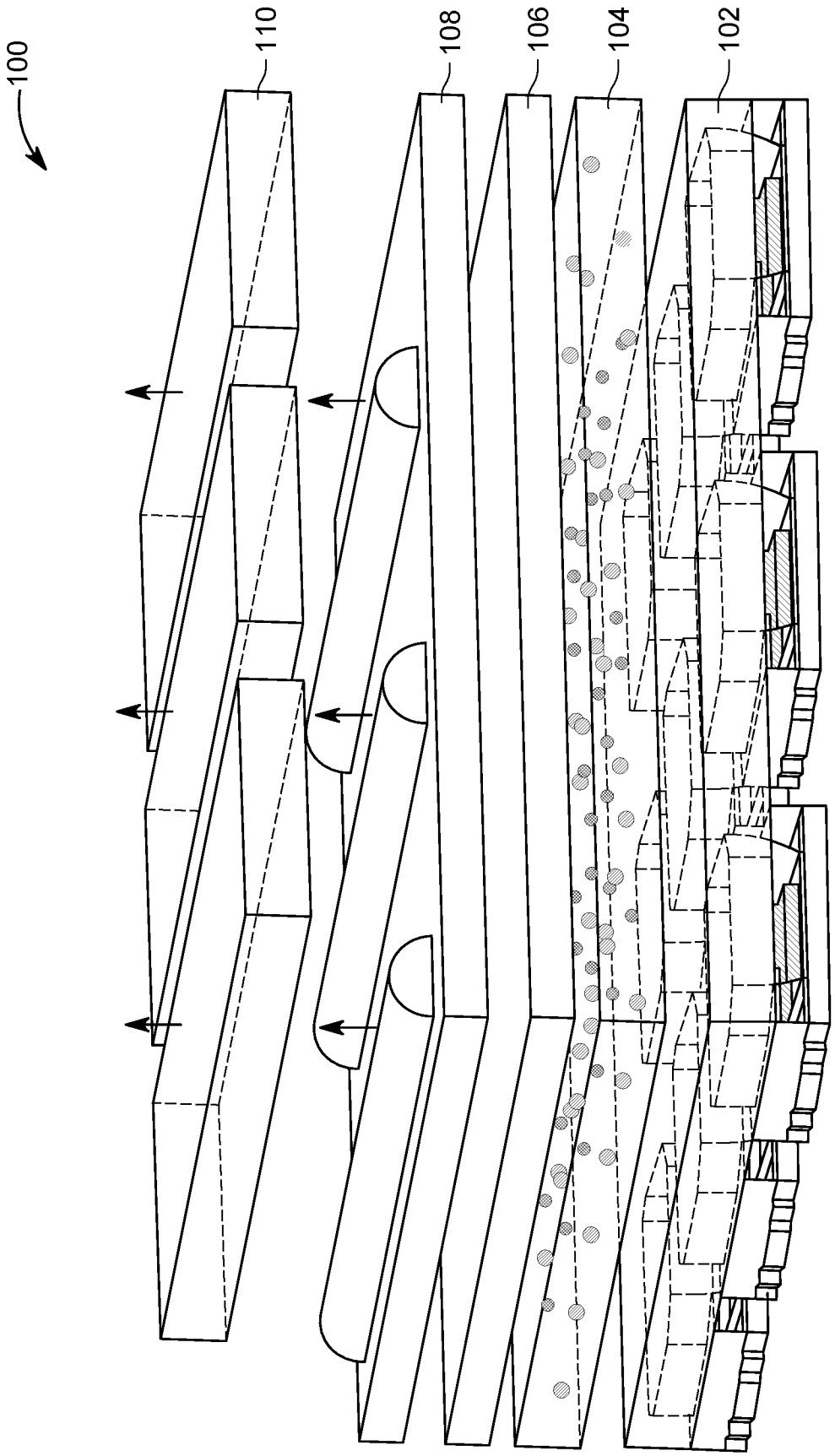

FIG. 1

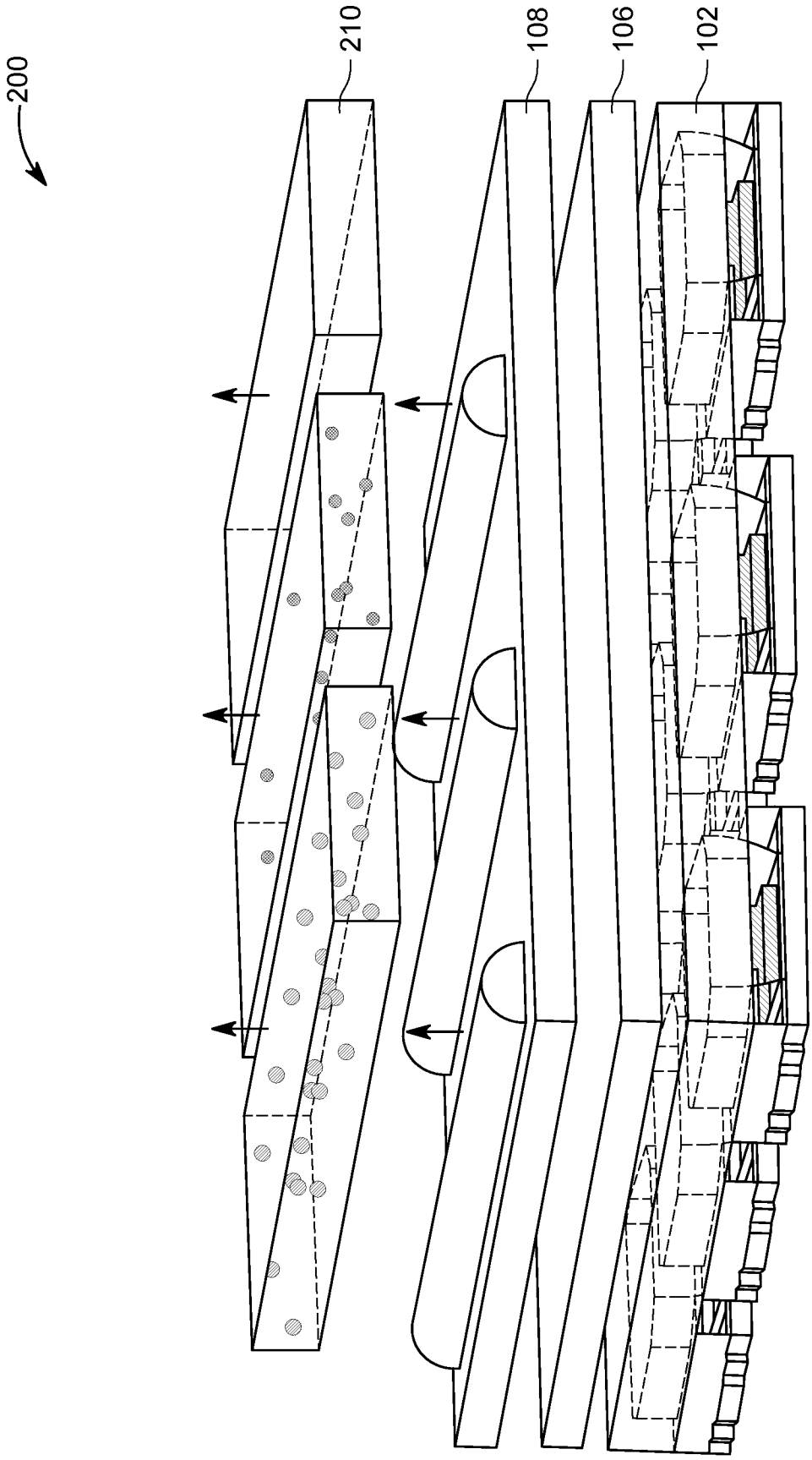

FIG. 2

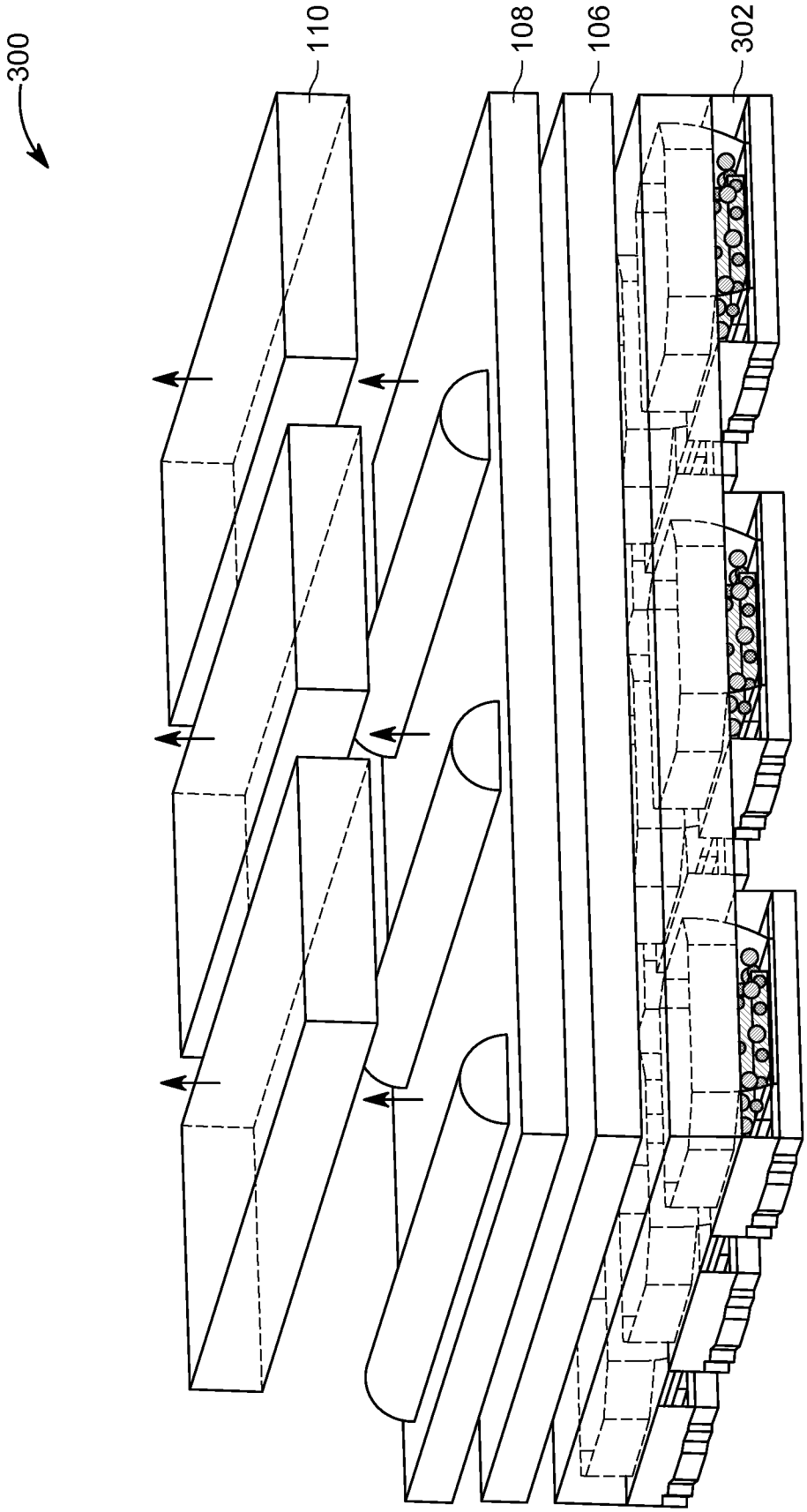

FIG. 3

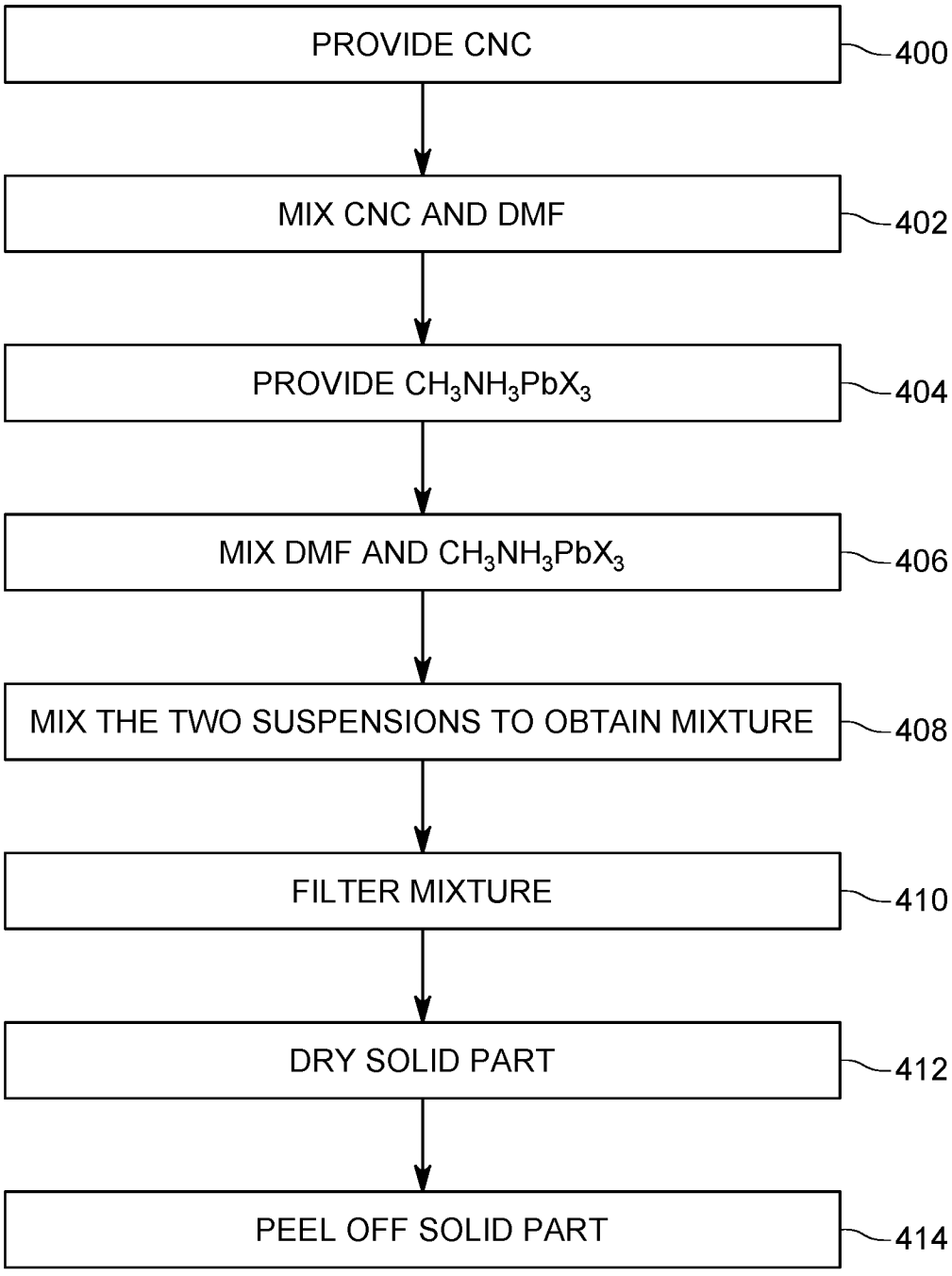
PROVIDE CNC
400
MIX CNC AND DMF
402
PROVIDE $CH_3NH_3PbX_3$
404
MIX DMF AND $CH_3NH_3PbX_3$
406
MIX THE TWO SUSPENSIONS TO OBTAIN MIXTURE
408
FILTER MIXTURE
410
DRY SOLID PART
412
PEEL OFF SOLID PART
414

FIG. 4

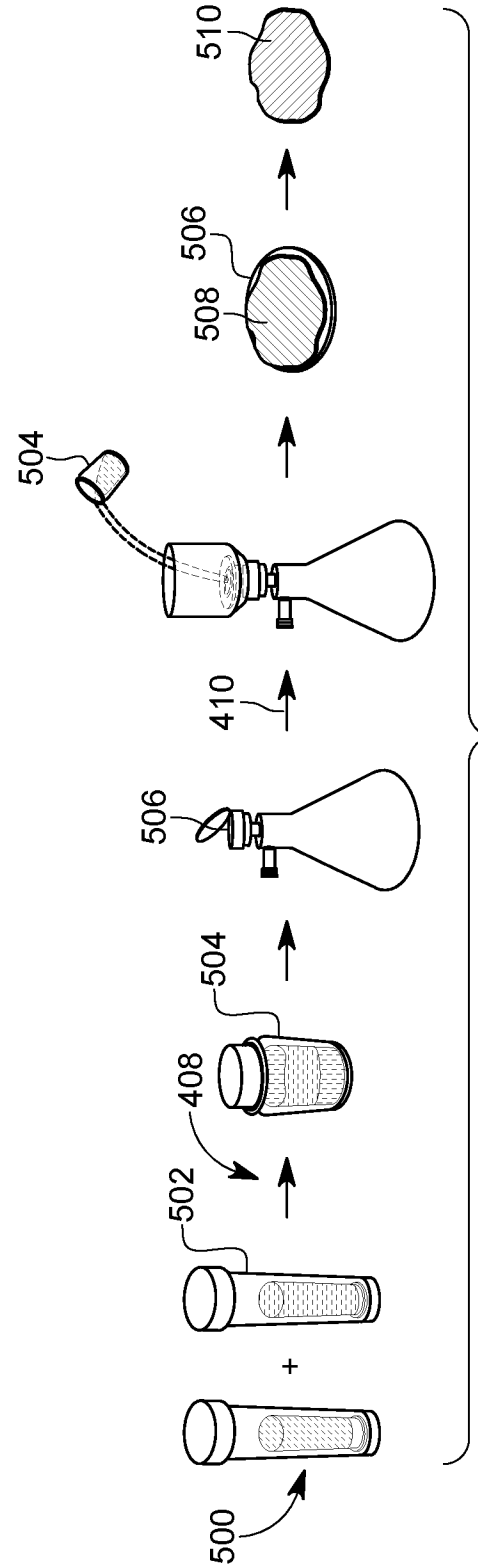

FIG. 5

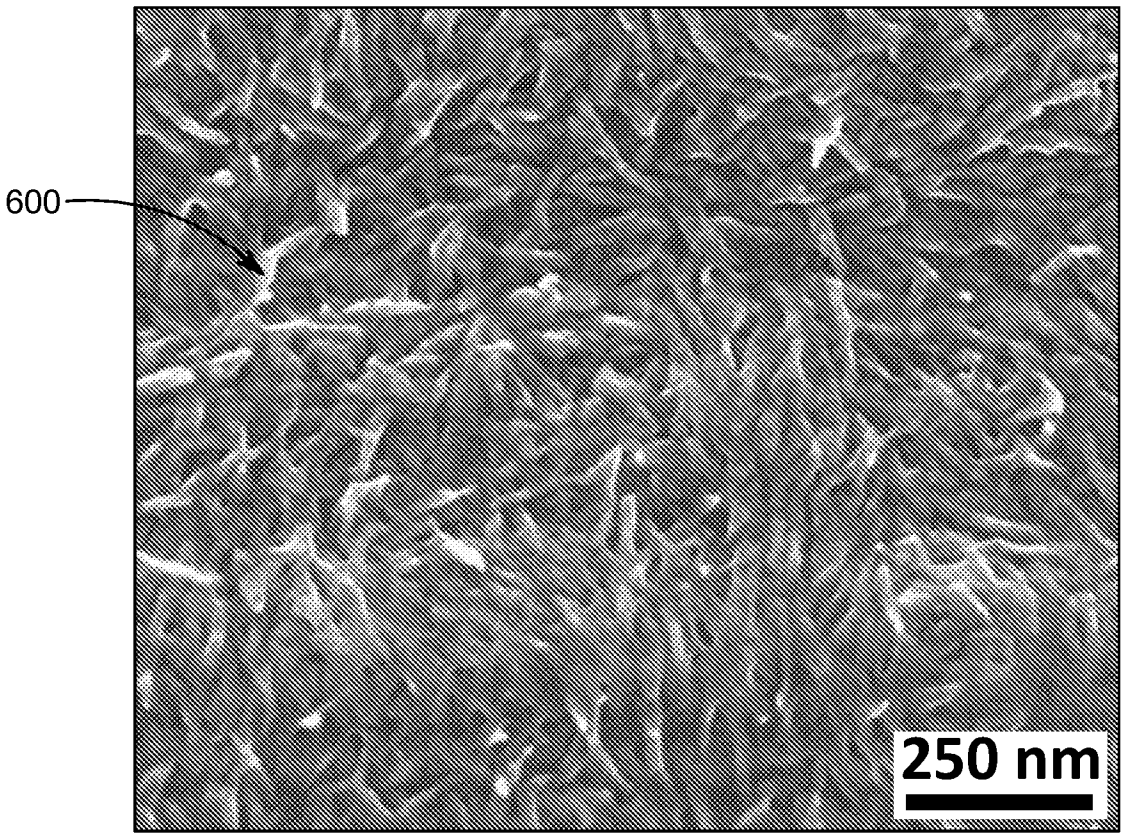

FIG. 6

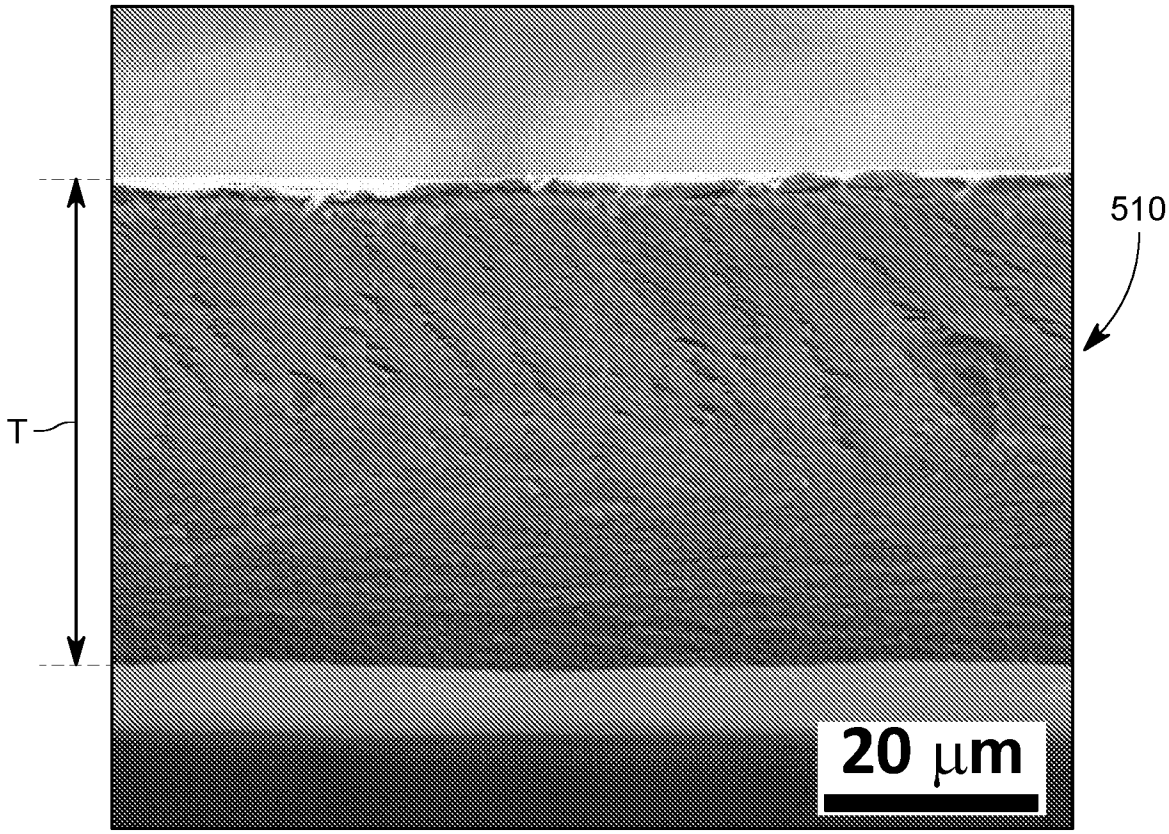

FIG. 7

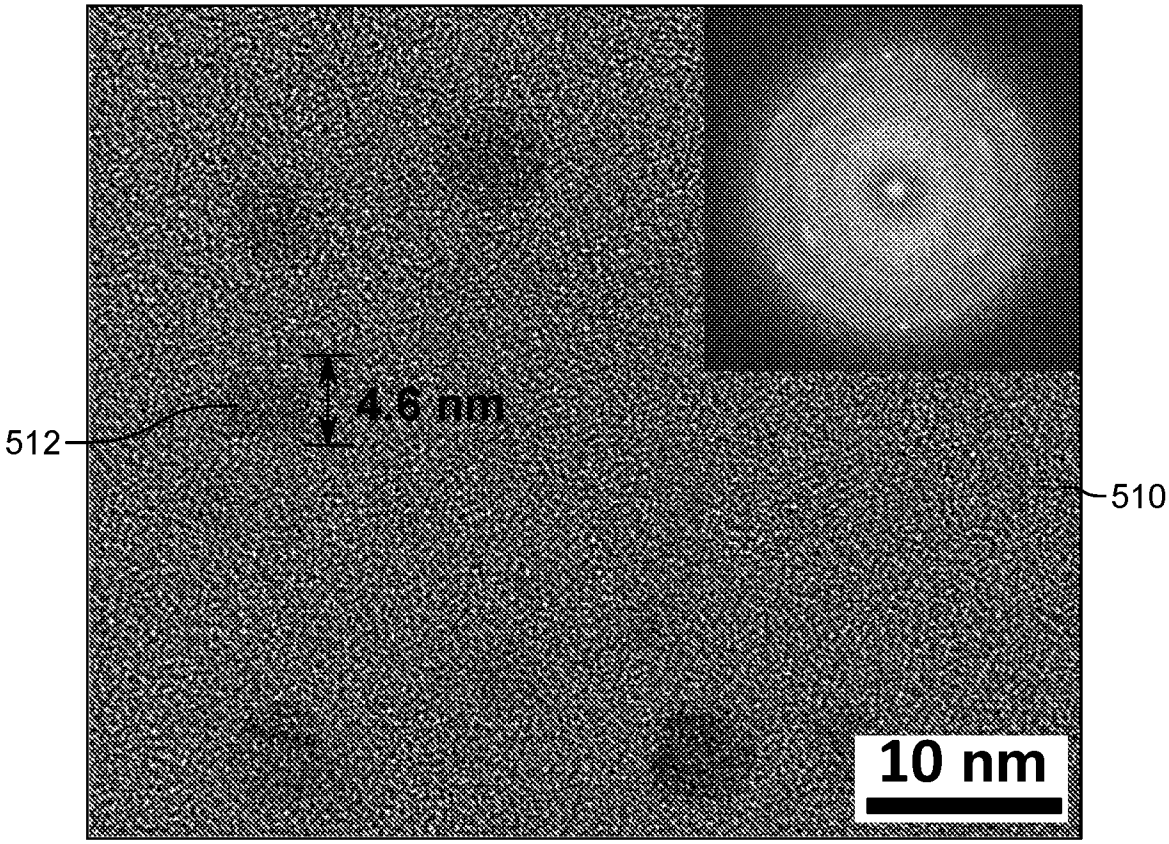

FIG. 8

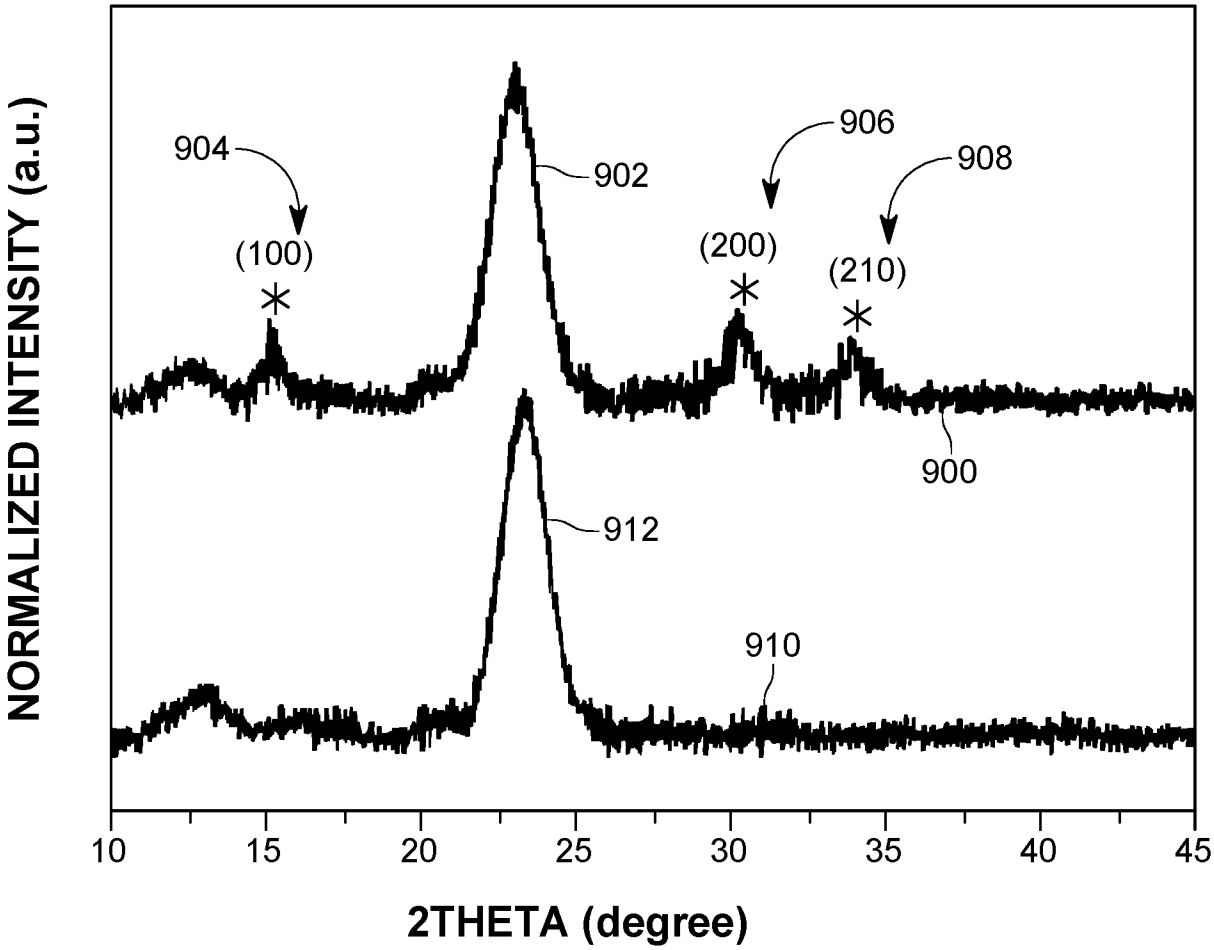
NORMALIZED INTENSITY (a.u.)
904
(100)
902
906
(200)
908
(210)
900
912
910
10
15
20
25
30
35
40
45
2THETA (degree)

FIG. 9

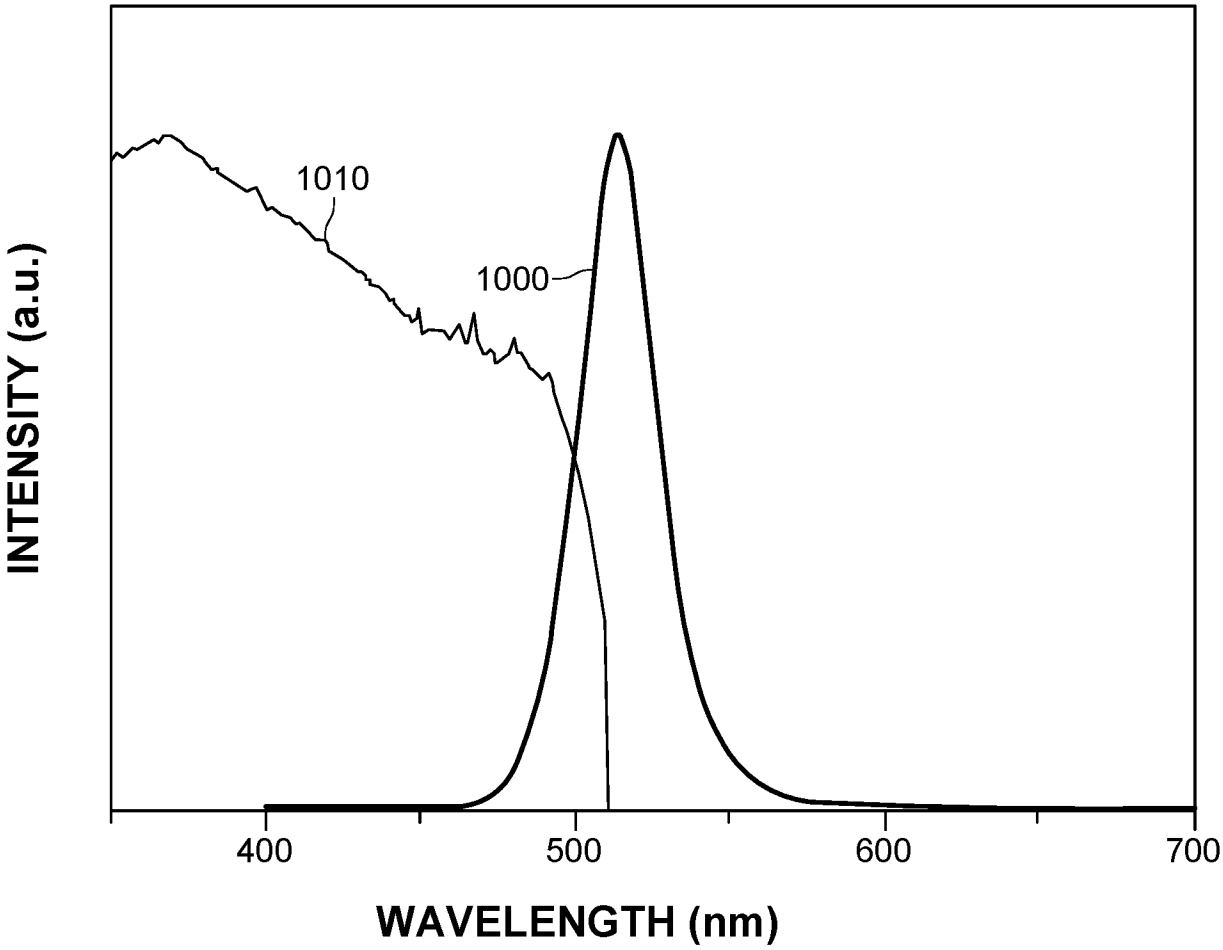

FIG. 10

TABLE 1

Absorption	91.1%
Transmission	8.9%
Absorbance	1.05
Quantum yield	63.9%
Color	x = 0.1379 y = 0.7429

FIG. 11

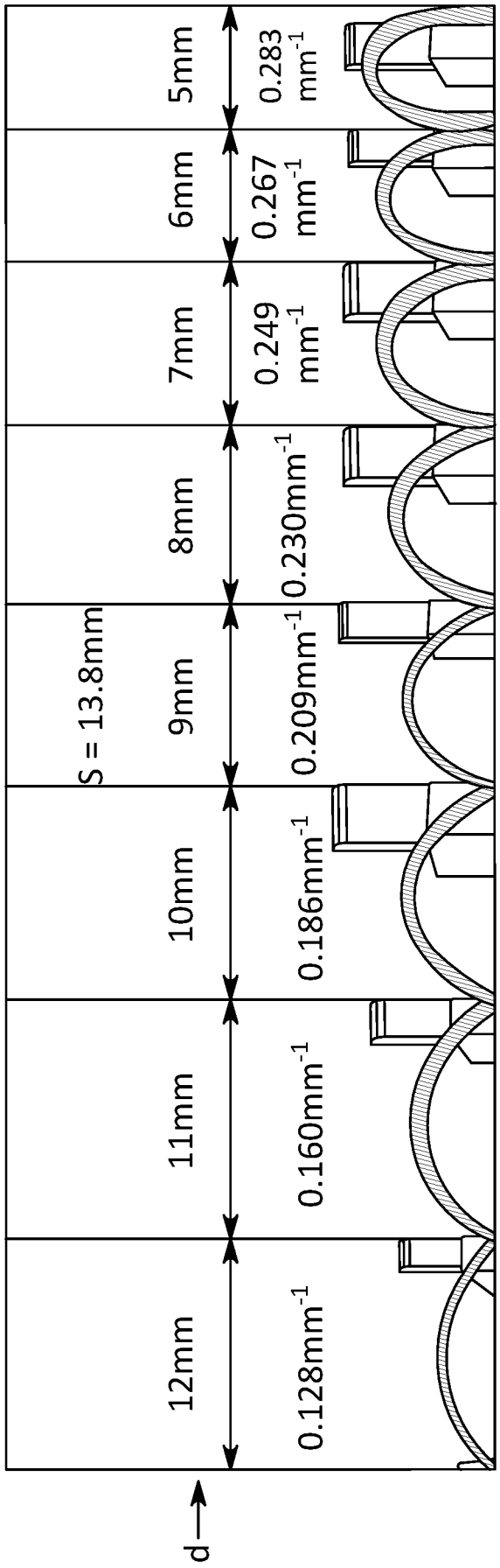
5mm
0.283 mm-1
6mm
0.267 mm-1
7mm
0.249 mm-1
8mm
0.230mm-1
S = 13.8mm
9mm
0.209mm-1
10mm
0.186mm-1
11mm
0.160mm-1
12mm
0.128mm-1
d

FIG. 12

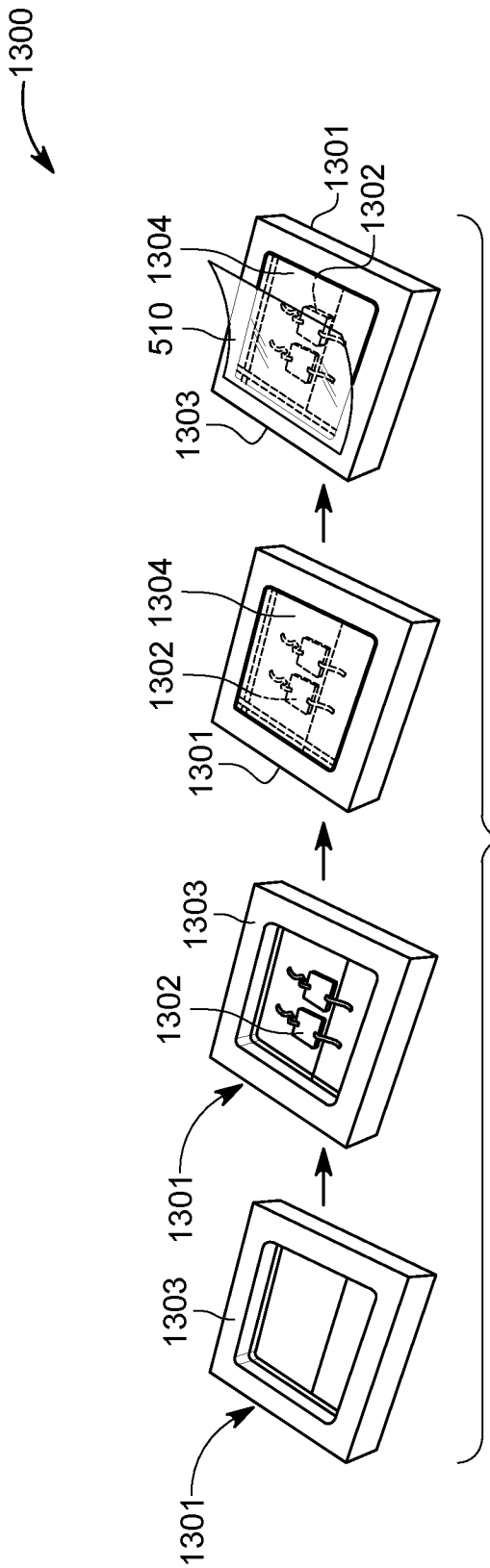
1300
1301
1302
1304
510
1303
1304
1302
1301
1303
1302
1301
1303
1301

FIG. 13

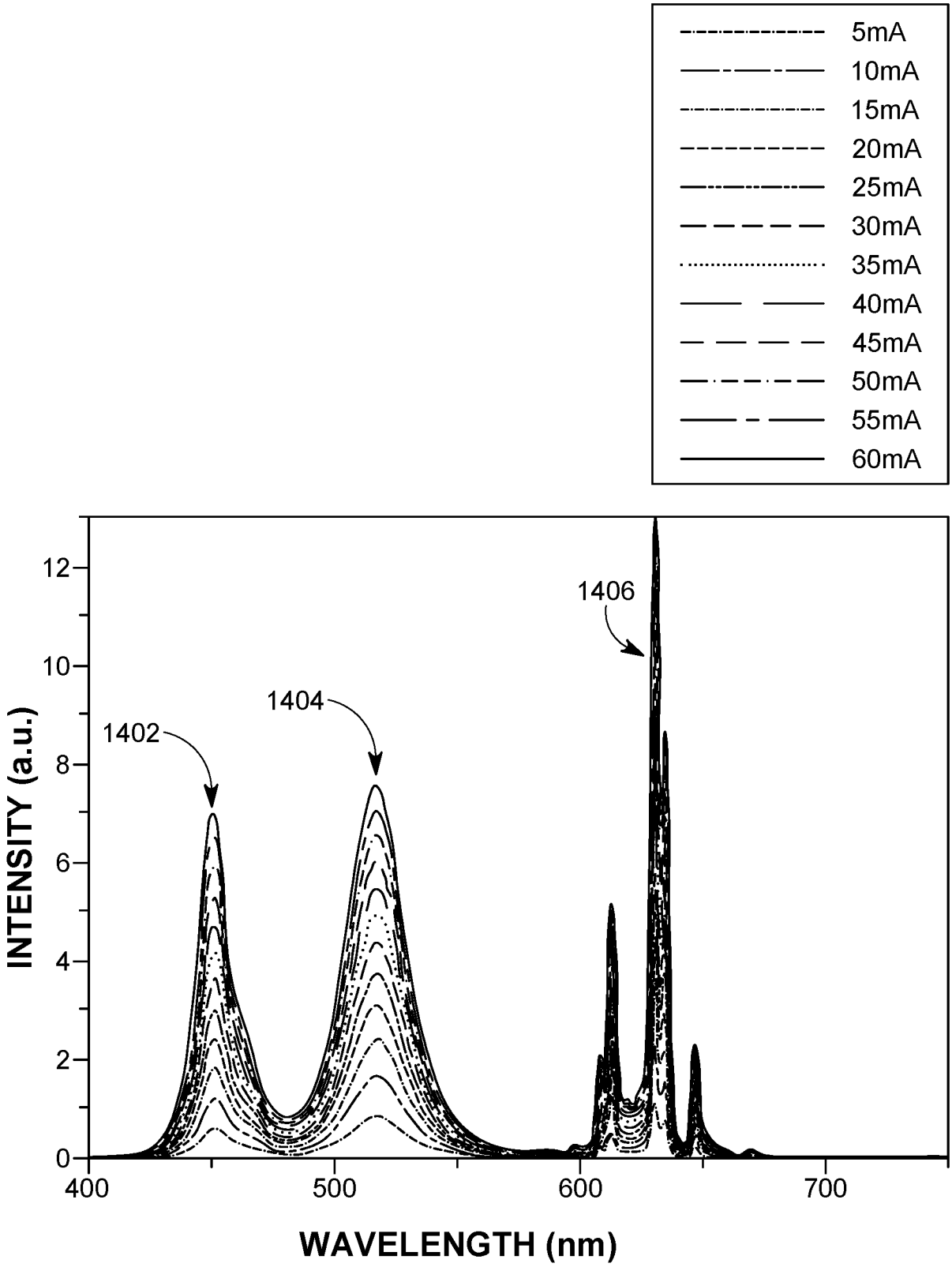
5mA
10mA
15mA
20mA
25mA
30mA
35mA
40mA
45mA
50mA
55mA
60mA
1402
1404
1406
INTENSITY (a.u.)
WAVELENGTH (nm)
0
2
4
6
8
10
12
400
500
600
700

FIG. 14

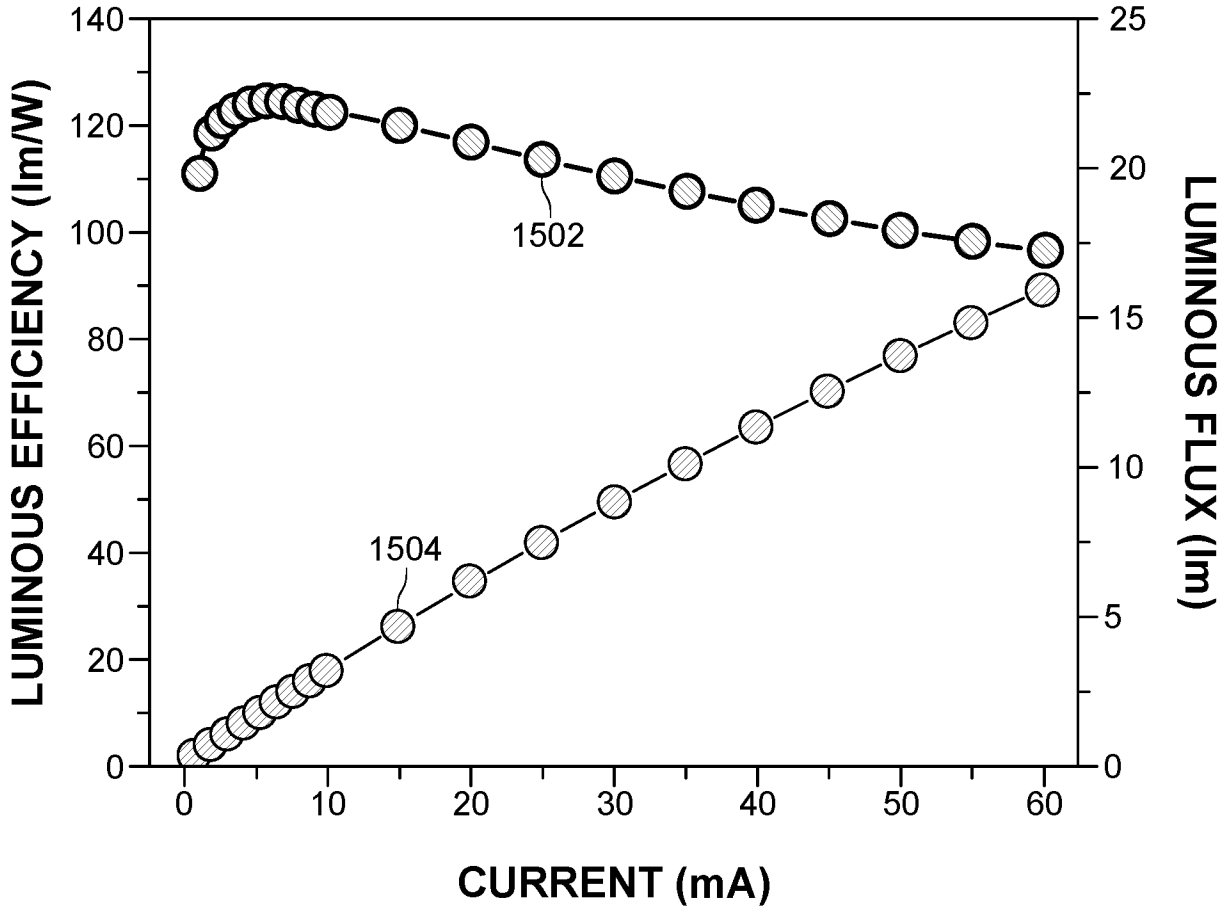
LUMINOUS EFFICIENCY (lm/W)
LUMINOUS FLUX (lm)
CURRENT (mA)
1502
1504
0
20
40
60
80
100
120
140
0
5
10
15
20
25
0
10
20
30
40
50
60

FIG. 15

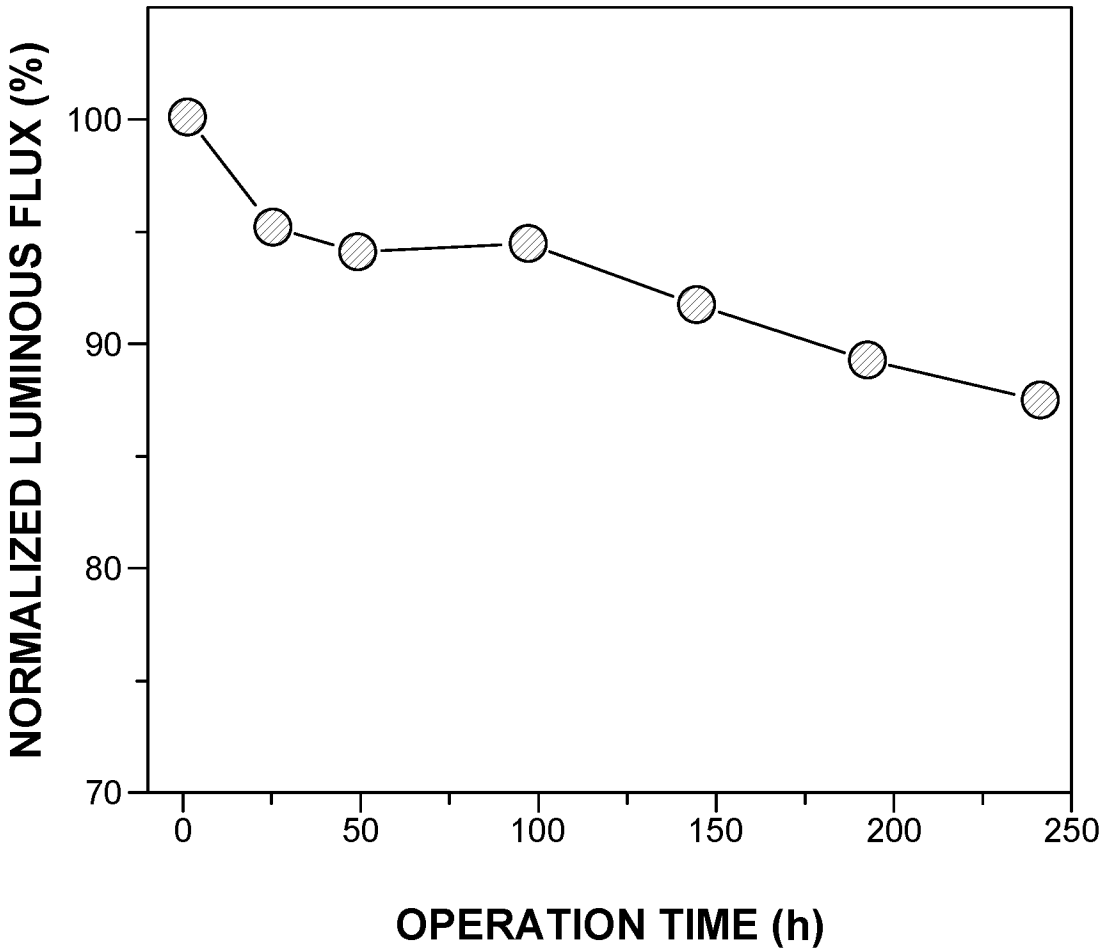
NORMALIZED LUMINOUS FLUX (%)
100
90
80
70
0
50
100
150
200
250
OPERATION TIME (h)

FIG. 16

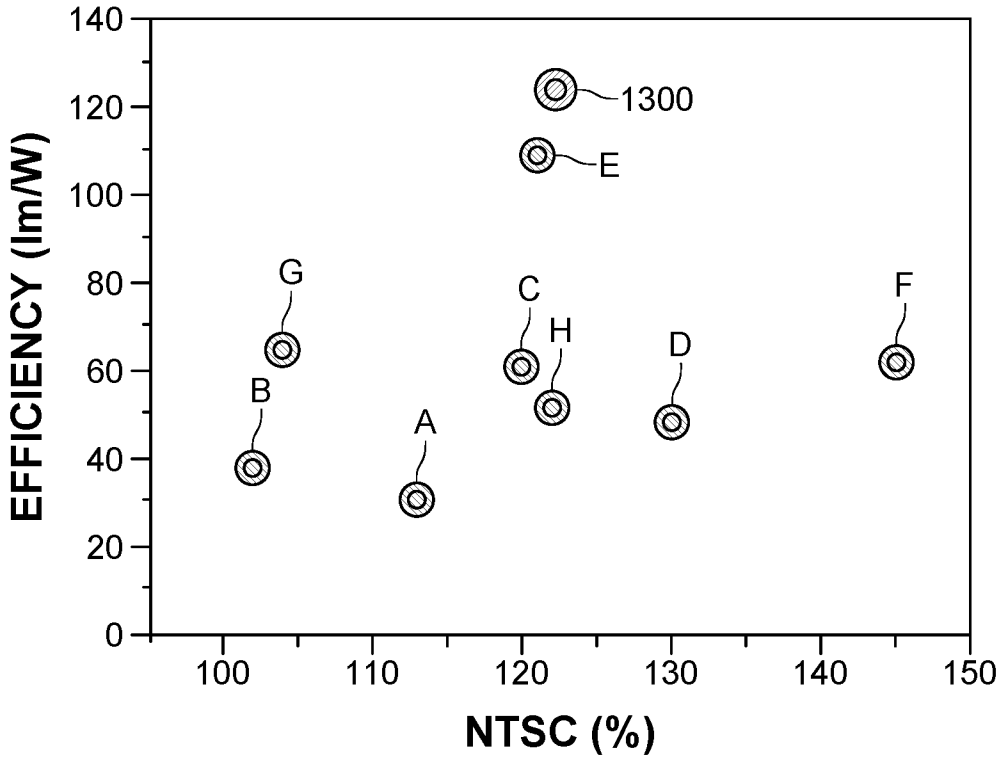

FIG. 17A

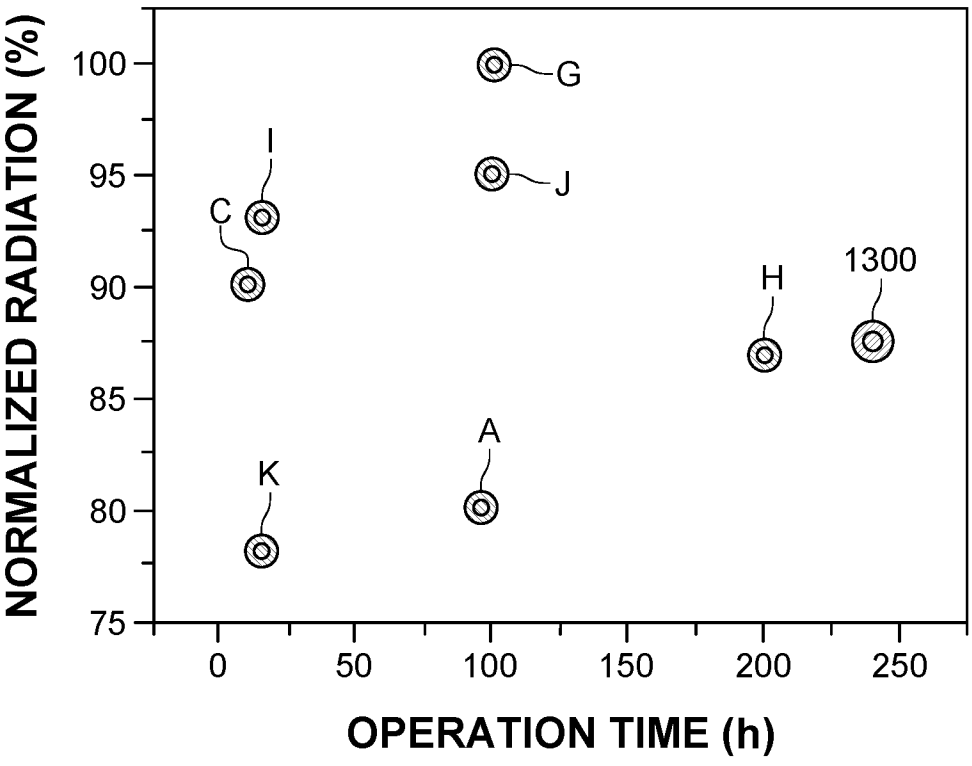

FIG. 17B

TABLE 2

Ref	Year	Material	Quantum dot type in package	Efficiency (lm/W)	NTSC (%)
A	2016	519 nm green mesoporous PQD, 625 nm red PQD	Mixed in silicone resin	30	113
B	2016	523 nm mesoporous $CsPbBr_3$/SDDA in PMMA, 630 nm KSF	Powders type	37	102
C	2016	522nm & 624 nm perovskite, QD/silica composites	Powders type	61	120
D	2015	515 nm colloidal $CH_3NH_3PbBr_3$ QDs, 630 nm KSF	PQD in PMMA, KSF in silicone,	48	130
E	2016	525 nm $MAPbX_3$/PVDF composite films, 630 nm KSF	PQD in PVDF, KSF in silicone,	109	121
F	2016	495 nm $CsPb(Br_{0.75}Cl_{0.25})_3$, 515 nm $CsPbBr_3$, 540 nm $CsPb(Br_{0.65}I_{0.63})_3$, 578 nm $CsPb(Br_{0.5}I_{0.5})_3$, 635 nm $CsPb(Br_{0.35}I_{0.65})_3$	Film type	62	145
G	2018	625 nm red CdSe/CdS/ZnS QD, 555 nm green CdSe/ZnS/CdSZnS QD	Liquid type	64	104
H	2019	519 nm green PQD, 625 nm red PQD	Liquid + solid type (hybrid)	51	122

FIG. 18

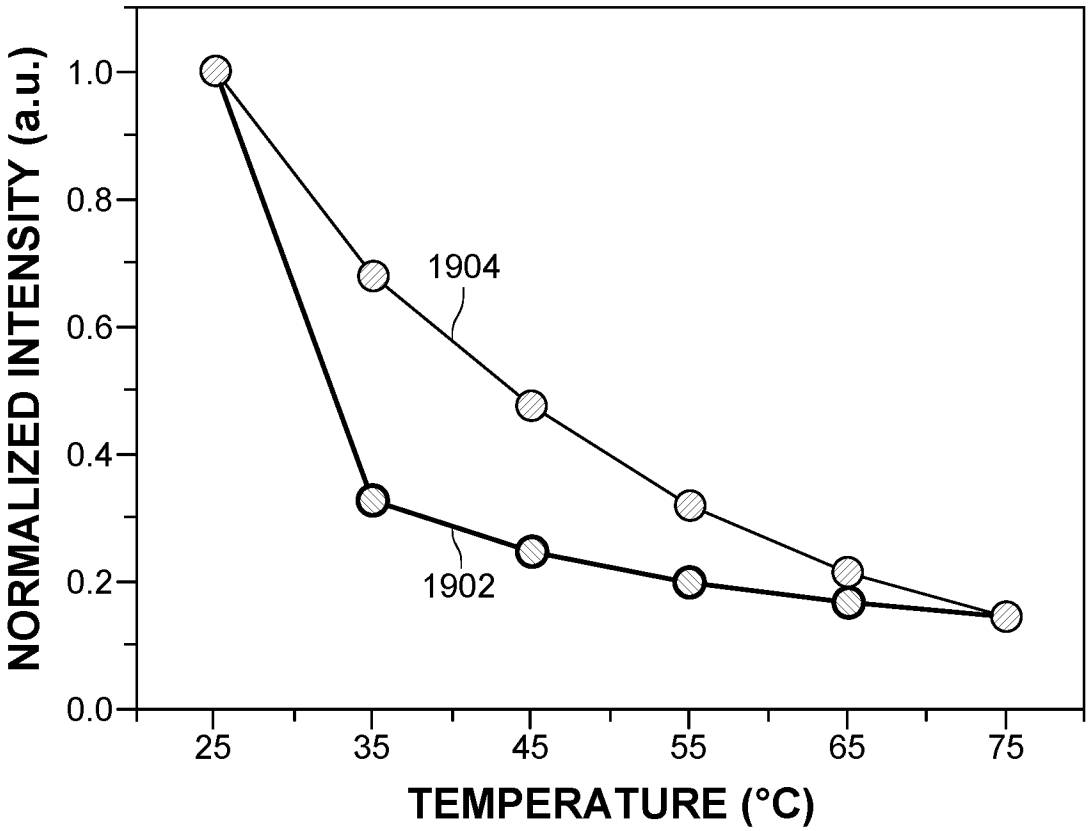
NORMALIZED INTENSITY (a.u.)
1.0
0.8
0.6
0.4
0.2
0.0
1904
1902
25
35
45
55
65
75
TEMPERATURE (°C)

FIG. 19

TABLE 3

Ref	Year	Material	Quantum dot type in package	Operation time (h)	Radiation (%)
A	2016	519 nm green mesoporous PQD, 625 nm red PQD	Mixed in silicone resin	96	80
K	2018	407 nm $Cs_3Bi_2Br_9$ QDs/silica composites, 551 nm $Y_3Al_5O_{12}$ Phosphor	Powders type	16	78
C	2016	522nm & 624 nm perovskite QD/silica composites	Powders type	10	90
I	2015	525 nm TDPA coated $CsPbBr_3$ QD, 630 nm KSF	Mixed in silicone resin	16	93
J	2016	630 nm $CsPbBr_{1.2}I_{1.8}$ QD, 540 nm $Y_3Al_5O_{12}:Ce^{3+}$ phosphor	Liquid type	100	95
G	2018	625 nm red CdSe/CdS/ZnS, 555 nm green CdSe/ZnS/CdSZnS QD	Liquid type	100	100
H	2019	519 nm green PQD, 625 nm red PQD	Liquid + solid type (hybrid)	200	88

FIG. 20

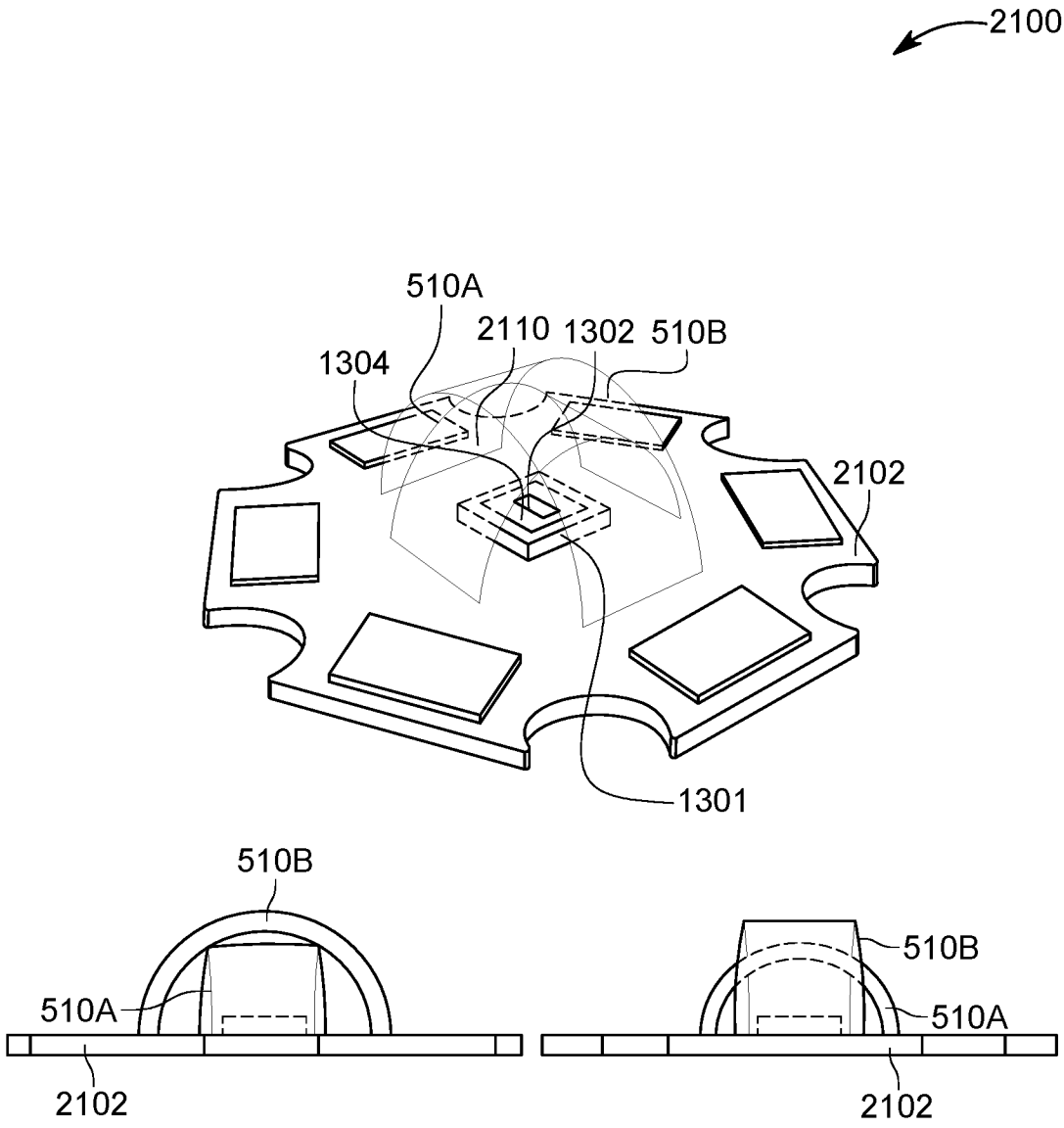
2100
510A
2110
1302
510B
1304
2102
1301
510B
510A
2102
510B
510A
2102

FIG. 21

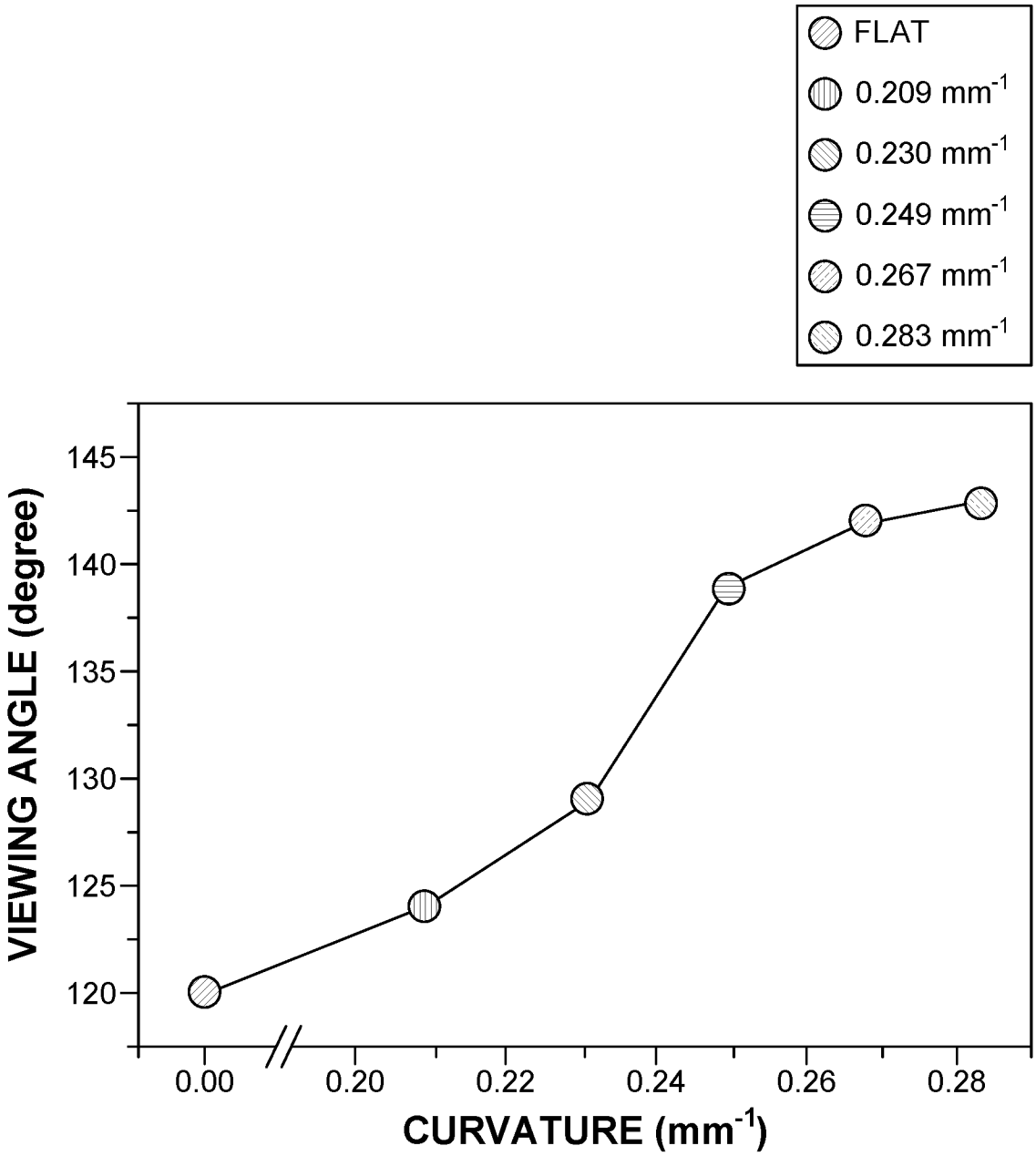
FLAT
0.209 mm-1
0.230 mm-1
0.249 mm-1
0.267 mm-1
0.283 mm-1
VIEWING ANGLE (degree)
145
140
135
130
125
120
0.00
0.20
0.22
0.24
0.26
0.28
CURVATURE (mm-1)

FIG. 22

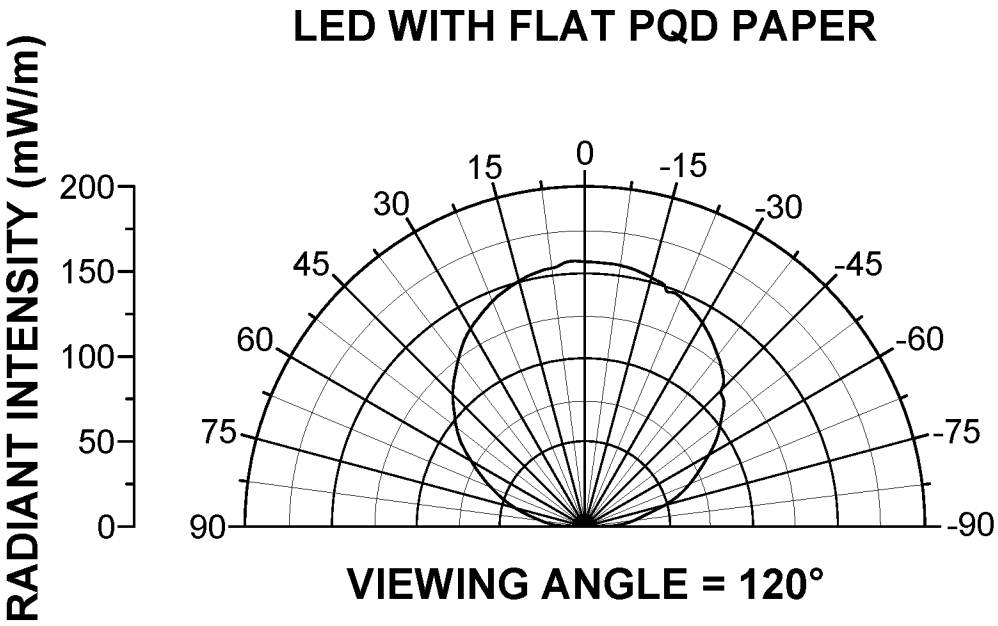

FIG. 23A

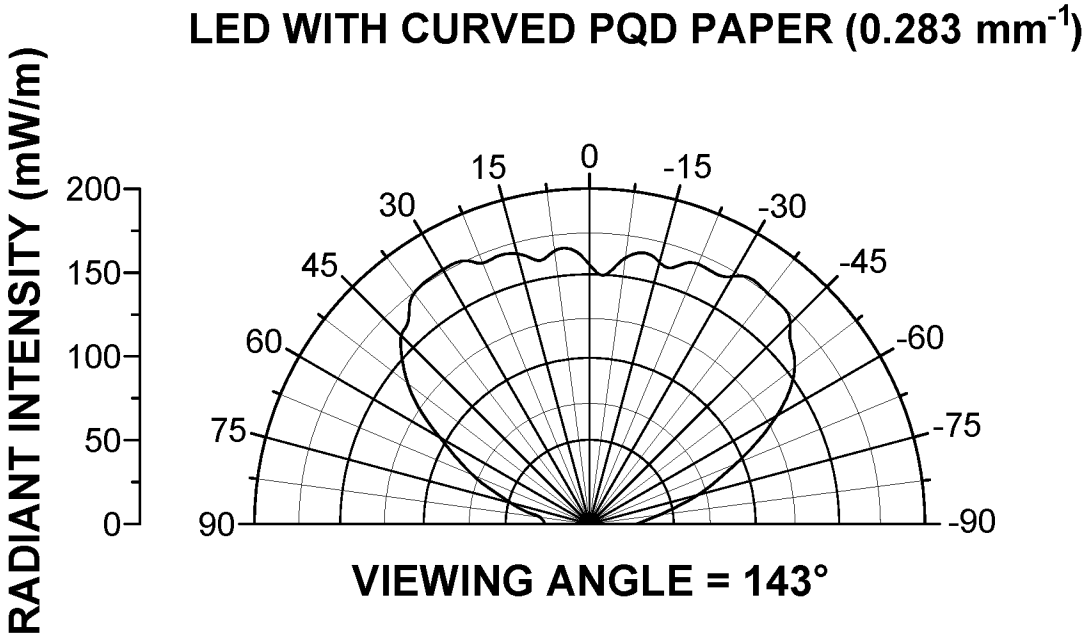

FIG. 23B

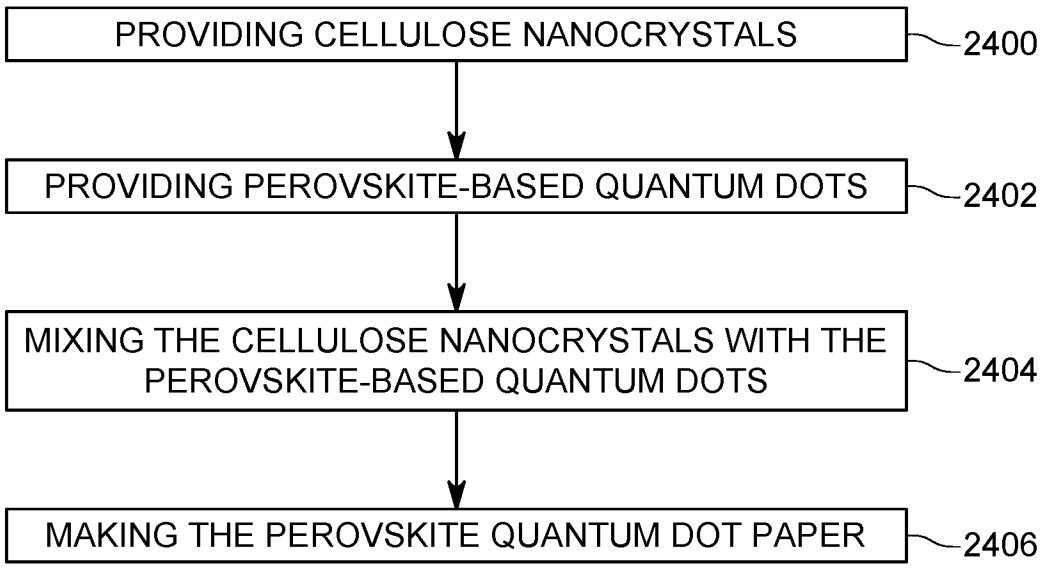
PROVIDING CELLULOSE NANOCRYSTALS
2400
PROVIDING PEROVSKITE-BASED QUANTUM DOTS
2402
MIXING THE CELLULOSE NANOCRYSTALS WITH THE PEROVSKITE-BASED QUANTUM DOTS
2404
MAKING THE PEROVSKITE QUANTUM DOT PAPER
2406

FIG. 24

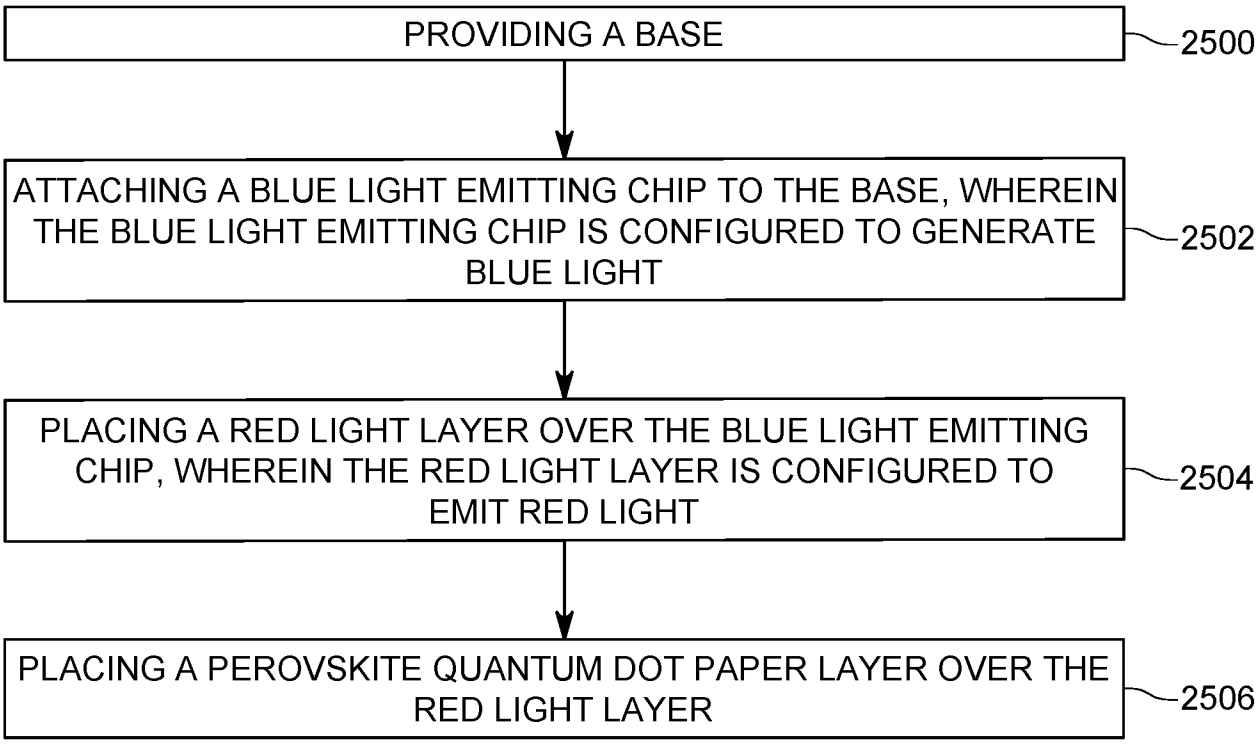
PROVIDING A BASE
2500
ATTACHING A BLUE LIGHT EMITTING CHIP TO THE BASE, WHEREIN THE BLUE LIGHT EMITTING CHIP IS CONFIGURED TO GENERATE BLUE LIGHT
2502
PLACING A RED LIGHT LAYER OVER THE BLUE LIGHT EMITTING CHIP, WHEREIN THE RED LIGHT LAYER IS CONFIGURED TO EMIT RED LIGHT
2504
PLACING A PEROVSKITE QUANTUM DOT PAPER LAYER OVER THE RED LIGHT LAYER
2506

FIG. 25

INTERNATIONAL SEARCH REPORT

International application No
PCT/IB2020/055988

A. CLASSIFICATION OF SUBJECT MATTER
INV. H01L27/32
ADD.

According to International Patent Classification (IPC) or to both national classification and IPC

B. FIELDS SEARCHED

Minimum documentation searched (classification system followed by classification symbols)
H01L

Documentation searched other than minimum documentation to the extent that such documents are included in the fields searched

Electronic data base consulted during the international search (name of data base and, where practicable, search terms used)
EPO-Internal

C. DOCUMENTS CONSIDERED TO BE RELEVANT

Category*	Citation of document, with indication, where appropriate, of the relevant passages	Relevant to claim No.
X	YOUNG HYUN SONG ET AL: "Long-term stable stacked CsPbBr 3 quantum dot films for highly efficient white light generation in LEDs", NANOSCALE, vol. 8, no. 47, 1 January 2016 (2016-01-01), pages 19523-19526, XP055726363, United Kingdom ISSN: 2040-3364, DOI: 10.1039/C6NR07410C	1,9,16
Y	page 19521 - page 19525; figures 1, 4	2-6,8, 10-15, 17,18
A		7,19,20
	----- -/--	

[X] Further documents are listed in the continuation of Box C.

[X] See patent family annex.

* Special categories of cited documents :

"A" document defining the general state of the art which is not considered to be of particular relevance

"E" earlier application or patent but published on or after the international filing date

"L" document which may throw doubts on priority claim(s) or which is cited to establish the publication date of another citation or other special reason (as specified)

"O" document referring to an oral disclosure, use, exhibition or other means

"P" document published prior to the international filing date but later than the priority date claimed

"T" later document published after the international filing date or priority date and not in conflict with the application but cited to understand the principle or theory underlying the invention

"X" document of particular relevance; the claimed invention cannot be considered novel or cannot be considered to involve an inventive step when the document is taken alone

"Y" document of particular relevance; the claimed invention cannot be considered to involve an inventive step when the document is combined with one or more other such documents, such combination being obvious to a person skilled in the art

"&" document member of the same patent family

Date of the actual completion of the international search	Date of mailing of the international search report
3 September 2020	20/11/2020

Name and mailing address of the ISA/	Authorized officer
European Patent Office, P.B. 5818 Patentlaan 2 NL - 2280 HV Rijswijk Tel. (+31-70) 340-2040, Fax: (+31-70) 340-3016	Tena Zaera, Ramon

1

Form PCT/ISA/210 (second sheet) (April 2005)

INTERNATIONAL SEARCH REPORT

International application No
PCT/IB2020/055988

C(Continuation). DOCUMENTS CONSIDERED TO BE RELEVANT

Category*	Citation of document, with indication, where appropriate, of the relevant passages	Relevant to claim No.
A	MICHAEL GIESE ET AL: "Cellulose nanocrystals in nanoarchitectonics - towards photonic functional materials", MOLECULAR SYSTEMS DESIGN & ENGINEERING, vol. 4, no. 1, 11 February 2019 (2019-02-11), pages 29-48, XP055727101, DOI: 10.1039/C8ME00065D the whole document	2-20
Y	THANH-DINH NGUYEN ET AL: "CdS Quantum Dots Encapsulated in Chiral Nematic Mesoporous Silica: New Iridescent and Luminescent Materials", ADVANCED FUNCTIONAL MATERIALS, WILEY - V C H VERLAG GMBH & CO. KGAA, DE, vol. 24, no. 6, 12 February 2014 (2014-02-12), pages 777-783, XP001588419, ISSN: 1616-301X, DOI: 10.1002/ADFM.201302521 [retrieved on 2013-10-24]	2-5, 10-15,17
A	page 782	7,19,20
Y	YANG GAO-LING ET AL: "Organometal halide perovskite quantum dots: synthesis, optical properties, and display applications", CHINESE CHEMICAL LETTERS, ELSEVIER, AMSTERDAM, NL, vol. 27, no. 8, 11 July 2016 (2016-07-11), pages 1124-1130, XP029743958, ISSN: 1001-8417, DOI: 10.1016/J.CCLET.2016.06.047	2-5,8, 14,15,18
A	page 1125 - page 1127; figures 1,5	7,19,20
Y	US 2016/380164 A1 (ANC MARIA [US]) 29 December 2016 (2016-12-29) paragraph [0072]; figure 2b	8
Y	US 2018/298278 A1 (ZHONG HAIZHENG [CN] ET AL) 18 October 2018 (2018-10-18)	6
A	paragraph [0153]; figure 11	7,19,20

1

INTERNATIONAL SEARCH REPORT

Information on patent family members

International application No
PCT/IB2020/055988

Patent document cited in search report	Publication date	Patent family member(s)	Publication date
US 2016380164 A1	29-12-2016	CN 107075357 A	18-08-2017
		EP 3172770 A1	31-05-2017
		US 2016027971 A1	28-01-2016
		US 2016380164 A1	29-12-2016
		WO 2016014299 A1	28-01-2016
US 2018298278 A1	18-10-2018	CN 104861958 A	26-08-2015
		EP 3296378 A1	21-03-2018
		JP 6609326 B2	20-11-2019
		JP 2018522959 A	16-08-2018
		JP 2020029559 A	27-02-2020
		KR 20180006941 A	19-01-2018
		KR 20200008667 A	28-01-2020
		US 2018298278 A1	18-10-2018
		WO 2016180364 A1	17-11-2016