March 6, 1928. 1,661,816

L. CICCONE

ENVELOPE FEEDING APPARATUS

Filed May 19, 1926 3 Sheets-Sheet 1

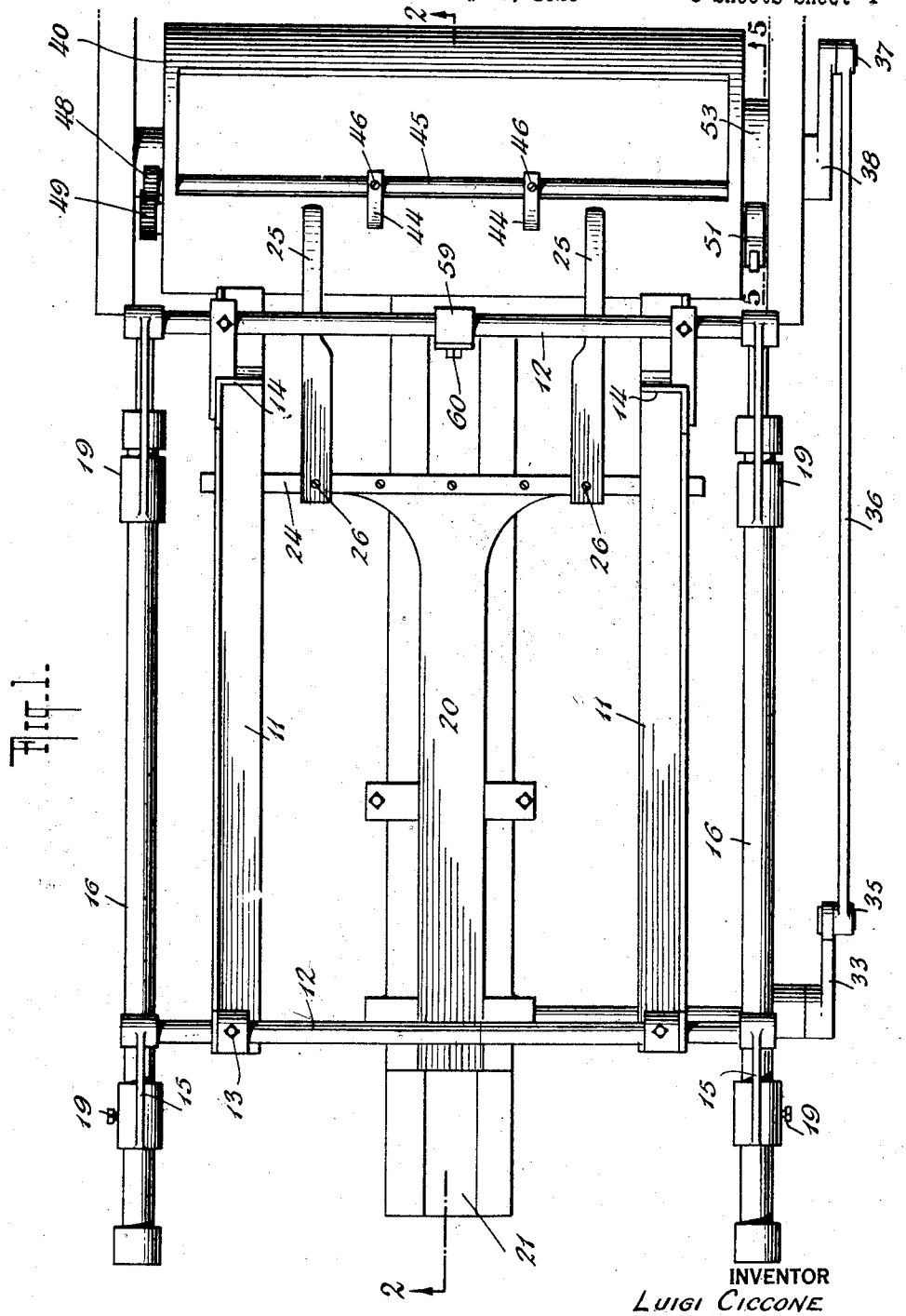

Fig. 1.

INVENTOR
LUIGI CICCONE
BY
Lyon, Kellenberger & Farley
ATTORNEYS

March 6, 1928. 1,661,816

L. CICCONE

ENVELOPE FEEDING APPARATUS

Filed May 19, 1926 3 Sheets-Sheet 2

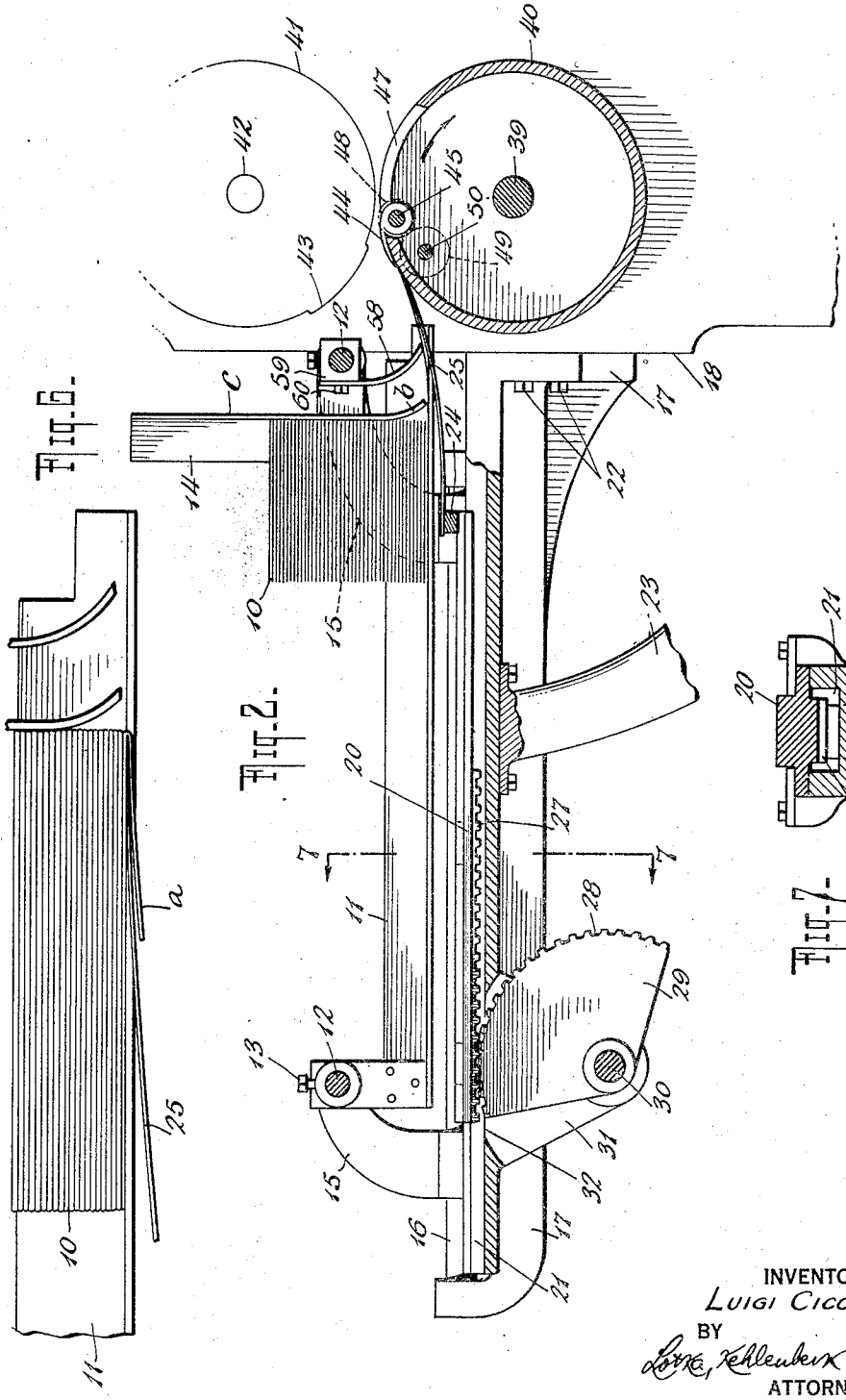

FIG. 2.

FIG. 7.

FIG. 5.

INVENTOR
LUIGI CICCONE
BY
Lowe, Kehlenbeck & Farley
ATTORNEYS

March 6, 1928. 1,661,816

L. CICCONE

ENVELOPE FEEDING APPARATUS

Filed May 19, 1926 3 Sheets-Sheet 3

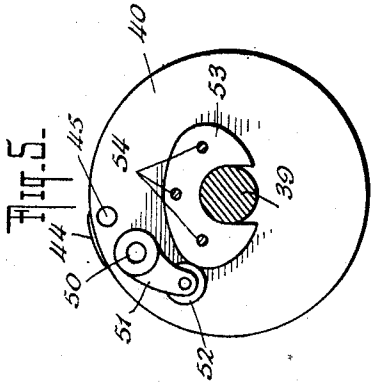

Fig. 5.

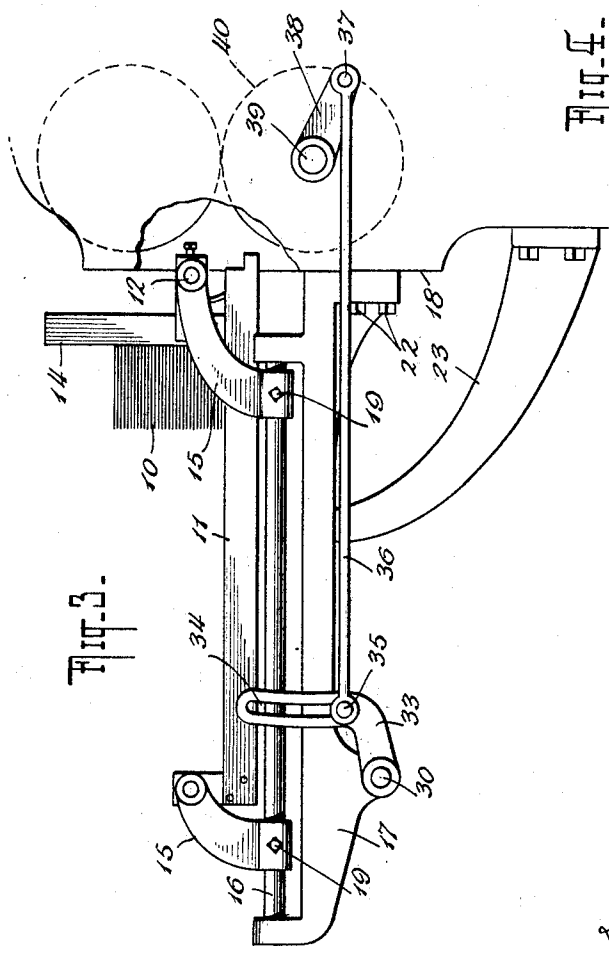

Fig. 3.

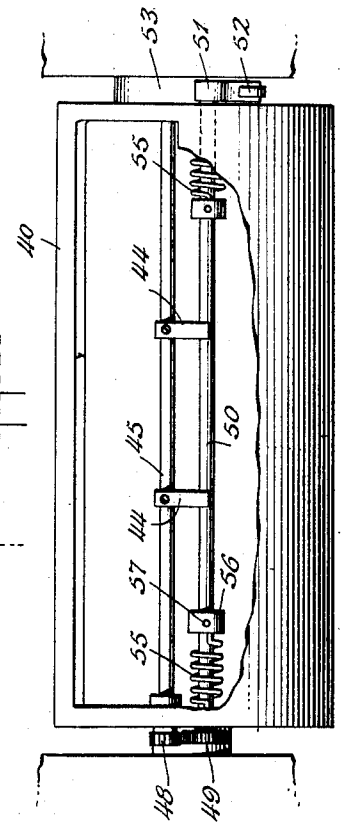

Fig. 4.

INVENTOR
LUIGI CICCONE
BY
Lacka, Kellenberg & Farley
ATTORNEYS

Patented Mar. 6, 1928. 1,661,816

UNITED STATES PATENT OFFICE.

LUIGI CICCONE, OF MASPETH, NEW YORK.

ENVELOPE-FEEDING APPARATUS.

Application filed May 19, 1926. Serial No. 110,142.

The invention relates to envelope feeding apparatus and more particularly to apparatus for feeding envelopes to printing machines by which the envelopes are printed; the invention has for its object to provide a novel mechanism whereby the envelopes may be successively fed from the lower end of a stack to a printing machine or its equivalent and carried thereby into printing or equivalent position.

Other more specific objects will appear from the description hereinafter and the features of novelty will be pointed out in the claims.

In the accompanying drawings which illustrate an example of the invention without defining its limits, Fig. 1 is a plan view of the novel apparatus; Fig. 2 is a longitudinal section on the line 2—2 of Fig. 1; Fig. 3 is an end elevation on a slightly smaller scale; Fig. 4 is a fragmentary plan view of one of the rollers of the printing machine; Fig. 5 is a detail sectional view on the line 5—5 of Fig. 1; Fig. 6 is a fragmentary view on an enlarged scale showing the feeding mechanism in engagement with the lower terminal envelope, and Fig. 7 is a fragmentary sectional view on the line 7—7 of Fig. 2.

A supply of envelopes to be printed, for instance with a corner card or otherwise, is arranged in the form of a stack, in which the flaps *a* of each envelope are at the bottom; this stack of envelopes 10 is carried by a supporting means, consisting of channelled side members 11, slidably mounted upon rods 12 and secured in an adjusted position on said rods in any suitable manner as by means of set screws 13. Upright channel members 14 extend upwardly from the side members 11 for the purpose of maintaining the stack in position on the supporting means as shown in Fig. 2. The lower ends *b* of the front webs *c* of the members 14 are preferably curved in the direction of the feed of the envelopes as shown by way of example in Fig. 2. The rods 12 are carried by brackets 15 which in turn are mounted upon bars 16 supported by main brackets 17; the latter are fixed in any conventional manner upon the frame 18 of the printing machine. It will be understood that the side members 11 of the supporting means are fixed in parallel spaced relation and are adjustably set apart to accommodate the particular size of envelopes contained in the stack 10; the adjustment of the side members 11 automatically adjusts the upright members 14 in their proper positions. In order to permit the stack 10 to be located in proper feeding relation to the printing machine, the brackets 15 may be adjustably mounted upon the bars 16 and secured in adjusted positions thereon in any convenient manner, as by means of set screws 19. In addition to the parts so far described, the apparatus includes a feeding slide 20, mounted for reciprocation in a recessed guide member 21, secured to the frame 18 by means of bolts 22 and supported in its intended horizontal position by means of a bracket 23, also mounted upon the frame 18 as shown in Fig. 3. At its forward end the slide 20 carries a transverse supporting member 24 upon which elastic fingers 25 are mounted in spaced parallel relation by means of screws 26. As shown in Figs. 2 and 6, the elastic fingers 25 curve or otherwise project upwardly in a normal position from the transverse member 24. Any suitable mechanism may be provided for reciprocating the slide 20 in the guide member 21; for instance, as shown in the illustrated example, the slide 20 may be provided upon its lower face with a rack 27 in mesh with the teeth 28 of a segment 29. The latter is carried by a shaft 30, journalled in bearings 31, which depend from the guide member 21 as shown in Fig. 2, said guide member 21 being provided with an opening 32 in registry with and for the accommodation of the toothed segment 29. The shaft 30 is rocked about its axis by means of any suitable mechanism and in the illustrated example, for this purpose, carries at one end a lever 33, provided with a slot 34, in which one end 35 of a link 36 is adjustably and pivotally secured in any convenient manner. The other end of the link 36 is pivotally connected at 37 with a crank 38, fixed upon a shaft 39 to which rotary motion may be imparted in any well known way. The shaft 39, in the illustrated example, carries the pressure roll 40 of the printing machine, which pressure roll 40 cooperates with the printing roll 41 to effect the printing operation; the printing roll 41 is fixed upon a shaft 42 and carries a printing plate or other printing device 43 in the well known way.

As shown in the drawings the pressure roll 40 is hollow and is provided with grip-

ping means comprising a pair of gripping fingers 44, adjustably secured upon a shaft 45 and fixed in adjusted positions thereon by means of screws or other fastening devices 46. The shaft 45 is journalled upon the roll 40 interiorly thereof and in registry with an opening 47 with which said roll is provided in its peripheral wall, said shaft 45 being located in close proximity to the one longitudinal edge of said opening, as shown in Figs. 1 and 2. The arrangement is such that the gripping fingers 44 project over the outer face of the roll 40 in directions away from the opening 47, as illustrated in Figs. 1 and 2. The shaft 45 receives a rocking movement to actuate the gripping fingers 44 for the purpose to be more fully set forth hereinafter by means of a pinion 48, secured upon said shaft 45, exteriorly of the roll 44 and meshing with a pinion 49, as shown in Figs. 1 and 4. The pinion 49 is carried by a shaft 50 also journalled on the roll 44 in the interior thereof, in parallel relation to the shaft 45 and provided at its opposite end exteriorly of said roll with an arm 51 upon the free end of which a roller 52 is journalled. The latter engages the peripheral surface of a cam member 53, secured to the frame 18 by means of bolts or other fastening devices 54, so as to occupy a stationary position with respect to the roll 44 and consequently with respect to the roller 52 and its associated parts. Coil springs 55 are provided upon the shaft 50 for exerting a rotative force thereon, tending to maintain the roller 52 in engagement with the cam 53 and to maintain the gripping fingers 44 in engagement with the surface of the roll 40; for this purpose one end of each spring 55 is secured in an appropriate manner to the roll 40, while the other end of each spring 55 is fastened to a collar 56, fixed upon the shaft 50 by means of set screws 57.

In order to prevent the envelope carried by the fingers 25 from passing out of its intended path as it is passed to the roll 40, a resilient controlling member 58 may be provided in the space between the stack of envelopes 10 and the rolls 40 and 41, as shown in Fig. 2. In the illustrated example this controlling member 58 depends from a block 59 adustably mounted upon the forward bar 12 and secured in position thereon, for instance, by means of a set screw 60.

In practice, a stack of envelopes 10 is placed upon the supporting means so as to be supported at its opposite ends by means of the side members 11 which previously have been adjusted with respect to each other to accommodate the particular size of envelope in the stack. Similarly, the brackets 15 have been shifted upon the bars 16 to position the stack proper feeding relation to the rolls 40 and 41. In this condition, the terminal envelope at the lower end of the stack bridges the space between the side members 11 so that its flap *a* drops slightly into the space between said side members, as indicated diagrammatically in Fig. 6. As the shaft 39 is rotated, the motion will be imparted to the crank 38 and to the link 36, and accordingly will bring about a rocking of the shaft 30 through the medium of the lever 33; by adjusting the pivot 35 of the link 36 in the slot 34 of the arm 33, the extent of rocking movement of the shaft 30 may be varied. In any case, the aforesaid actuation of the shaft 30 brings about a corresponding operation of the segment 29 and therefore through the medium of the teeth 28 and rack 27, causes the sliding member 20 to be reciprocated on the recessed guide 21; the extent of the reciprocatory movements of the slide 20 will depend upon the adjustment of the pivot 35 in the slot 34. At the same time, the rolls 40 and 41 will be rotated, the roll 40 carrying with it the shafts 45 and 50 and their associated parts. This causes the roller 52 to travel on the periphery of the cam 53 and through the medium of the pinions 49 and 48 oscillates the gripping fingers in directions toward and away from the surface of the roll 40, or in other words into and out of gripping position. As the gripping fingers 44 are moved to what may be termed "open positions" away from the surface of the roll 40, the springs 55 are placed under an increased tension. As the mechanism is thus operated, the slide 20 will finally reach a rearmost position in which the free ends of the fingers 25 are to the rear of the flap *a* of the lowermost envelope of the stack 10. Continuing in operation, the slide 20 will move forward and cause the fingers 25 to pass between the flap *a* and the envelope of which it forms a part, and to finally exert a pushing action upon the lowermost envelope, and thereby force it from beneath the stack and toward the printing rolls 40 and 41. In its passage from the stack 10 to the roll 40 the terminal envelope passes beneath the ends *b* of the upright members 14 and is maintained against rising out of its intended path by the controlling member 58. The extent of forward movement of the slide 20 is always such that the terminal envelope carried upon the elastic fingers 25 will be brought into surface engagement with the surface roll 40 and moved beneath the gripping fingers 44. It will be understood that the timing of the various operations is such that the gripping fingers 44 occupy an open position at the moment the elastic fingers 25 with the terminal envelope thereon reach their outermost delivery position. As soon as the envelope has been shifted into position beneath said gripping fingers, the operation of the cam 53 and the arm 51 with its roller 52 will shift the gripping fingers 44 into gripping engagement with

said envelope so as to clamp it upon the surface of the roll 40. The contour of the cam 53 is such that this return of the gripping fingers 44 to their gripping positions is quickly accomplished and amounts almost to a snap back into position under the influence of the springs 55. It will be understood that the fingers 44 grip the envelope along one of its edges to an extent sufficient to securely connect the envelope with the roll 40, but without materially encroaching upon the surface of the envelope. It will further be noted in Fig. 1 that the gripping fingers 44 are located between the elastic fingers 25 so that the latter may efficiently carry the envelope to its final position without interference with the gripping operation of the fingers 44. As the mechanism continues to function, the slide 20 will be shifted in a return direction to withdraw the elastic fingers 25 from the aforesaid terminal envelope; at the same time, the roll 40 will continue its rotation in the direction of the arrow in Fig. 2 and will carry the aforesaid envelope into position to be printed upon by the plate 43 or its equivalent of the roll 41. When the printing operation is completed, the cam 43 and its associated elements will cause the fingers 44 to be again adjusted to their open positions to thereby release the printed envelope, which may be removed from the printing mechanism in any conventional manner. As the above operative steps take place, the next successive envelope reaches the terminal position at the lower end of the stack, with its flap *a* in position to permit the elastic fingers to pass between said flap and the envelope as the operation of the mechanism continues.

From the above it will be clear that the envelopes in the stack are successively removed from the bottom thereof and carried upon the elastic fingers 25 to the gripping fingers 44 to be temporarily secured thereby upon the roll 40 and passed through the printing operations.

The steps enumerated above are repeated in mechanical sequence and bring about an efficient and continuous feeding of the envelopes from the stack to the printing machine. Because of the fact that the elastic fingers 25 pass between the flap and the body of an envelope, the feeding action of the mechanism is reliable and continuous; similarly, the action of the gripping fingers 44 is positive, so that a reliable co-action between the feeding means and the printing means is assured. The mechanism is adjustable to accommodate any size of envelopes.

Various changes in the specific form shown and described may be made within the scope of the claims without departing from the spirit of the invention.

I claim:

1. An envelope feeding mechanism comprising supporting means for a stack of envelopes, adjustable to accommodate various sizes of envelopes, a reciprocating slide, a supporting member carried by said slide and extending transversely thereof, elastic fingers having an inherent upward resiliency, secured upon said supporting member in spaced relation and arranged to pass between the flap and body of the terminal envelope of said stack for removing it therefrom, over a predetermined path, and a resilient controlling member for maintaining said envelope in said path against the resiliency of said fingers.

2. The combination of a roll, gripping fingers mounted thereon, a stationary cam, means on said roll movable thereby relatively to said cam to adjust said gripping fingers to and from gripping positions, supporting means for supporting a stack of envelopes adjacent to said roll, a reciprocating slide, elastic fingers carried by said slide for removing the terminal envelope from the lower end of said stack and delivering it to said gripping fingers to be gripped thereby, and means operatively connected with said roll for operating said slide in co-ordination with said gripping fingers.

3. The combination of a hollow roll, provided with and opening in its peripheral wall, a first shaft journalled interiorly of said roll adjacent to a longitudinal edge of said opening, a pair of gripping fingers carried by said shaft and projecting over the surface of said roll, a second shaft journalled interiorly of said roll and operatively connected with said first shaft, an arm fixed upon said second shaft exteriorly of said roll, a stationary cam co-operating with said arm to operate said shafts and adjust said fingers to and from gripping positions, supporting means for supporting a stack of envelopes adjacent to said roll in a manner to permit the flap of the terminal envelope at the lower end of said stack to drop, a reciprocating slide, a pair of fingers carried by said slide and arranged to pass between the flap and body of said terminal envelope to pass the same from said stack to the gripping fingers of said roll, and an operative connection between said roll and slide for operating the latter in co-ordination with said gripping fingers.

In testimony whereof I have hereunto set my hand.

LUIGI CICCONE.