F. W. WOLF, Jr. & H. H. SOUTHWORTH

REFRIGERATING APPARATUS.

APPLICATION FILED AUG. 22, 1910.

1,068,617.

Patented July 29, 1913.

3 SHEETS—SHEET 1

FIG. 1.

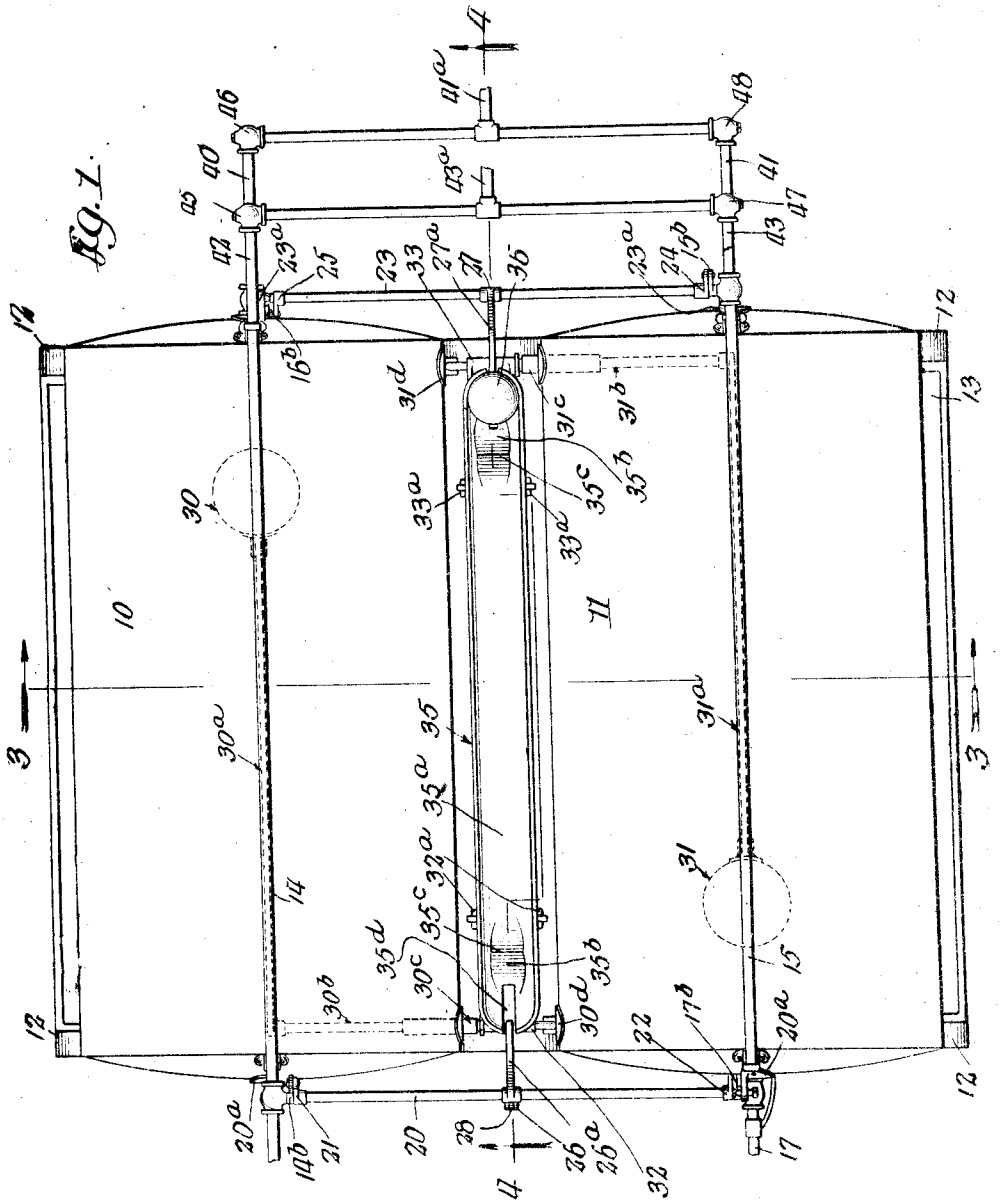

Witnesses:
F. H. Alfeds
H. R. Wilkins

Inventors:
Fred W. Wolf Jr.
Harrison H. Southworth
by Poole & Brown Attys

F. W. WOLF, JR. & H. H. SOUTHWORTH.

REFRIGERATING APPARATUS.

APPLICATION FILED AUG. 22, 1910.

1,068,617. Patented July 29, 1913

3 SHEETS—SHEET 2.

Fig. 2.

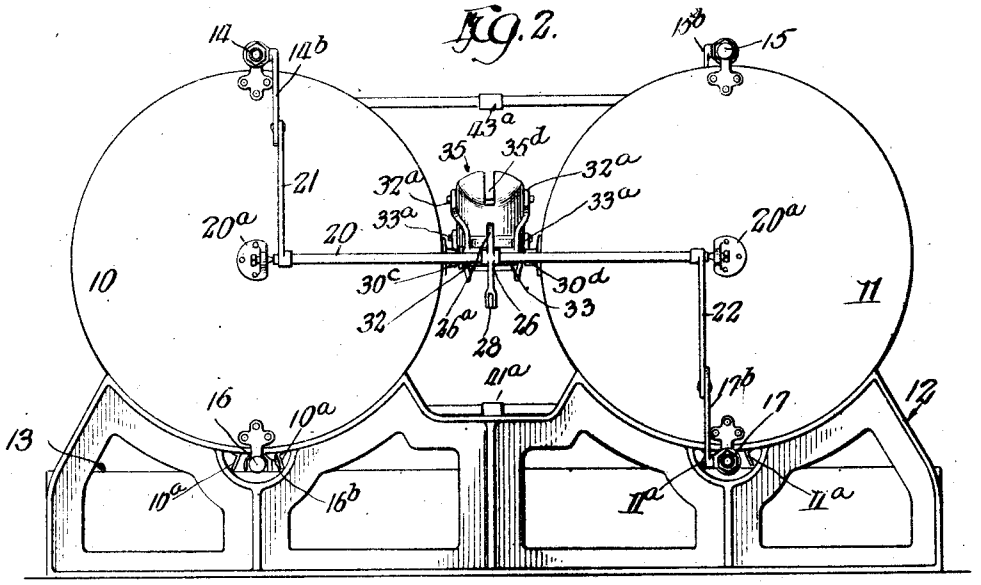

Fig. 3.

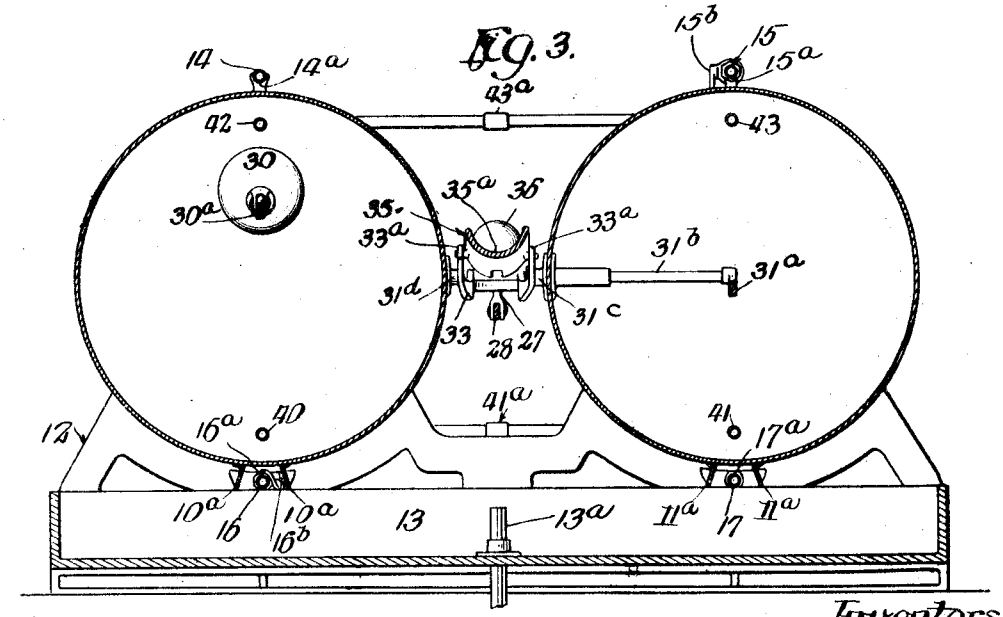

Witnesses:
F. N. Alfreds
G. R. C. Wilkins

Inventors.
Fred. W. Wolf, Jr.
Harrison H. Southworth
by Poole & Brown Attys

F. W. WOLF, Jr. & H. H. SOUTHWORTH.

REFRIGERATING APPARATUS.

APPLICATION FILED AUG. 22, 1910.

1,068,617.

Patented July 29, 1913.

3 SHEETS—SHEET 3.

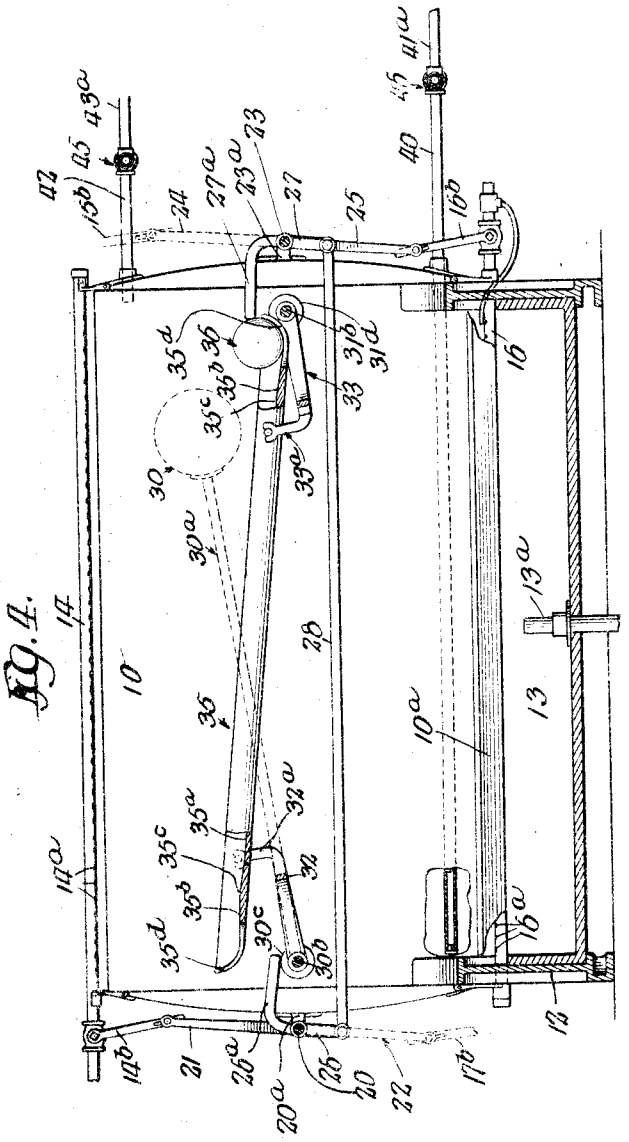

FIG. 4.

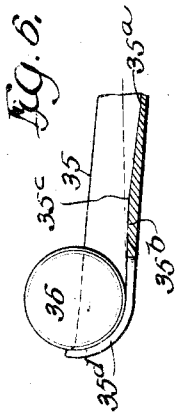

FIG. 6.

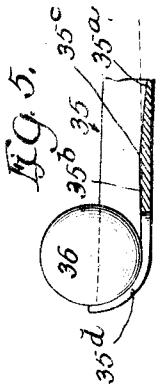

FIG. 5.

Witnesses:
P. A. Alfuds
L. A. Wilkins

Inventors
Fred. W. Wolf, Jr.
Harrison H. Southworth
by Poole & Brown Attys

UNITED STATES PATENT OFFICE.

FRED. W. WOLF, JR., AND HARRISON H. SOUTHWORTH, OF CHICAGO, ILLINOIS, ASSIGNORS TO ICELESS REFRIGERATOR COMPANY, OF CHICAGO, ILLINOIS, A CORPORATION OF ILLINOIS.

REFRIGERATING APPARATUS.

1,068,617. Specification of Letters Patent. Patented July 29, 1913.

Application filed August 22, 1910. Serial No. 578,328.

To all whom it may concern:

Be it known that we, FRED. W. WOLF, Jr., and HARRISON H. SOUTHWORTH, citizens of the United States, and residents of Chicago, in the county of Cook and State of Illinois, have invented certain new and useful Improvements in Refrigerating Apparatus; and we do hereby declare that the following is a full, clear, and exact description thereof, reference being had to the accompanying drawings, and to the letters of reference marked thereon, which form a part of this specification.

This invention relates to improvements in a refrigerating apparatus and particularly to improvements in refrigerating apparatus of the absorbent type. The invention is shown herein as applied to an apparatus of the alternating absorbent type. A refrigerating apparatus of this kind in its most familiar form usually includes two drums, each constituting a generator-absorber and each of which alternately contains weak liquor while the other contains strong liquor, the one containing the weak liquor being subjected to the action of cooling water and receiving the ammonia gas on its return from the refrigerating coil, while the other containing strong liquor is being subjected to the action of heat to drive off the ammonia gas which it has previously absorbed to the condensing coils, where the ammonia gas is condensed into liquid form and thence conveyed through an expansion valve beyond which it expands as a gas through the refrigerating coils and so back to the generator-absorber containing the weak liquor. After the capacity for absorption of the liquor in the weak liquor drum has been satisfied, the cooling water is diverted to the other drum which now contains weak liquor and the means for heating the latter drum, usually gas, is diverted to the first drum which formerly contained the weak liquor and now contains the strong liquor, so that the second drum now absorbs ammonia gas, while the first drum gives off ammonia gas. The shifting of the cooling water from one generator-absorber to the other, and also the shifting of the gas in the reverse direction from one generator-absorber to the other, has heretofore required manual operation and the object of the present invention is to provide an apparatus in which the shifting of the cooling water and of the gas supply is controlled automatically.

Our invention depends for its operation upon the fact that as the weak liquor in the one generator-absorber absorbs ammonia gas, the volume of said liquor increases in proportion to the amount of gas absorbed, while as the ammonia gas is driven off from the strong liquor in the other generator, the volume of the liquid in that tank is proportionately decreased. In carrying out our invention we have applied this principle mechanically to the operation of certain devices by means of which the cooling water is diverted to one generator-absorber and the gas supply is diverted to the other generator-absorber to correspond to the change of location of the weak and strong liquor.

In the drawings: Figure 1 is a top plan view of an apparatus embodying the novel features of our invention. Fig. 2 is a front elevation of the same. Fig. 3 is a transverse vertical section through the apparatus on the line 3—3 of Fig. 1. Fig. 4 is a longitudinal section through the apparatus on the line 4—4 of Fig. 1. Fig. 5 and 6 are detail sectional views to be referred to more particularly later.

In that embodiment of our invention illustrated in the drawings, 10 and 11 indicate drums of any usual or convenient construction adapted for use in connection with a refrigerating apparatus, each constituting a generator-absorber. Said drums are supported on a suitable base-frame 12.

13 is a tank adapted to receive the cooling water as it falls from the drums, and 13^a is a drain pipe from which the water in said tank may be led to any suitable place for disposal.

14 and 15 are the usual cooling water pipes rigidly supported in a position above the drums and running longitudinally thereof. Said water pipes have perforations 14^a, 15^a through which the water flows over the drums.

16, 17 are the usual gas burner pipes located under the drums and extending longitudinally thereof. They are provided with burner openings 16^a, 17^a and are protected from the cooling water flowing over the surfaces of the tanks by vanes or wings 10^a, 10^a and 11^a, 11^a secured to the respective tanks.

The supply of water to the pipes 14 and

15 is controlled by cocks operated respectively by levers 14^b and 15^b, the one lever 14^b in this instance being located at one end of the apparatus, while the other lever 15^b is located at the opposite end of the apparatus. The supply of gas to the burner pipes 16 and 17 is likewise controlled by suitable cocks operated respectively by levers 16^b, 17^b, said gas-cock operating levers being located at that end of their associated drums which is opposite to the end at which the lever controlling the water supply for that drum is located.

20 is a rock-shaft (see Fig. 2) which is suitably mounted in bearings 20^a, 20^a, secured to the front ends of the drums 10 and 11. 21, 22 are rock-arms rigidly secured at the ends of said rock-shaft 20 and pivotally connected by pins and slots, the one 21, to the lever 14^b which operates the cock controlling the water supply to the tank 10, while the other 22 is pivotally connected to the lever 17^b operating the cock which controls the gas supply to the burner pipe under the drum 11. This mechanism is duplicated at the opposite end of the apparatus where 23 indicates a rock-shaft mounted in bearings 23^a, 23^a, secured to the rear ends of the drums and 24, 25 indicate rock-arms rigidly secured to the ends of said rock-shafts. The rock-arm 24 is pivotally connected by a pin and slot to the lever 15^b which operates the cock controlling the water supply for the pipe 15 above the drum 11, and the rock-arm 25 is pivotally connected in a similar manner to the lever 16^b which operates the cock controlling the gas supply to the pipe 16 under the drum 10.

The rock-shafts 20 and 23 are connected so as to rock together by means of levers 26 and 27 rigidly connected respectively to the shafts 20 and 23 and a link 28 pivotally connecting said levers. Said levers 26 and 27 are provided with angular arms 26^a, 27^a above their respective rock-shafts, the purpose of which will presently appear.

In each tank is located a float which is adapted to rise and fall with the rising and falling level of the liquor in said tank. Said floats are each connected rigidly to a lever which operates a rock-shaft projecting through a suitable stuffing box in the wall of the associated drum.

30, 31 indicate the floats located respectively in the drums 10 and 11, each rigidly connected to an associated lever-arm 30^a, 31^a which is fixed to a rock-shaft 30^b, 31^b which projects through a stuffing box 30^c, 31^c secured in the wall of the drums 10, 11. The end of each rock-shaft is supported in a suitable bearing 30^d, 31^d secured to the opposite drum and the one rock-shaft is located in the front of the apparatus while the other is located in the rear of the apparatus. To the shaft 30^b is secured a rocking-bracket 32 having laterally separated arms 32^a which are pivotally connected to the front end of a runway 35. 33 is a similar rocking-bracket rigidly connected to the rock-shaft 31^b and having laterally separated arms 33^a, 33^a, which are pivotally connected to the rear end of said runway 35. 36 is a ball adapted to roll in said runway which is closed at its ends to limit the movement of said ball. The bottom 35^a of said runway on which said ball rolls is parallel to the length of the runway throughout its length except at each end where said bottom is made at an angle to the length of said runway as indicated at 35^b, 35^b, said angular deflections being separated from the main bottom of the runway by humps 35^c. This construction is clearly indicated in Figs. 5 and 6 which represent longitudinal sections of one end of the runway in different positions. Said runway is arranged so that the ball 36, when it rolls down the runway 35, will strike one of the angular extensions 26^a, 27^a of the devices 26, 27 depending in which direction the runway is inclined. The ends of the runway are provided with slots 35^d to permit said angular extensions 26^a, 27^a to project into the path of the ball.

Each drum is provided respectively with the usual intake pipes 40, 41 and the usual discharge pipes 42, 43 through which the ammonia gas is driven from the drum. The pipes 40, 41 are connected to a main pipe 41^a connected with the refrigerating coils, while the pipes 42, 43 are connected with a main pipe 43^a which leads to the usual condensing and cooling coils.

At 45, 46, 47 and 48 are located check-valves to control the entrance and exit of the gas into and from the respective drums in the usual manner.

The operation of the device is as follows: Consider the parts in the position indicated in the drawings in which the drum 10 contains strong liquor which is at a high level in said tank and the drum 11 contains weak liquor which is at a low level in the tank 11. At the same time the lever 16^b is in such position that the gas is burning in the burner-pipe 16 under the drum 10: the lever 14^b, in position such that the cooling water is turned off from the pipe 14 above said drum: while the levers 17^b and 15^b are in positions such that the gas is turned off in the pipe 17 below the drum 11 and the water is turned on through the pipe 15 above said drum. The drum 10 is thus being heated while the drum 11 is being cooled and gas is being continuously driven from the drum 10 while gas is being taken into and absorbed in the drum 11. This causes the level of the liquor in the drum 10 to gradually lower while that of the drum 11 gradually rises. In the same way the float 30 descends while the float 31 rises. This causes a cor-

responding shifting of the ends of the runway 35, the front end of the said runway descending while the rear end rises. The runway thus passes from the inclined position indicated in Fig. 4 through a horizontal position to an inclined position opposite to that shown in Fig. 4 with the rear end above the forward end. By reason of the inclination of the end of the runway, as shown at 35^b, said runway passes above the horizontal position without having any effect on the ball 36 as the part of the bottom 35^b does not reach the horizontal position until some time after the main bottom 35^a of said runway has passed the horizontal position. As soon as said runway, however, has become inclined sufficiently as a whole to incline the part 35^b at the rear end of said runway, the ball 36 passes over the hump 35^c between the two parts of the runway 35^a and 35^b and rolls down said trough. When it reaches the limit of its movement and is thus traveling at its highest speed, the ball strikes the angular extension 26^a of the lever 26. This rocks the shaft 20 and also through the link 28, the rock-shaft 23, and causes the rock-arms connected to said shafts to reverse the positions of the respective levers connected thereto, so as to shift the lever 14^b to turn on the cooling water in the pipe 14 above the drum 10, to shift the lever 16^b to turn off the gas supplied to the pipe 16 under the drum 10, to shift the lever 15^b so as to turn off the cooling water to the pipe 15 above the drum 11, and to shift the lever 17^b so as to turn on the gas supplied to the pipe 17 under the drum 11. The parts are thus reversed from what they were in the beginning, the drum 11 is now giving off gas, while the drum 10 is taking in and absorbing gas, and the float 31 in the drum 11 is at a high level, while the float 30 in the drum 10 is at a low level. The operation then continues as before with the float in the drum 11 falling and that in the drum 10 rising until the runway is raised to the position shown in the drawings, whereupon the ball rolls down the runway and operates against the rectangular extension 27^a of the lever arm 27 to move the respective levers back into the first position.

It will be apparent that the operation of the apparatus is continuous and entirely automatic, requiring no attention whatever after it has once been started. The apparatus is of particular advantage for use in connection with small refrigerators, where the employment of an attendant to give the requisite constant attention to its operation is not justified by economy.

While in illustrating our invention we have shown herein an apparatus embodying one embodiment of the invention, it is apparent that the details of construction may be modified in various ways without departing from the spirit of the invention and we do not wish to be limited in any way thereby except in so far as pointed out in the appended claims.

We claim as our invention:—

1. In a refrigerating apparatus of the alternating absorption type, including generator absorbers adapted for containing liquor, return pipes connected to said generator-absorbers, discharge pipes connected to said generator-absorbers, and cooling and heating means adapted to alternately cool and heat said generator-absorbers, a float located in each of said generator-absorbers adapted to follow the level of the liquor therein, a rock-shaft operated by each float, said rock-shafts projecting through the walls of said generator-absorbers, rock-arms rigidly connected to said rock-shafts, a runway having pivotal connection with each of said rock-arms, a rolling member adapted to run on said runway, means adapted to retain said rolling member at the higher end of said runway until it reaches the upper limit of its movement, and levers located at each end of said runway adapted to be struck by said rolling member, said levers controlling said cooling and heating means.

2. In a refrigerating apparatus of the alternating absorption type, including generator-absorbers adapted for containing liquid, return pipes connected to said generator-absorbers, discharge pipes connected to said generator-absorbers, and cooling and heating means adapted to cool and heat said generator-absorbers in alternation, a float located in each generator-absorber adapted to follow the level of the liquor therein, a rock-shaft operated by each float, said rock-shafts projecting through the walls of said generator-absorbers, rock-arms rigidly connected to said rock-shafts, a runway having pivotal connection with each of said rock-arms, a rolling member adapted to run on said runway, said runway having parts at each end inclined to its general direction adapted to retain the rolling member at the higher end thereof until that end has reached the upper limit of its movement, and levers located at each end of said runway adapted to be struck by said rolling member, said levers controlling said cooling and heating means.

3. In a refrigerating apparatus of the alternating absorption type, including generator-absorbers adapted for containing liquor, return pipes connected to said generator-absorbers, discharge pipes connected to said generator-absorbers, cooling water pipes adapted to supply cooling water to said generator-absorbers, burner pipes adapted for heating said generator-absorbers, and controlling means adapted to simultaneously control the supply of water and gas to said water pipes and gas pipes, a float located in

each generator-absorber adapted to follow the level of liquor therein, a rock-shaft operated by each float, said rock-shafts projecting through the walls of said generator-absorbers, rock-arms rigidly connected to said rock-shafts, a runway having pivotal connection with said rock-arms, a rolling member adapted to run on said runway, means adapted to retain said rolling member at the higher end of said runway until it reaches the upper limit of its movement, and levers located at each end of said runway adapted to be struck by said rolling member, said levers actuating said gas and water controlling means to cool and heat said generator-absorbers in alternation.

In testimony, that we claim the foregoing as our invention we affix our signatures in the presence of two witnesses, this 15th day of August A. D. 1910.

FRED. W. WOLF, JR.
HARRISON H. SOUTHWORTH.

Witnesses:
G. R. WILKINS,
T. H. ALFREDS.

Copies of this patent may be obtained for five cents each, by addressing the "Commissioner of Patents, Washington, D. C."