US 20040139689A1

(19) United States

(12) Patent Application Publication (10) Pub. No.: US 2004/0139689 A1

Sinha et al. (43) Pub. Date: Jul. 22, 2004

(54) NOVEL LOW COST IMPLEMENTATION OF A HIGH EFFICIENCY SOLAR ELECTRIC SYSTEM USING EXISTING BUILDING STRUCTURES

(75) Inventors: **Sunil Kumar Sinha**, Pleasanton, CA (US); **Milind Ganesh Weling**, Pleasanton, CA (US)

Correspondence Address:
SUNLIT SYSTEMS INC.
2815 EL CAPITAN DR.
PLEASANTON, CA 94566 (US)

(73) Assignee: **SUNLIT SYSTEMS**, Pleasanton, CA (US)

(21) Appl. No.: **10/248,455**

(22) Filed: **Jan. 21, 2003**

Publication Classification

(51) **Int. Cl.**[7] **E04D 13/18**

(52) **U.S. Cl.** **52/745.15**

(57) **ABSTRACT**

A technique for easily and cost effectively installing solar photo-voltaic solar panels is provided. Solar panels are installed on pre-existing building structures to minimize the cost of installation. Pre-fabricated and field configurable components are used for mounting the solar panels such that the cost and ease of installation is made even more favorable to an average solar electricity consumer. An example of such a cost-effective implementation includes installing solar panels on pre-existing fences demarcating residences or commercial office spaces. L-shaped brackets are screwed on to the fence pillars. Pre-cut and adjustable aluminum or wooden rails are then mounted on the horizontal protruding arms of the L-shaped brackets. Solar photo-voltaic panels are later fitted on to the rails. Finally, quick disconnects are used to hook-up the solar panels to the DC-to-AC inverter in a desirable configuration to form the electrical circuit. The ease of the installation coupled with the elimination of the need for its professional know-how targets this method of installation for the general public without formal solar electricity installation training.

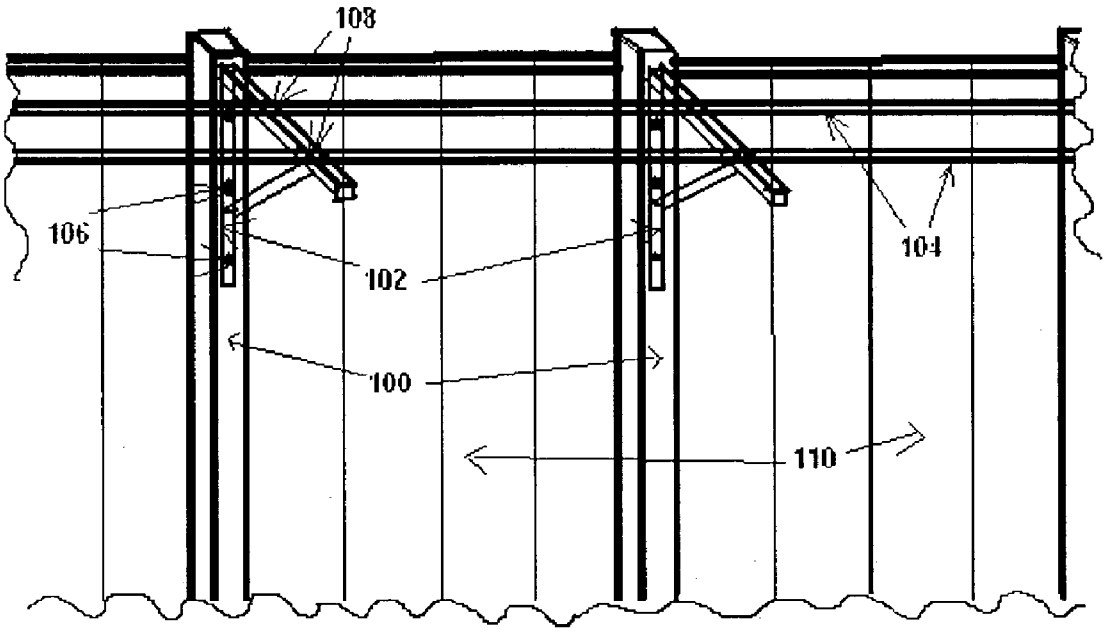

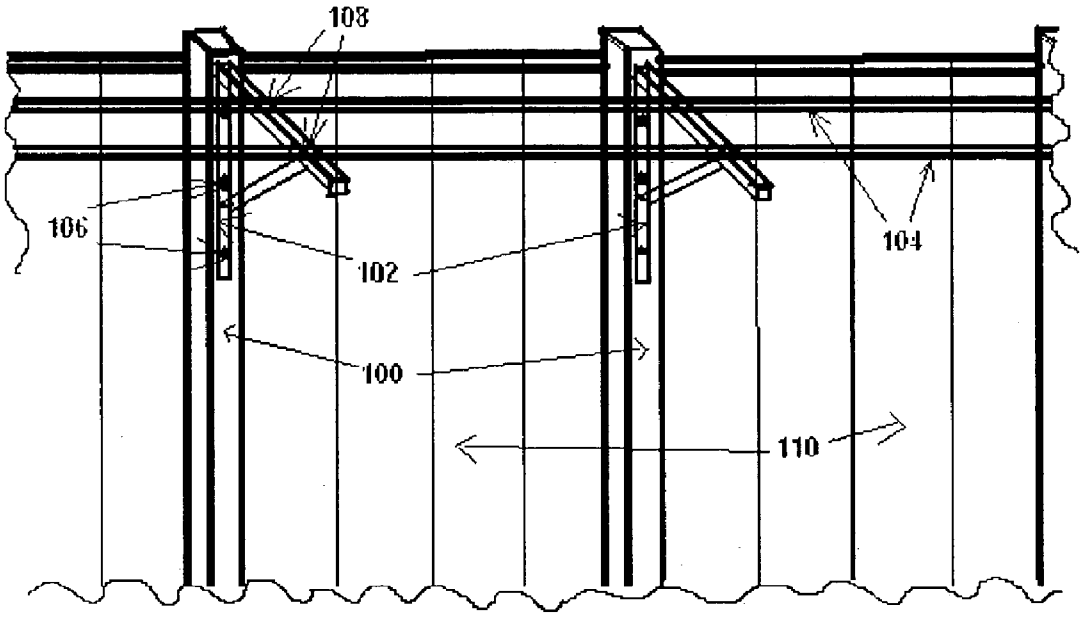

FIG. 1

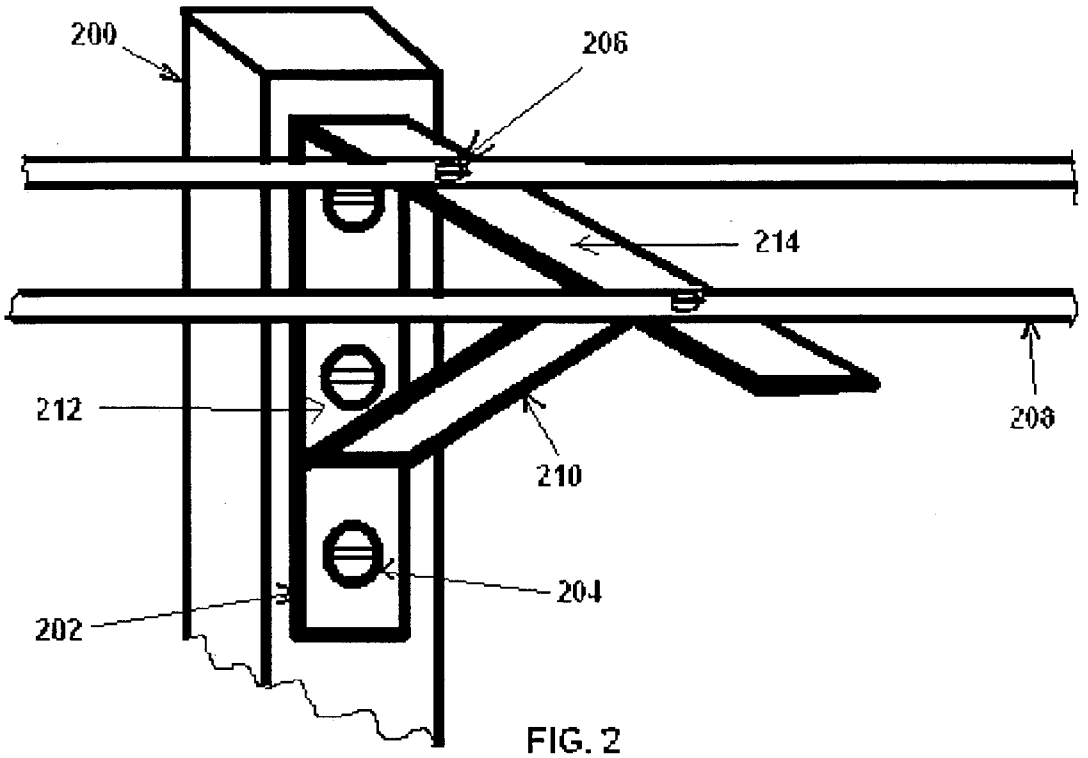

FIG. 2

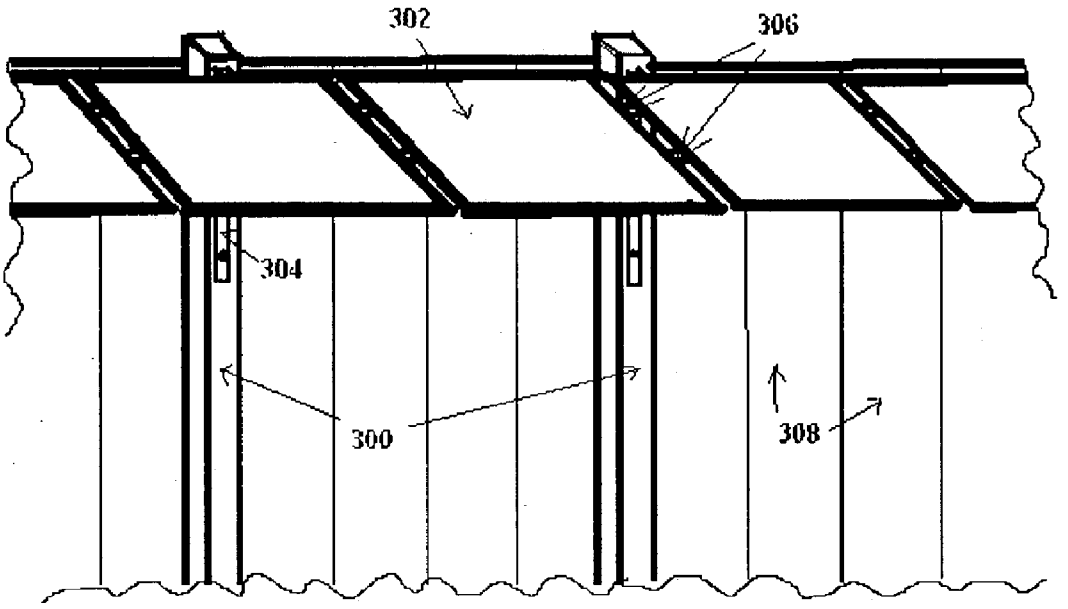

FIG. 3

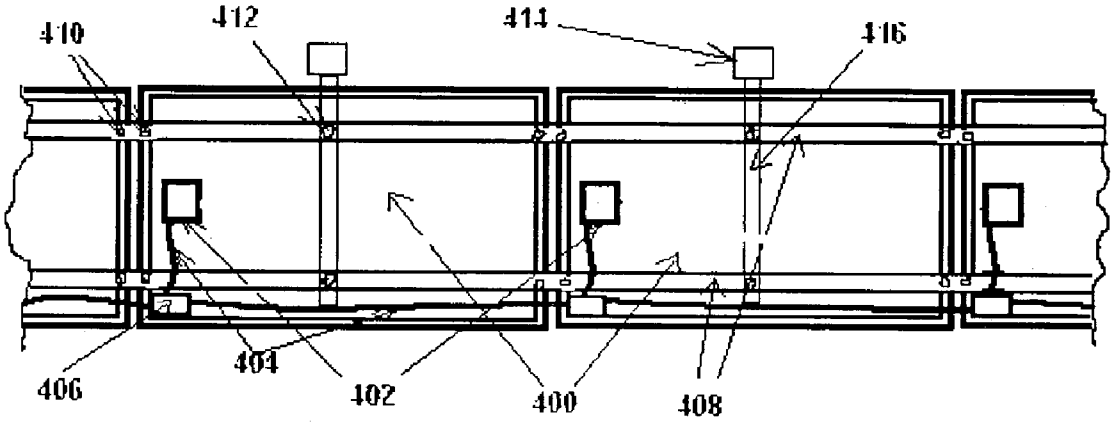

FIG. 4

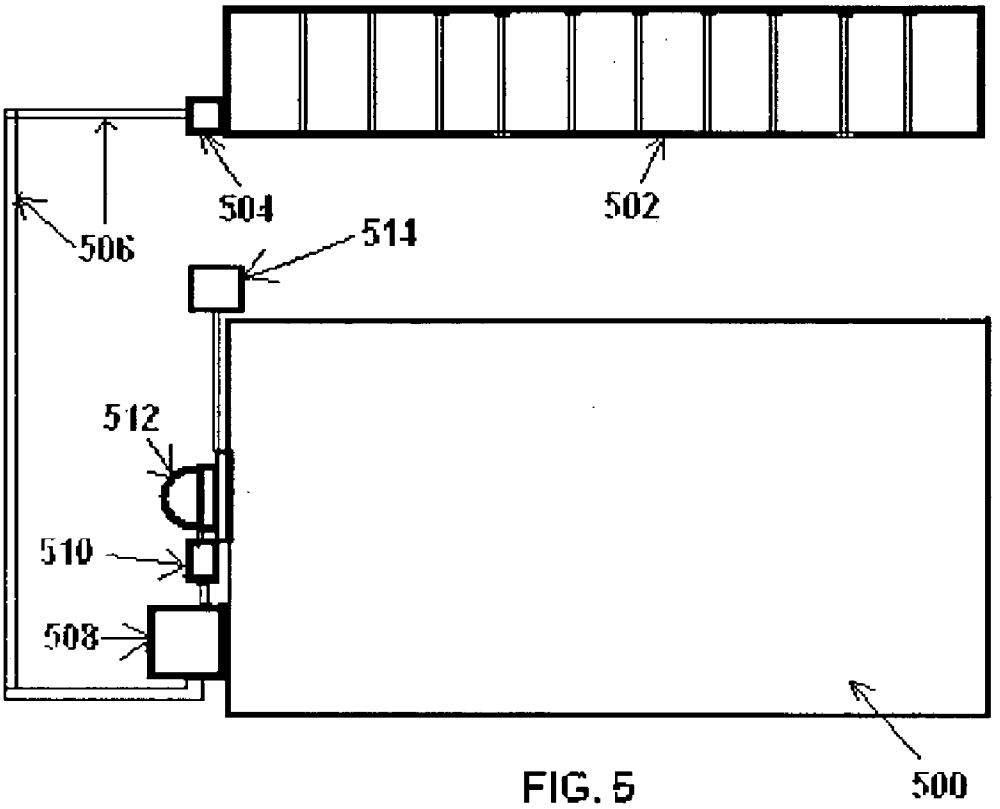

FIG. 5

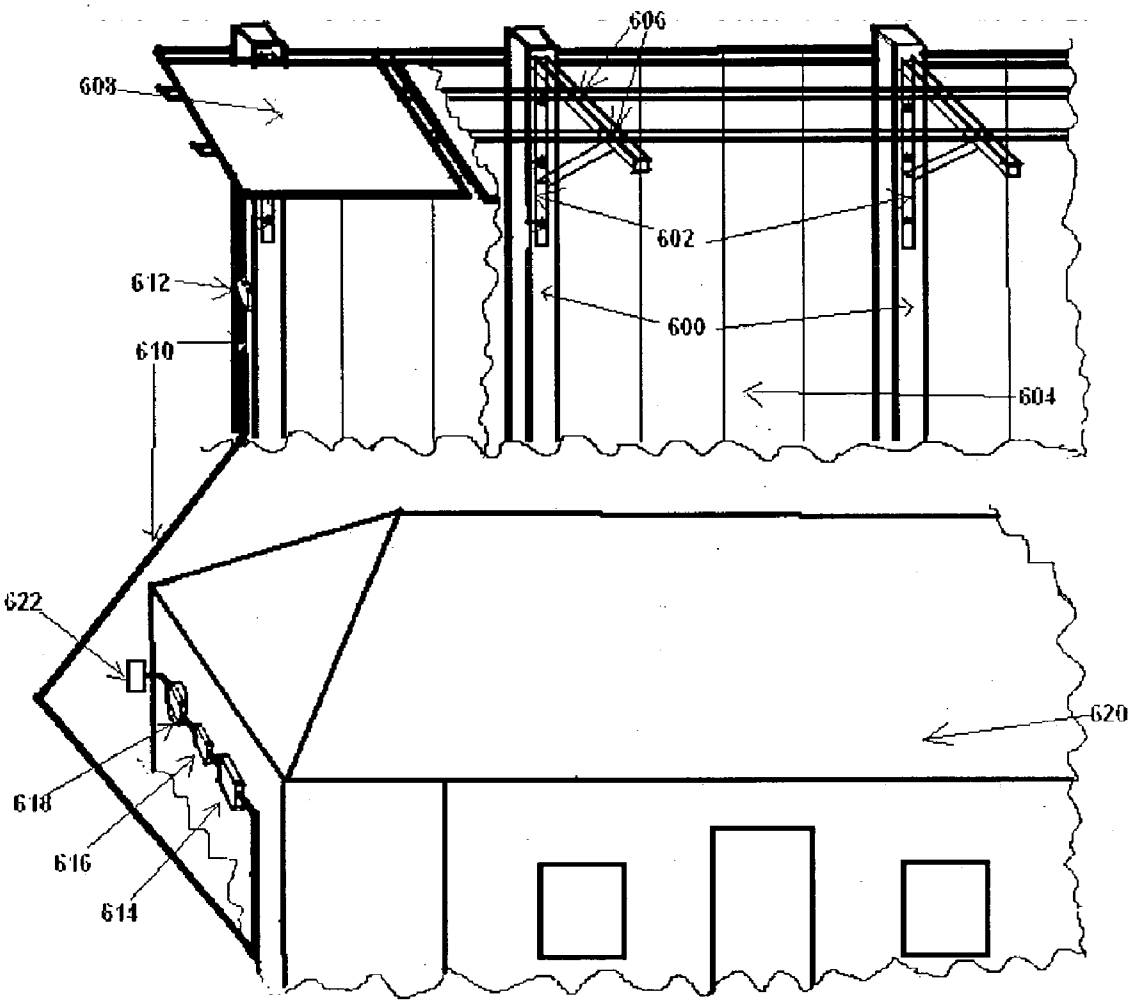

FIG. 6

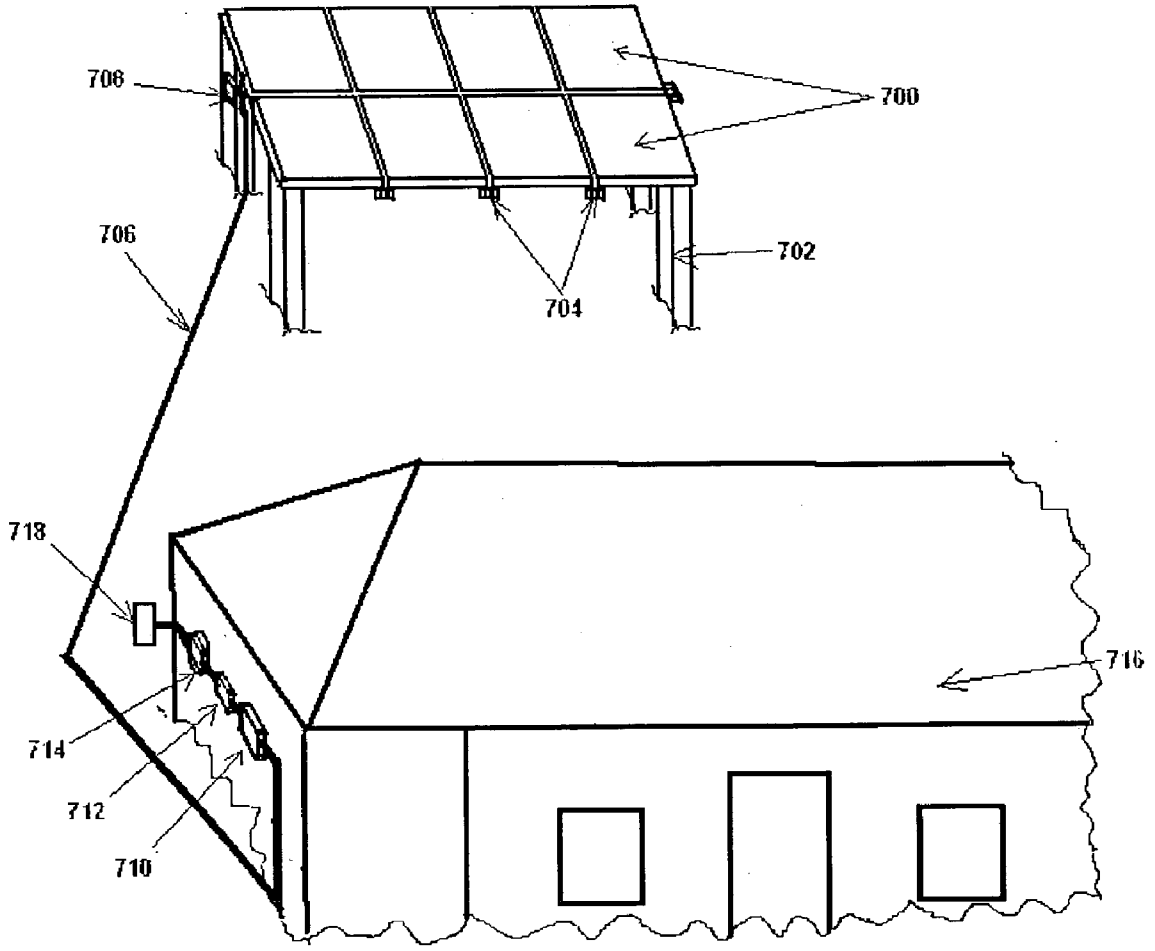

FIG. 7

NOVEL LOW COST IMPLEMENTATION OF A HIGH EFFICIENCY SOLAR ELECTRIC SYSTEM USING EXISTING BUILDING STRUCTURES

BACKGROUND OF INVENTION

[0001] 1. Field of the Invention

[0002] The present invention relates to the installation of solar energy systems. More particularly, the present invention relations to the installation of solar electric systems on pre-existing building structures, thereby simplifying the installation process and reducing its cost.

[0003] 2. Description of the Related Art

[0004] Harnessing energy from the sun has gained particular relevance in recent times. As human population and its endeavors towards comforts and industrialization, have grown rapidly in the latter part of the 20th century, consequently have the demands on energy exploded in modern times. Traditional means of producing energy, particularly electricity, have also proven to be increasingly and prohibitively detrimental to the environment from inevitable production of carbon dioxide. Guaranteeing an uninterrupted supply of electricity has become challenging due to unreliable and often limited supply of raw materials such as, coal and water.

[0005] These issues have generated tremendous interest in the research and implementation of various alternate and renewable energy sources, such as wind, sun and natural gas. Although these sources of energy are essentially at no cost for production, in the past, their practical implementations have been cumbersome and expensive. However, particularly in the case of solar energy, advances in semiconductor technology have made solar cells efficient and commercially viable. Arrays of solar cell panels can be aesthetically mounted over relatively small areas, to collect solar radiation. State government subsidies and federal rebates in the United States make solar energy installations all the more lucrative.

[0006] However, even with such advances in harnessing solar energy, its commercial acceptance has been muted. Reasons cited for its slow acceptance include cost, limited availability of installation space, lack of professional installers, lack of public awareness, etc.

[0007] There is an upfront lump-sum equipment, labor and installation cost for a solar electric system, which is typically in excess of 80 times the monthly electricity utility bill. Such a high lump sum amount, coupled with the relative acceptance of paying for electricity on a monthly basis, enforces the perception that solar electricity is expensive and unaffordable. The clear financial benefits of solar energy over a longer term (typically a period greater than 5 years) are often not apparent to a potential customer.

[0008] Secondly, space is always a premium for home or commercial real estate owners. Installing solar panels on the ground is one option for these solar electricity customers but it requires building strong enough foundations to withstand the forces of nature such as rain and wind. Installing solar panels on the roof of buildings is a second option. The difficulties and risks involved with working on roofs, which by default are well above the ground level, makes this option costly and challenging. Therefore, there is always a trade-off customers have to make between issues such as, losing precious ground space to a solar energy installation, installation costs, benefits of solar energy, aesthetics of solar panels, etc.

[0009] The third issue is that of limited availability and consequently, high cost for professional installation of solar electric systems. Installing and implementing a solar electric system requires knowledge of traditional skills such as building construction, roofing and electrical wiring plus the high technology know-how of photo-voltaic solar panels., inverters and other electronic components These two competency skills have traditionally been mutually exclusive from a professional standpoint—building contractors have not dealt with solar panels and professionals who understand solar panels typically do not know the specifics of building structures, roofing, etc. Professionals and companies that offer solar electric system installation solutions by combining these different skills, are therefore, few in number. Consequently, solar electric system installation as become a niche business, thereby increasing installation cost to the consumer.

[0010] Lastly, there has been a general lack of awareness with respect to the use of solar energy for electricity generation. Common myths include a misconception that solar electricity is only viable for large utility power plants. Also some people think that solar electricity generation is similar to or is equally inefficient and/or cumbersome as solar heat absorption-based solar water heaters. There is also a skepticism about the high technology associated with solar cells in photovoltaic panels—do they really offer a commercially viable alternative to getting power from commercial utilities or are they just something overly optimistic and futuristic ideas that are far from maturity. All these questions and trepidations have prevented the consumer from realizing the true potential of solar generation of electricity.

[0011] However, in contrast to people's misconceptions, solar energy offers good financial and environmental benefits to the masses. For instance, using United States Environmental Protection Agency (EPA) estimates and in approximate terms, the equivalent of 3000 Watts of solar energy-based photovoltaic system capacity, as is typically needed by a single family residence, conventional thermal electricity production releases harmful gases in the amounts of 7700 lbs of carbon dioxide and 2 lbs of nitrogen oxides per year. The carbon dioxide emissions alone, are equal to the emissions of driving 9600 miles in an average passenger car or the carbon dioxide absorbed by approximately 1 acre of trees in one year. Moreover, in the State of California, using the financial benefits of a 50% subsidy towards parts and labor of a solar electricity installation and a state income tax break of an additional 15%, a consumer would have an one-time out-of-pocket expense of $10500 but would not have to pay for electricity for the expected 40 year life of the solar electric system. Alternately, financing this solar electricity installation at a 6.5% per annum interest rate, a 30 year term and a 35% income tax credit on the interest paid, would result in a net monthly gain of $44. Therefore, increasing the mass acceptance of solar electric systems is justified from a financial and an environmental stand-point.

[0012] To achieve this goal of making solar energy more appealing to the public for residential and commercial applications, it is necessary to address the challenges and

issues mentioned above. Our invention reduces the cost and simplifies the installation of solar electric systems which should result in their rapid acceptance by the masses. The details of this invention are presented next.

SUMMARY OF INVENTION

[0013] Broadly speaking, we propose an invention that simplifies the installation of solar electric systems and thereby increase their mass acceptance.

[0014] In the first embodiment, our invention uses existing building structures such as fences for installing solar electric panels. Pre-existing fences typically used for demarcating residential boundaries are used as the basic building blocks for our easy solar installation. Medium or relatively heavy-duty L-shaped brackets are screwed on to the top portion of the fence pillars. Pre-fabricated and configurable aluminum rails or wooden plates are then screwed on to the horizontal legs of the L-shaped bracket. Solar photo-voltaic panels are then fastened on to the rails or wooden plates. Finally, quick disconnects are used to hook-up electrical wires to the solar panels in a pre-configured electrical circuit. The electrical circuit comprises of solar panels that generate DC electricity which is fed to a DC-to-AC inverter. The inverter feeds AC electricity through a power measuring meter to a power grid. Considering the use of pre-existing building structures such as fences, and commonly used and familiar components such as brackets and screws, the elimination of the need to climb on to roofs and the installation ease of quick disconnects and flexible rails, it is mainly expected that the solar panel installation will be done by customers, themselves, with no professional training or know-how of solar system installation. In other words, our invention will offer solar energy installations in the form of a do-it-yourself kit for the general public to implement.

[0015] In the second embodiment, we use easy to assemble instead of pre-existing building structures for installing solar electric panels. Structures which can be put together easily include gazebos, patio covers or window awnings. These structures are commercially available at reasonable prices and are also available in a variety of sizes, styles and colors to suit a customer's needs and tastes. Pre-fabricated and configurable aluminum rails or wooden plates are screwed on to the top surface of such structures. Solar electric panels are mounted on to these rails and then electrically connected to a DC-to-AC inverter to generate electricity.

BRIEF DESCRIPTION OF DRAWINGS

[0016] **FIG. 1** is an overview of fence mounting for solar electric system embodiment of the present invention.

[0017] **FIG. 2** is an overview of fence mounting as solar electric system with photovoltaic panels mounted.

[0018] **FIG. 3** is a detailed diagram of a "L"bracket assembly embodiment of the present invention showing attachments to the post of the fence.

[0019] **FIG. 4** is a top view of the full fence mounted solar electric system with the electrical attachments to the building.

[0020] **FIG. 5** is a bottom view of the photovoltaic panels mechanical and electrical attachments.

[0021] **FIG. 6**

DETAILED DESCRIPTION

[0022] **FIG. 1** illustrates the side view of the preferred embodiment of our present invention of a fence as a pre-existing building structure used for mounting a solar electric system. In this figure, we show a section of such a fence which extends and repeats towards the left and right of the paper. It includes the typical elements of a fence, such as pillars, **100**, which are rigidly planted in the ground, and wooden planks or panels, **110**, which are fixed alongside each other between the fence pillars, **100**. Pillars, **100**, and panels, **110**, form the basis of most fences. The modifications, we propose, include attaching the vertical arms of a L-shaped bracket, **102**, to the fence pillars, using screws, **106**. Adjustable and configurable rails, **104**, are then fastened to the horizontal arms of the L-shaped brackets, **102**, using screws, **108**.

[0023] **FIG. 2** shows an enlarged and more detailed view of the elements which are key to our invention. The L-shaped bracket is illustrated as **202**, with screws, **204** used to attach the vertical arm, **212** of the bracket to pillar, **200**. To better support the horizontal arm, **214**, of the bracket and reinforce the corner joint of the "L" in the bracket, an angled arm, **210** is used and is welded or joined at the ends to the vertical and horizontal arms. Finally, this figure shows horizontal rails, **208**, are mounted on the horizontal arm, **214**, of the bracket using screws, **206**.

[0024] A solar panel installation is demonstrated in side view in **FIG. 3**. As previously described in **FIG. 1** or **2**, fence elements namely, pillars, **300**, and fence panels, **308**, are shown in this figure. Also included is the L-shaped bracket, **304**, and the horizontal rails, **306**. Additionally, shown in this figure are solar electric photo-voltaic panels, **302**, which are mounted easily on the rails, **306**. The solar panels are typically mounted flush with the top edge of the fence panels and are orthogonal (90 degrees angle) to the fence pillars. Considering that the fence panels are typically the height of an average person, the solar panels are approximately just above (3 to 6 inches) the eye level for a standing person and are therefore, barely visible in side view. This makes the solar panel installation, non-intrusive from an aesthetic standpoint.

[0025] **FIG. 4** shows the plan view of the solar panel installation looking bottom-up from the ground. The fence pillar is shown in cross-sectional view by notation, **414**. The horizontal adjustable rails, **408**, are attached to the horizontal arms of the L-shaped brackets, **416**, with screws, **412**. The solar panels, **400**, are shown mounted on the rails, **408** using screws or quick disconnect fasteners, **410**. The electrical connections are made using wiring harnesses, **404**, traversing from panel-to-panel and finally, to the inverter (not shown). **402** is the electrical connection box for each of the solar panels, and is attached to the under surface of the panels by the panel manufacturers. Using quick electrical disconnects, **406**, the wiring harnesses, **404**, and panel connection boxes, **402** are electrically hooked up in a desired pre-configured circuit.

[0026] **FIG. 5** shows the block diagram of typical electrical connections for a solar electric system. A house or a

commercial site where solar electricity is being generated using our invention, is denoted as **500**. A bank of solar panels, **502**, mounted on a fence, is also shown. **504** is a DC disconnect switch connects the end solar panel to the inverter, **508**, using electrical wires, **506**. The DC disconnect switch, which is typically mounted on a fence pillar, is used to isolate the solar panels electrically from the inverter for preventive maintenance or if required, in an emergency. Electrically downstream to the inverter is an AC disconnect switch, **510**, which further connects to a two-way electricity usage meter, **512**. The AC disconnect switch, **510** is used to isolate the solar electricity generation unit comprised of elements, **502**, **504**, **506** and **510**, from the power grid, **514**, whenever desired or in an emergency. On the other end, the meter, **512** connects to the electricity utility power grid. The meter quantifies the amount of electricity supplied to the grid and used from the grid and is used by the individual solar electricity generator and the utility company to determine the net rebates or charges between the two of them. The inverter, AC disconnect switch and the two-way electricity usage meter are typically mounted on a rack on an inner wall in the garage of a house or a utility room of a commercial site.

[**0027**] The various components of a solar electric installation using our invention are illustrated as a schematic in **FIG. 6**, for further clarity. A house or a commercial site where solar electricity is being generated, is denoted in this figure as **620**. Fence pillars in this figure are denoted as **600** whereas fence panels are shown by the notation **604**. A L-shaped bracket. The horizontal adjustable rails, **606**, are attached to the horizontal arms of the L-shaped bracket, and solar panels, **608** are affixed to these rails. The solar panels are electrically connected in a pre-decided configuration and feed in to the DC disconnect switch, **612**. Electrical wires, **610**, connect the DC disconnect switch to an inverter, **614**. Electrically downstream to the inverter is the AC disconnect switch, **616**, followed by the two-way electricity usage meter, **618**. The meter is connected at the other end to the utility power grid.

[**0028**] As described in the "Summary of Invention" section, an alternate embodiment involves solar panel installations on easy-to-assemble structures, as shown in **FIG. 7**. An example of such a structure is a gazebo, as denoted by **702**. In this case, the gazebo is a free standing structure, placed outside the house or commercial site, **716**. Solar panels, **700**, are mounted on the gazebo, using adjustable rails, **704**. These photo-voltaic panels generate DC electricity and feed it through a DC disconnect switch, **708**, and electrical wires, **706** to the inverter, **710**. Similar to the preferred embodiment and as described in **FIG. 6**, the inverter, **710** connects to an AC disconnect switch, **712**, a two-way electricity usage meter, **714**, and finally to the power grid, **716**.

We claim in this invention:

1. A method for installing solar energy systems, the method comprising:

using pre-existing building structures as the basic load-bearing structures for such an installation;

installing solar energy systems on these existing structures.

2. A method for installing solar energy systems as recited in claim 1, wherein the basic building structure is a fence such as those used for demarcating boundaries between residential or commercial plots.

3. A method for installing solar energy systems as recited in claim 1, where in the solar energy system is selected from a group of solar electric systems or solar heating systems.

4. A method for installing solar energy systems as recited in claim 3, wherein the solar electric systems comprises of arrays of solar photo voltaic cells to form larger panels.

5. A method for installing solar energy systems, the method comprising:

using pre-existing building structures as the basic load-bearing structures for such an installation;

using a plurality of connectors and joints to fasten to the building structures;

mounting adjustable rails on to the connectors;

installing solar panels on these rails; and

connecting the solar panels in a desired electrical circuit to generate electricity.

6. A method for installing solar energy systems as recited in claim 5, wherein the basic building structure is a fence such as those used for demarcating boundaries between residential or commercial plots.

7. A method for installing solar energy systems as recited in claim 5, wherein the solar panels are comprised of a single solar photo-voltaic cell or an array of solar photo-voltaic cells.

8. A method for installing solar energy systems as recited in claim 5, wherein the connectors are L-shaped brackets made of materials selected from a group of aluminum, iron, their composites and wood.

9. A method for installing solar energy systems as recited in claim 5, wherein the adjustable rails are made of materials selected from a group of aluminum, iron, their composites and wood.

10. A method for installing solar energy systems as recited in claim 5, wherein the solar panels are installed on the rails using fasteners such as screws and nuts and bolts or using quick-disconnect fasteners.

11. A method for installing solar energy systems as recited in claim 5, wherein the solar panels are electrically connected to a DC-to-AC inverter to generate electricity for household, institutional or commercial use.

12. A method for installing solar energy systems, the method comprising:

using easy-to assemble building structures as the basic load-bearing structures for such an installation;

using a plurality of connectors and joints to fasten to the building structures;

mounting adjustable rails on to the connectors;

installing solar panels on these rails; and connecting the solar panels in a desired electrical circuit to generate electricity.

13. A method for installing solar energy systems as recited in claim 12, wherein the basic building structure is selected from a group that includes but is not limited to a gazebo, a patio cover and a window awning.

14. A method for installing solar energy systems as recited in claim 12, wherein the solar panels are comprised of a single solar photo-voltaic cell or an array of solar photo-voltaic cells.

15. A method for installing solar energy systems as recited in claim 12, wherein the connectors are L-shaped brackets made of materials selected from a group of aluminum, iron, their composites and wood.

16. A method for installing solar energy systems as recited in claim 12, wherein the adjustable rails are made of materials selected from a group of aluminum, iron, their composites and wood.

17. A method for installing solar energy systems as recited in claim 12, wherein the solar panels are installed on the rails using fasteners such as screws and nuts and bolts or using quick-disconnect fasteners.

18. A method for installing solar energy systems as recited in claim 12, wherein the solar panels are electrically connected to a DC-to-AC inverter to generate electricity for household, institutional or commercial use.

* * * * *