H. GAARA.

CYLINDER MACHINE FOR STRAINING WOOD PULP AND FOR SIMILAR PURPOSES.

APPLICATION FILED JUNE 3, 1908.

953,744.

Patented Apr. 5, 1910.

2 SHEETS—SHEET 1.

Fig. 1.

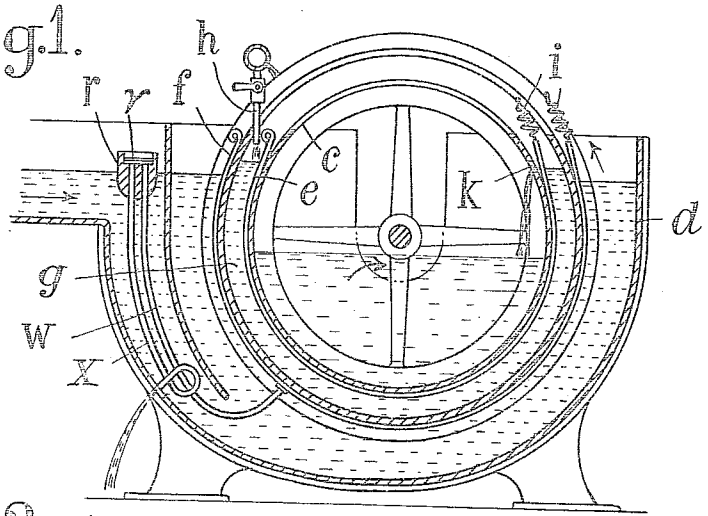

Fig. 2.

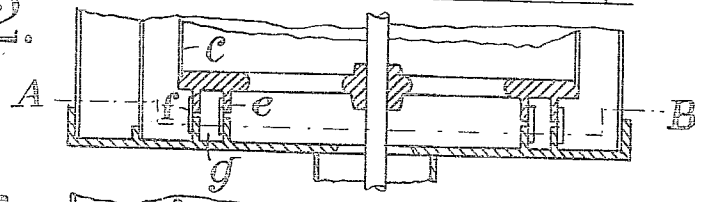

Fig. 3.

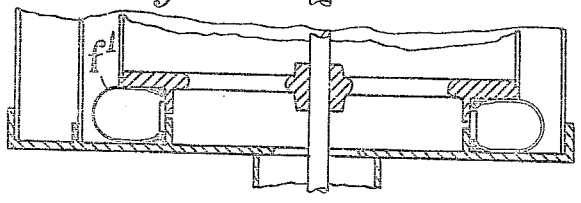

Witnesses:
[illegible]
Wm H Strang

Inventor:
Halvor Gaara
by [illegible]
Att'y.

ANDREW B. GRAHAM CO., PHOTO-LITHOGRAPHERS, WASHINGTON, D. C.

H. GAARA.

CYLINDER MACHINE FOR STRAINING WOOD PULP AND FOR SIMILAR PURPOSES.

APPLICATION FILED JUNE 3, 1908.

953,744.

Patented Apr. 5, 1910.

2 SHEETS—SHEET 2.

Fig. 4.

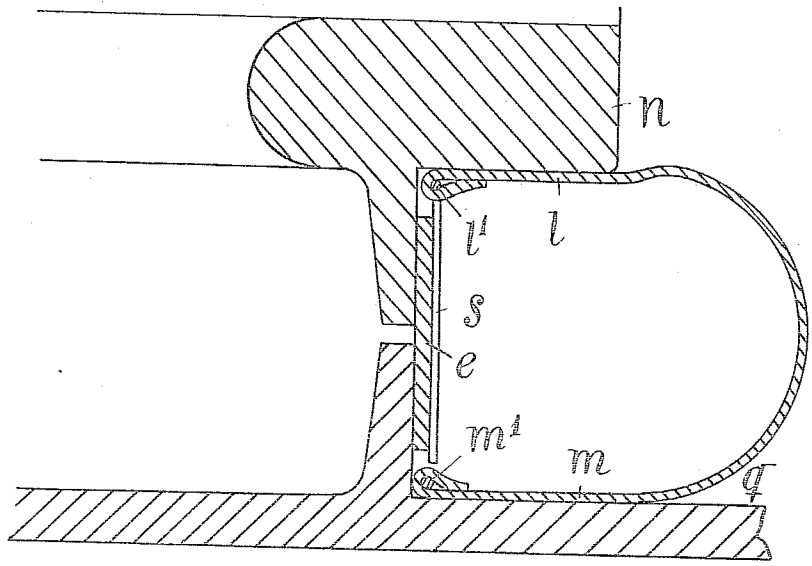

Fig. 5.

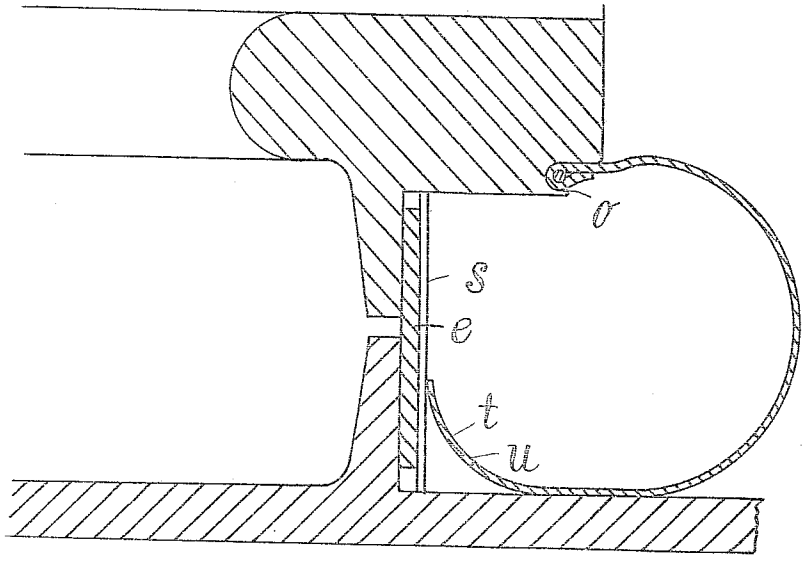

Witnesses:
[illegible]
Wm H Strang

Inventor:
Halvor Gaara
by [illegible]

ANDREW B. GRAHAM CO., PHOTO-LITHOGRAPHERS, WASHINGTON, D. C.

UNITED STATES PATENT OFFICE.

HALVOR GAARA, OF BÖ, NORWAY.

CYLINDER-MACHINE FOR STRAINING WOOD-PULP AND FOR SIMILAR PURPOSES.

953,744. Specification of Letters Patent. Patented Apr. 5, 1910.

Application filed June 3, 1908. Serial No. 436,343.

To all whom it may concern:

Be it known that I, HALVOR GAARA, a subject of the King of Norway, residing at Bö, Telemarken, Norway, have invented certain new and useful Improvements in Cylinder-Machines for Straining Wood-Pulp and for Similar Purposes; and I do hereby declare the following to be a full, clear, and exact description of the invention, such as will enable others skilled in the art to which it appertains to make and use the same, reference being had to the accompanying drawings, and to letters of reference marked thereon, which form a part of this specification.

The invention relates to cylinder machines for straining wood pulp, and similar purposes, and refers more particularly to means, whereby the rotating cylinder is made tight against the side walls of the vat.

With this end in view, my invention consists in forming between the side walls of the rotating cylinder and the walls of the vat in which the cylinder revolves a space closed off both inwardly and outwardly and adapted to hold water of a higher pressure than the water contained in the vat, whereby any leakage from the vat into the interior of the rotary cylinder is absolutely prevented.

In the accompanying drawings, Figure 1 is a vertical section through a cylinder machine on the line A—B of Fig. 2, Fig. 2 is a horizontal section through one side of the machine, Fig. 3 a similar section as Fig. 2, showing a modification, Fig. 4 is an enlarged sectional view of a portion of the machine according to Fig. 3, and Fig. 5 is a similar view showing a modification.

The cylinder *c* is rotatably mounted in the vat *d*.

e is the usual packing provided between the side walls of the vat *d* and the cylinder *c*. *f* is an additional packing in accordance with my invention. The packings *e* and *f* are so arranged that between them an annular chamber *g* is formed, into which water may be conducted through a pipe *h*. In order to maintain a uniform tension of the packing rings *e* and *f*, helical springs *i* may be secured at one end thereto. Whether the additional packing *f* is arranged outside of the packing *e*, as shown in the drawing, or inside thereof is irrelevant. At the level of the desired height of the water in the annular chamber *g* an opening *k* may be provided through which the excess of water in the chamber *g* can flow into the cylinder. This opening is disposed a little above the level of the water in the vat. If a certain distance between the water levels in the vat and the annular chamber *g* shall be maintained, a float valve *r* may be provided in such a way as to allow water to flow from the lower part of the annular chamber into said valve through a flexible tube. From the float valve the water can be drawn off through a second tube *æ*, unless it is desired to discharge the water into the vat. Such an arrangement however, is not really necessary, since the distance between the water levels referred to need not be maintained. In cases, where the vat is made very high and the water completely submerges the packing surfaces, the packings of course should be made so long as to pass around the whole periphery, or, preferably, should overlap at their ends. In that case other means than the opening *k* must be provided to create an overflow and thereby determine the level of the water in the annular chamber *g*.

The construction shown in Figs. 3 and 4 differs from the one above described in that the annular chamber is formed in this case by a flexible tube shaped packing *f'*. The packing tube which may be of leather or any other suitable material is secured by its flanges *l* and *m* to wires *l'* and *m'*, which are tightened. The flange *m* may also be arranged in a special groove *o* of the cylinder wall, as shown in Fig. 5. In this case, the tube *o* may be given such a shape that the flange *m*, as shown in Fig. 5, bears against the packing *e*. As will be seen from the drawing, the packing *e* is so arranged as not to touch the flanges *l* and *m*, a free space being left so that water from the annular chamber *g*, or the packing tube, can not pass behind the flanges *l* and *m* of the tube, or under the packing *e*. If this free space contains water of a higher pressure than that in the vat, the passage of water past the flanges of the packing tube is impossible. In order to prevent the displacement of the packing *e* to one side or another, narrow ledges *s* which are made a little longer than the width of the packing may be secured to the latter, as shown. If the arrangement illustrated in Fig. 5 is used, holes, as at *u*, should be provided so that water of a higher pressure can pass into the corner space.

What I claim is:

1. In a cylinder machine, the combination with the rotating cylinder having an annular flange on its side-walls and a vat containing the cylinder provided with a corresponding flange, of a flexible packing on the outside of said flanges and other packing means forming with the first packing an annular space adapted to hold water at a higher pressure than the water contained in the vat, and means to keep said annular space filled with water.

2. In a cylinder machine, the combination with the rotating cylinder having an annular flange on its side walls and a vat containing said cylinder and provided with a corresponding flange, of a flexible packing on the outside of said flanges and an additional packing forming with the said first packing an annular space adapted to hold water at a higher pressure than the water contained in the vat.

3. In a cylinder machine, the combination with the rotatable cylinder and a vat containing the same, of packing means provided between the side walls of the cylinder and the walls of the vat, said packing means forming an annular chamber adapted to hold water at a higher pressure than the pressure of the water contained in the vat, and means to permit water to flow from the lower part of said chamber and means to draw off said water.

In testimony that I claim the foregoing as my invention, I have signed my name in presence of two subscribing witnesses.

HALVOR GAARA.

Witnesses:
A. MÜLLER,
JOH. VAALER.