# United States Patent [19]

**Klayman et al.**

[11] **3,892,288**

[45] **July 1, 1975**


[54] **SPEAKER ENCLOSURE**


[75] Inventors: **Arnold I. Klayman; Leonard J. Genest,** both of Huntington Beach, Calif.

[73] Assignee: **Monitron Industries, Inc.,** Santa Ana, Calif.



[22] Filed: **June 18, 1973**

[21] Appl. No.: **370,717**

**Related U.S. Application Data**

[63] Continuation of Ser. No. 167,903, Oct. 2, 1971, abandoned.

[52] **U.S. Cl.** ..... **181/156**

[51] **Int. Cl.** ..... **G10k 13/00;** H04r 1/28

[58] **Field of Search** ..... 181/31 B, 31 R, 27 R, 156, 181/148



[56] **References Cited**

UNITED STATES PATENTS

| | | | |
|---|---|---|---|
| 2,871,971 | 2/1959 | Beecroft et al. | 181/31 B |
| 3,113,633 | 12/1963 | Eberhardt et al. | 181/31 B |

FOREIGN PATENTS OR APPLICATIONS

| | | | |
|---|---|---|---|
| 641,668 | 8/1950 | United Kingdom | 181/31 B |
| 1,201,682 | 7/1959 | France | 181/31 B |



*Primary Examiner*—Stephen J. Tomsky

*Attorney, Agent, or Firm*—Marvin Jabin



[57] **ABSTRACT**

A speaker enclosure which is particularly useful for stereophonic applications, but which also provides superior sound reproduction from monophonic sources. A reduction in size of the usual stereophonic speaker system is accomplished without sacrificing sound quality or stereo effect. Full bass reproduction is obtained from a small source, and the reflective properties of room surfaces, such as the walls and the ceiling, are taken advantage of, to enhance the sound dispersion capabilities of the system by reflective reinforcement.


**10 Claims, 5 Drawing Figures**

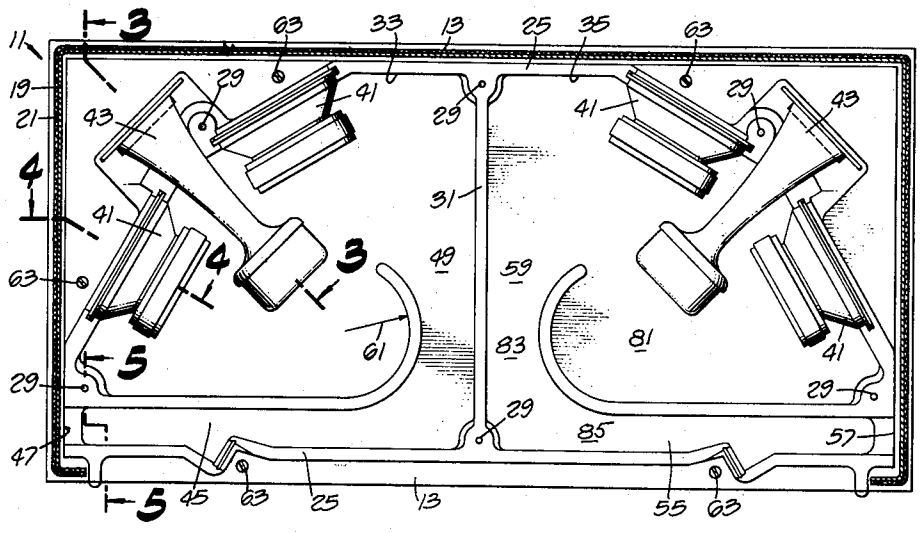

Fig. 1.




Fig. 5.




Fig. 2.




Fig. 3.




Fig. 4.

INVENTORS
ARNOLD I. KLAYMAN
LEONARD J. GENEST
BY
M. Jabin
ATTORNEY

# SPEAKER ENCLOSURE

This is a continuation of application Ser. No. 167,903, filed Oct. 2, 1971, now abandoned.

## BACKGROUND OF THE INVENTION

The dynamic or moving-coil loudspeaker developed in about the year 1925 has found widespread use both as a wide-range sound radiator and as a restricted range unit for the reproduction of either high or low frequencies. There have been no particular difficulties in utilizing the dynamic loudspeaker for the reproduction of the middle and high frequencies, for which the conversion of electrical sound energy into sound pressure in the air presents no serious problems.

At low frequencies, however, there is great difficulty in securing adequate coupling between the moving diaphragm and the air to develop sound pressures that are comparable to the efficiency of the speaker at higher frequencies. This is because of several factors, such as the compressibility of the air and the fact that low frequency energy values in music are quite large and, therefore, require greater movement of air than do higher frequencies.

Conventionally, devices such as bass-reflux enclosures and infinite baffles have been used to improve the ability of a given size cone loudspeaker to move large amounts of air and thereby develop the required sound pressure for the cone to be acceptable. These devices, however, are not without their own defects which prevent them from being realistic and natural in the quality of the sound they create. This is because enclosures of that kind are acoustically resonant, and, while they assist in increasing sound pressure, they accomplish this at essentially one frequency, which causes an unnatural and sometimes annoying sound. In addition, enclosures of this kind, to be efficient, must be quite large and do not lend themselves to use in conventionally-sized rooms in the average home. Small enclosure and speaker combinations have been developed recently, but they are low in efficiency and suffer more seriously from the resonant character of sound previously referred to.

Other devices such as ducted port and tunnel reflex enclosures have also been developed, but with results that are no more satisfactory than the results obtained with the other types of speaker enclosures.

## SUMMARY OF THE INVENTION

According to the preferred embodiment of the present invention, a speaker enclosure includes a pair of rigid symetrical chambers, each with a set of speakers and a bass duct which is open to the exterior at one end and which opens into the enclosure at the other end by means of a flared opening. The chambers are adjacent, but separated by a partition and together form a generally trapezoidal configuration, with the speakers being mounted on the non-parallel sides of the trapezoid, so as to be angularly displaced.

## BRIEF DESCRIPTION OF THE DRAWINGS

The features of the present invention which are believed to be novel are set forth with particularity in the appended claims. The present invention, both as to its organization and manner of operation, together with further objects and advantages thereof, may best be understood by reference to the following description,



taken in connection with the accompanying drawings, in which:

FIG. 1 is an isometric view of a speaker enclosure according to the present invention.

FIG. 2 is a sectional view taken along the line 2—2 of FIG. 1.

FIG. 3 is a sectional view taken along the line 3—3 of FIG. 2.

FIG. 4 is a sectional view taken along the line 4—4 of FIG. 2.

FIG. 5 is a sectional view taken along the line 5—5 of FIG. 2.

## DESCRIPTION OF THE PREFERRED EMBODIMENT

Turning now to the drawings, FIGS. 1–5 show rectangular speaker assembly 11 having front panel 13 separated from rear panel 15 by side and top panel 17. The front and rear panels 13 and 15 are made of wood, and the side and top panel 17 is a combination of an inner metal mesh 19 and an outer fabric material 21. The fabric 21 is of the decorative kind usually used with speakers.

The front acoustic frame 25 and the rear acoustic frame 27 are molded rigid plastic members which are attached to front panel 13 and rear panel 15, respectively, after the front acoustic frame 25 is securely fastened to the rear acoustic frame 27 by means of the rods or bolts 29 so as to form an integral unit. The partition 31 separates the unit into enclosures or chambers 33 and 35. As can be seen in FIG. 2, the chambers 33 and 35 together are generally trapezoidal, with each member having a pair of speakers 41 and a speaker or horn 43 mounted on the non-parallel sides of the trapezoidal configuration.

The acoustic frames 25 and 27 are made of a polyester resin material which has been combined with limestone as a filler. The use of a very rigid material for the acoustic frames 25 and 27 results in the efficiency of the system being significantly increased. Nearly all the acoustic energy produced by the speaker cones is utilized in producing sound, rather than being dissipated in vibrating a less rigid enclosure such as wood. This also reduces distortion and resonance effects from this source. The enclosures are lined with a spun glass insulating material such as Owens Corning Fibreglas, to break up internal reflections and to eliminate turbulence.

The speakers 41 are of the acoustic suspension variety, and have a very pliant suspension so that their mechanical resonance is some very low frequency, ranging from 80 Hz to subaudible. The speakers 41 are also designed to be capable of very large voice coil and cone excursions so that they will be capable of moving large quantities of air.

Bass duct 45 opens the exterior at one end through opening 47, and it opens into the chamber 33 by means of the flared opening 49 at its other end. Bass duct 55 opens to the exterior at one end through opening 57, and it opens into the chamber 35 by means of the flaired opening 59 at its other end.

It has been found that where speakers 41 are 4 inches in diameter, by way of example only, the optimum results are obtained when the chamber 33 has a volume of between 500 and 800 cubic inches, the bass duct 45 is from ¾ to 1½ inches wide, the flared opening 49 is from 2½ to 3½ inches wide at its widest part, and the

radius **61** is from 1¼ to 2 inches. The chamber **35** and the bass duct **55** have the same dimensions as the chamber **33** and the bass duct **45**, respectively.

To assemble the device, front acoustic frame **25** is fastened to front panel **13** by means of wood screws **63**, after the speakers **41** and **43** have been positioned within their retaining grooves **64** and **65**, respectively, and the front acoustic frame **25** and rear acoustic frame **27** have been fastened together by bolts **29**.

Rear panel **15** is then placed in position and countersunk bolts **66** are passed through holes drilled in the rear panel **15** and secured to acoustic frame **27** by means of U-shaped lock nuts such as lock nut **67**, after the metal mesh **19** and the fabric material **21** have been positioned within their retaining grooves **71** and **72**, as shown most clearly in FIGS. **3** and **4**. Wooden plugs can then be used to seal the holes in rear panel **15**, if desired.

Experiments using indicators placed at openings **57** and **59** and locations **81**, **83** and **85** have been conducted at the base frequencies of 100 to 35 Hz. The pressure wave amplitude at location **81** has been shown to be the lowest. This is to be expected, because of the comparatively large area involved. The pressure wave amplitude begins to increase at flared opening **59**, and becomes a maximum at location **83**, because of the reduction in area and resulting Venturi effect. The pressure wave amplitude remains constant at location **85** and opening **57**, because the bass duct area is not greater than the throat area at location **83**.

Since the length of the bass duct is held to considerably less than ¼ wavelength at the frequencies involved, namely **35** to 100 Hz, there are no resonance effects in this frequency range because of the bass duct itself. At 100 Hz, ¼ wavelength equals 2.71 feet, while at 35 Hz, ¼ wavelength equals 7.8 feet. At opening **47**, the pressure wave is coupled to the air through a slot. This is very similar to the *f* hole coupling used in bass violins and other string instruments.

While particular embodiments of the present invention have been shown and described, it will be obvious to those skilled in the art that changes and modifications may be made without departing from this invention in its broader aspects, and that the intention is to cover all such changes and modifications as fall within the true spirit and scope of this invention.

We claim:

**1.** Speaker apparatus comprising:

a. an enclosure adapted to have at least one speaker mounted on a surface thereof; and

b. duct means having a first terminus which is open and a second terminus having a smoothly flared opening into said enclosure, said first terminus being spaced and directed away from the front of the speaker to be mounted on said surface so as to prevent sound from said speaker from being propagated through said first terminus into said duct means, and the boundary of said flared opening having a non-linear curvature which produces a Venturi effect between the volume of air in said enclosure and the volume of air in said duct means.

**2.** Speaker apparatus as defined in claim **1** including a second enclosure adapted to have at least one speaker mounted on a surface thereof, and a second duct means having a first terminus which is open and a second terminus having a smoothly flared curved opening into said second enclosure, said enclosures being adjacent each other, and the boundary of said flared opening of said second duct means having a radius of curvature which produces a Venturi effect between the volume of air in said second enclosure and the volume of air in said second duct means.

**3.** Speaker apparatus as defined in claim **2** in which said enclosures are symmetrical.

**4.** Speaker apparatus as defined in claim **3** in which said enclosures are planar and separated by a partition.

**5.** Speaker apparatus as defined in claim **4** in which each of said enclosures has a plurality of speakers mounted on a surface thereof.

**6.** Speaker apparatus as defined in claim **5** in which the speakers of each of said enclosures are angularly positioned in a direction away from the speakers of the other of said enclosures.

**7.** Speaker apparatus as defined in claim **6** in which said first terminus is substantially perpendicular to said second terminus.

**8.** Speaker apparatus as defined in claim **7** including, in addition, rigid front and rear acoustic frame means for supporting said speakers therebetween.

**9.** Speaker apparatus as defined in claim **8** including, in addition, front and rear panel means, and side and top means positioned between said front and rear panel means; and in which said apparatus is generally rectangular in configuration, the rear of each of said speakers is positioned within one of said enclosures and the front of each of said speakers is directed away from its respective enclosure but is enclosed by said front and rear panel means and said top and side means, said top and side means being pervious to sound and said front and rear panel means being relatively poor conductors of sound.

**10.** Speaker apparatus as defined in claim **9** in which each of said flaired openings is from 2½ to 3½ inches wide, each of said ducts is generally from ¾ to 1½ inches wide, each of said enclosures is 500 to 800 cubic inches in volume, and said front and rear acoustic frame means are made of a polyester resin material combined with limestone as a filler.

* * * * *