Jan. 17, 1967 W. M. ZINGG 3,298,669

EDUCTOR MIXING APPARATUS

Filed Sept. 23, 1964

Fig. 2

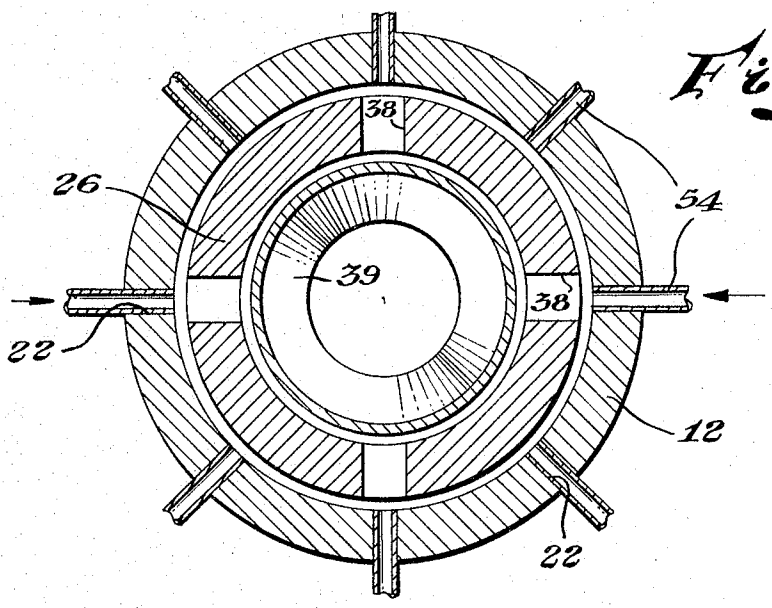

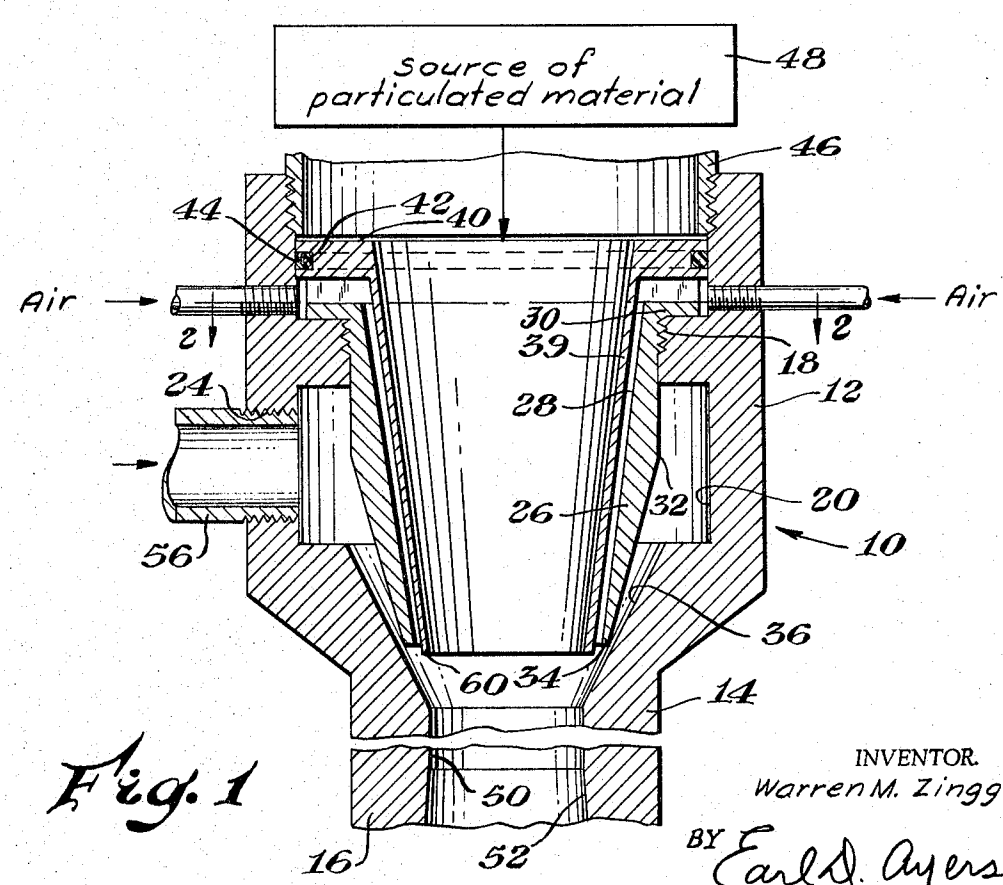

Fig. 1

INVENTOR.
Warren M. Zingg
BY Earl D. Ayers
AGENT

United States Patent Office 3,298,669 Patented Jan. 17, 1967

3,298,669

EDUCTOR MIXING APPARATUS

Warren M. Zingg, Tulsa, Okla., assignor to The Dow Chemical Company, Midland, Mich., a corporation of Delaware

Filed Sept. 23, 1964, Ser. No. 398,601
5 Claims. (Cl. 259—4)

This invention relates to eductor apparatus and particularly to an eductor assembly which is useful in mixing liquids and solids which tend to agglomerate on some parts of the mixing apparatus on contact therewith.

The mixing of certain finely particulated materials, such as, guar gum, bentonite clay, methocel, and the water soluble polyacrylamides, for example, in eductor type mixing devices has been hampered in the past by bridging of the wetted particulated material along the materials inlet part of the eductor. Usually the cause of such bridging has been the wetting of the downstream end part of the draft tube of the eductor apparatus through which the particulated material is introduced.

Accordingly, a principal object of this invention is to provide improved eductor apparatus which is more trouble-free in operation than has heretofore been true.

Another object of this invention is to provide an improved eductor apparatus which is trouble-free in operation and easy to assemble and disassemble.

In accordance with this invention, there is provided eductor apparatus comprising a pair of frusto-conical members, each having an outwardly extending flange at its base end, one telescoped within the other, and an outer chamber having an input part, Venturi section, and an output part. The two flanged frusto-conical members are disposed within the input part with their smaller ends adjacent to the Venturi section. The dimensions of the frusto-conical members are such that space exists between the telescoped side walls of the members. Means are provided for introducing particulated material through the hollow interior of the inner frusto-conical members, air or other gas or mixture thereof through the space between the frusto-conical walls, and water or other liquid in the space between the side wall of the outer frusto-conical member and the inner wall of the input part.

The air provides a protective curtain which prevents premature mixing of the particulated material and the liquid.

The invention, as well as additional objects and advantages thereof, will best be understood when the following detailed description is read in connection with the accompanying drawing, in which:

FIGURE 1 is a side elevational view, in section, of apparatus in accordance with this invention, and

FIGURE 2 is a sectional view taken along the line 2—2 of FIGURE 1.

Referring to the drawings, there is shown eductor apparatus, indicated generally by the numeral 10, which comprises a generally cup-shaped input part 12, a venturi part 14, and an output or diffusing part 16 which is disposed on the side of the Venturi part 14 which is opposite the input part 12.

The input part 12 has a threaded shoulder 18 extending inwardly from the side wall 20 thereof.

An array of bores 22 extends through the wall of the input part 12 above the side of the shoulder 18 which is remote from the Venturi section 14.

A larger diameter bore 24 extends through the wall of the input part 12 between the shoulder 18 and the Venturi part 14.

A flanged member 26 having frusto-conical inner side walls 28, an outwardly extending flange 30 at its base

end, and an outer side wall 32 which is generally cylindrical in configuration from its base end to about half of the altitude of the side walls, then is tapered thinner as it approaches the smaller diameter end 34 of the member 26 is fitted into the input part 12 with its flange 30 seating against the shoulder 18 and with its side wall threadedly engaging the shoulder 18. The end 34 of the flanged member 26 extends into the flared end 36 of the Venturi part 14. The flange 30 has an array of four bores 38 (or slots) extending horizontally therethrough, e.g., parallel to the base of the member 26.

A second frusto-conically shaped member 39 having an outwardly extending flange 40 at its base end is also disposed within the input part 12 with the flange 40 resting on the flange 30 of the member 26. The flange 40 has a peripheral groove 42 therein which extends around the circumference of the flange. An o-ring seal 44, disposed in the groove 42, prevents flow of fluid from the bores 22 into the space above the flange 40.

The configuration of the walls of the frusto-conically shaped member 39 is such that the outer wall surface of the frusto-conical part is substantially parallel to, but spaced from, the inner side wall 28 of the member 26. The space between the walls of the member 39 and the side wall 28 is, as shown, substantially the same along the length of the walls of each member 26 or 39, and is about 1/16 inch. The wall of the member 39 extends slightly below the end 34 of the member 26.

The member 39 is held in place against the flange 30 of the member 26 by means of the conduit 46 which is coupled to a suitable source 48 of particulated material.

The Venturi part 14 comprises the usual input throat 36, a throat part 50 of reduced diameter, and the flared diffuser or mixer part 52.

In operation air or other suitable gas or mixture thereof is introduced under pressure to the bores 22 through the conduits 54 from a suitable source (not shown). Water or other liquid or pumpable mixture is introduced under pressure to the input part 12 through the bore 24 by means of the conduit 56.

While the liquid (or pumpable mixture) is introduced to the apparatus, air or gas entering the bores 22 circulates in the space between the walls of the members 26 and 39, flowing as a complete curtain or shield of gas from the downwardly extending or output ends of the said members.

The air shield is under sufficient pressure that droplets of water which may tend to splatter towards the output end of the member 39 through which particulated material from the source 48 is dispensed are deflected downwardly by the gas shield or curtain and are unable to reach any part of the member 39.

Thus, the water or other liquid entering the input end 12 of the apparatus of this invention is physically separated from the particulated material with which it is to be mixed until both are in the Venturi part 14 of the apparatus. The flow velocity through the Venturi part is sufficient to prevent any back splattering from reaching the adjacent end of the member 39.

Particulated material is also prevented by the air shield or curtain from being prematurely drawn towards the liquid with which it is to be mixed.

The gases entering the bores 22 may be supplied from a pressure source, or, under some conditions of operation, by aspiration.

The present invention, by preventing the wetting of the adjacent end 60 of the member 39, overcomes a serious problem in treating earth wells with such mixtures, because in such applications continuous operation of the mixing equipment is usually of prime importance. In the past, bridging of the input draft tube for particu-

lated materials (member 39) has resulted in either a non-uniform mixture being pumped down the well, or has completely shut off the flow of particulated materials to the mixing part (Venturi).

What is claimed is:

1. Apparatus for mixing liquid and particulated material, comprising:

(A) a cup-shaped input part having an input end, an output end and side walls, a shoulder extending inwardly from said side walls intermediate of said ends, said output end having a bore therein,

(B) a Venturi mixing section having flared input and output and a constricted throat part, said Venturi mixing section having its input coupled to the output end of said input part,

(C) first and second frusto-conically shaped hollow elements, each of said frusto-conically shaped elements having side walls and an outwardly extending flange coupled to its base end, said second frusto-conically shaped element being telescoped within said first frusto-conically shaped element said frusto-conically shaped elements being disposed within said cup-shaped input part and extending into the flared input of said venturi mixing section, the flange of said first frusto-conically shaped element contacting said shoulder and the flange of said second frusto-conically shaped element contacting said flange of said first frusto-conically shaped element, the configuration of said side walls of the frusto-conically shaped elements being such that, when telescoped within one another, space exists between them along the entire length of the telescoped parts, said second frusto-conically shaped element extending further into said flared input than does the first frusto-conically shaped element,

(D) means for injecting liquid based pumpable material into said input part adjacent to said flared input of said Venturi mixing section, said first frusto-conically shaped element being spaced from said flared input part and said means for injecting liquid based pumpable material,

(E) means for injecting a gas between the side walls of said first and second frusto-conically shaped elements, and

(F) means for introducing particulated material through the hollow interior of said second frusto-conically shaped element.

2. Apparatus in accordance with claim 1, wherein said means for injecting liquid based pumpable material is a bore through the side wall of said input part between said shoulder and said output end.

3. Apparatus in accordance with claim 1, wherein said means for injecting liquid based pumpable material into said input part is a bore extending through the side wall of said input part and said means for injecting gas comprises an array of flow paths extending transversely through the flange of said first frusto-conically shaped element.

4. Apparatus in accordance with claim 1, wherein a seal is provided between the flange of said second frusto-conically shaped element and the side wall of said input part.

5. Apparatus in accordance with claim 1, wherein the space between the side walls of said frusto-conically shaped elements is substantially uniform along the telescoped length of said element.

References Cited by the Examiner

UNITED STATES PATENTS

2,959,561	11/1960	Kelley	259—4X
3,207,485	9/1965	Warren	259—4

WALTER A. SCHEEL, *Primary Examiner.*

JOHN M. BELL, *Assistant Examiner.*