July 17, 1934. E. A. SCHACHINGER 1,967,042

CHANGEABLE KEY LOCK

Filed March 6, 1933 2 Sheets-Sheet 1

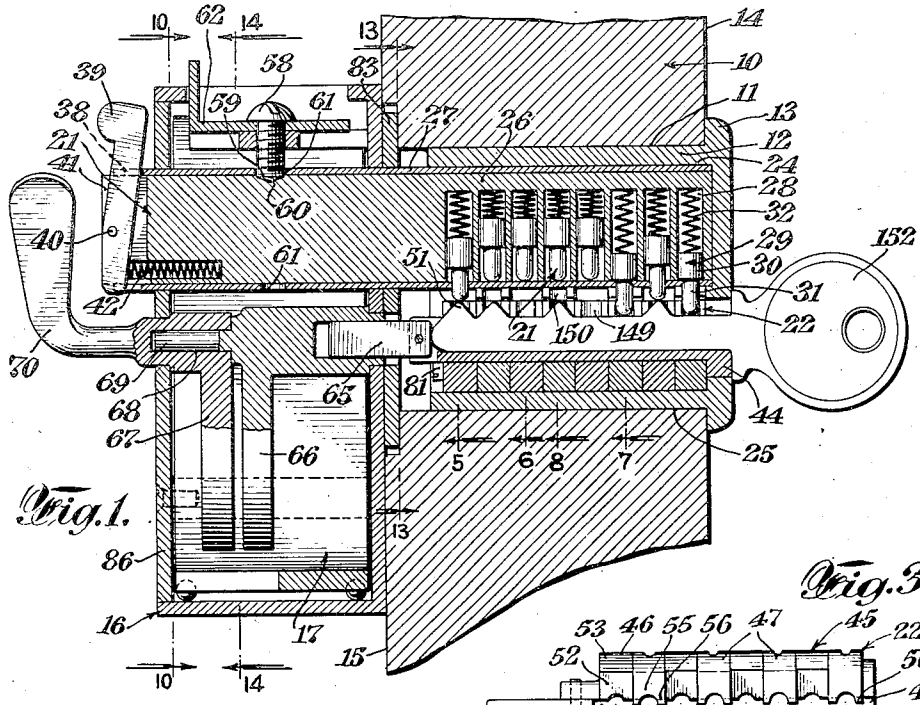

Fig. 1.

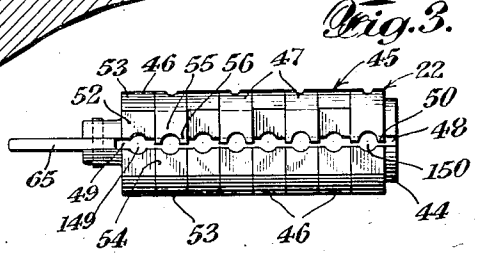

Fig. 3.

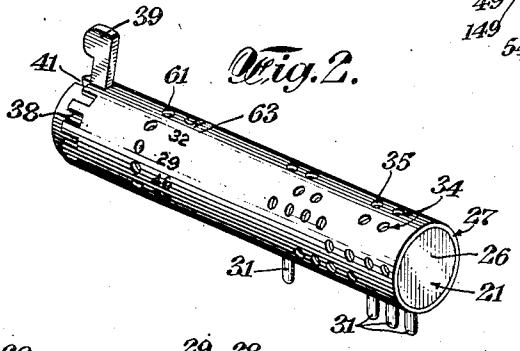

Fig. 2.

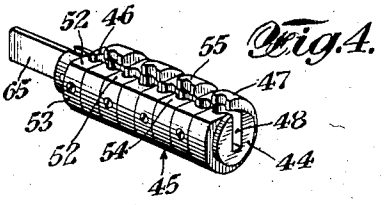

Fig. 4.

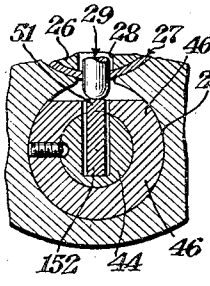

Fig. 5.

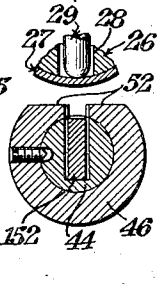

Fig. 6.

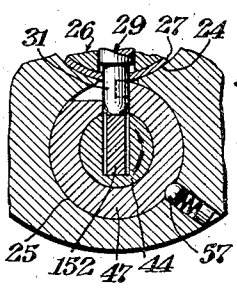

Fig. 7.

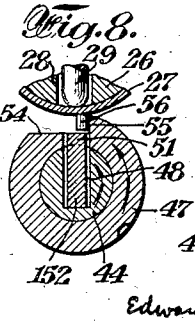

Fig. 8.

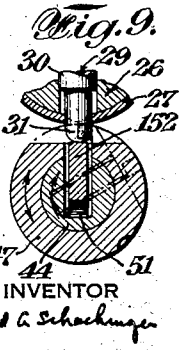

Fig. 9.

INVENTOR
Edward A. Schachinger
BY Hoguet & Neary
his ATTORNEYS

July 17, 1934. E. A. SCHACHINGER 1,967,042

CHANGEABLE KEY LOCK

Filed March 6, 1933 2 Sheets-Sheet 2

Fig. 10.

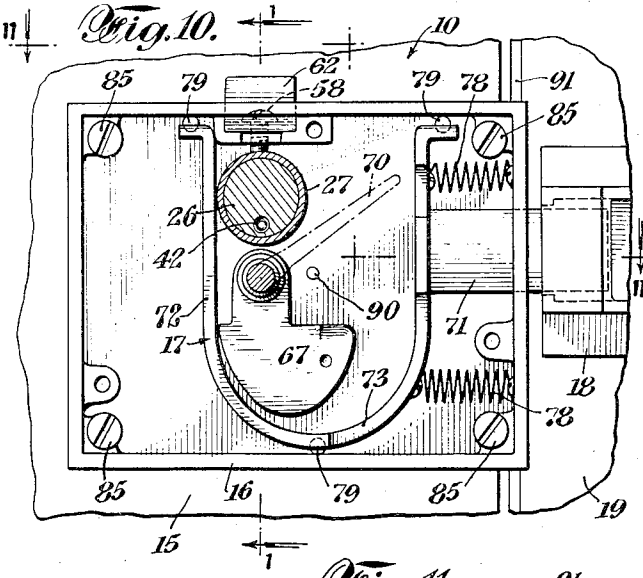

Fig. 13.

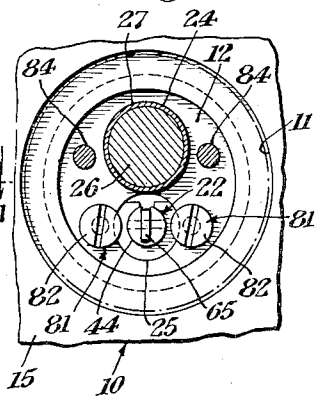

Fig. 11.

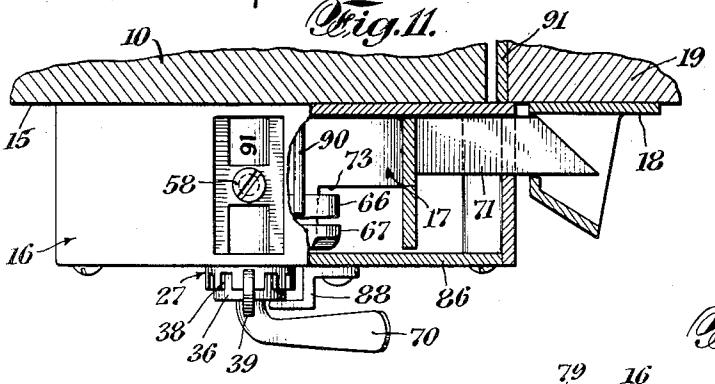

Fig. 14.

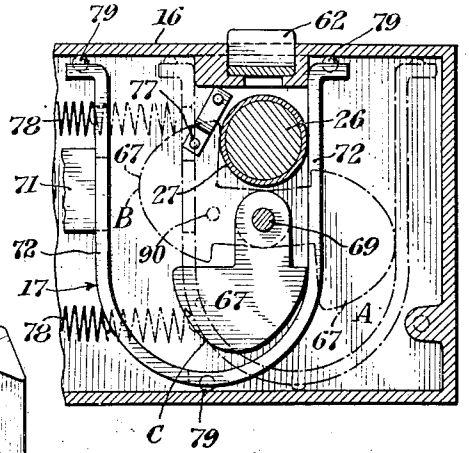

Fig. 12.

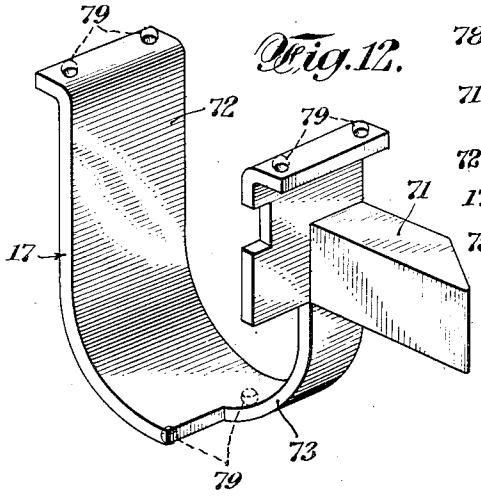

INVENTOR
Edward A. Schachinger
BY Hoyne & Meany
his ATTORNEYS

Patented July 17, 1934 1,967,042

UNITED STATES PATENT OFFICE

1,967,042

CHANGEABLE KEY LOCK

Edward A. Schachinger, New York, N. Y.

Application March 6, 1933, Serial No. 659,755

16 Claims. (Cl. 70—93)

This invention pertains generally to locks and pertains particularly to locks of the changeable key type. The invention pertains more particularly to a lock in which provision is made for changing the combination of operative pin tumblers, each combination requiring the use of a specific key, and in which combinations of pin tumblers are grouped with combinations of other changeable associated parts to greatly multiply the number of possible key shapes.

The invention also pertains to a lock which provides for the use of master keys.

More specifically this invention pertains to a changeable key lock of the cylinder type in which the pin tumblers are employed in various combinations of less than the whole rather than as a whole, to effect a large number of permutations, each permutation permitting operation of the lock to be restricted to a single key except for the master key; in which a plurality of permutations of pin tumblers may be obtained in a single lock, thus permitting the key for the lock to be changed at will; in which the key plug has a specific tumbler ring for each pin tumbler, said tumbler rings being of two types, one type requiring the use of a key bit to raise the tumbler to permit turning of the key plug, the other requiring the absence of a key bit to permit such turning; in which said tumbler rings are interchangeable to effect a larger number of permutations; in which each of the ring permutations is adapted to cooperate with all possible permutations of pin tumblers; and in which each ring permutation has a single master key which will operate the lock regardless of the pin tumbler combination employed with said ring combination. Thus each ring permutation will require a different master key, and each pin permutation used with any ring permutation may restrict the operation of the lock to the use of a specific change key, said change key however being inoperative when the same pin permutation is used with a different ring permutation.

From the foregoing it will be seen that a series of locks may be made in which a single ring permutation is used, to permit said series to be operated by a single master key. To each lock may be assigned a group of pin permutations, for instance, ten. The permutations of each group may be different from those of the others. As a result each lock may have a group of change keys, each of which is different not only from those of the same group but also from those of the other groups.

The pin permutations of each lock may be incorporated into a magazine which by adjustment will afford any desired permutation of the group. The magazines for any series of locks may be made interchangeable, if desired, thus making it possible to transfer the groups of change keys from one lock to another.

The invention pertains further to the construction, arrangement and combination of parts, which together with other features, will become apparent to persons skilled in the art as the specification proceeds and upon reference to the drawings in which:

Figure 1 is a sectional elevation of the lock taken substantially on line 1—1 of Figure 10.

Figure 2 is a perspective view of the pin tumbler magazine.

Figure 3 is an elevation of the cylindrical plug mechanism.

Figure 4 is a perspective view of the cylindrical plug mechanism.

Figure 5 is a section shown broken on line 5—5 of Figure 1.

Figure 6 is a section shown broken on line 6—6 of Figure 1.

Figure 7 is a section shown broken on line 7—7 of Figure 1.

Figure 8 is a section shown broken on line 8—8 of Figure 1.

Figure 9 is a section shown broken, illustrating mechanism for depressing the pin tumblers for purposes of changing the pin tumbler combination.

Figure 10 is a section on line 10—10 of Figure 1.

Figure 11 is a view partly in section taken on line 11—11 of Figure 10.

Figure 12 is a perspective view of the bolt mechanism.

Figure 13 is a view partly in section on line 13—13 of Figure 1.

Figure 14 is a section on line 14—14 of Figure 1.

Referring now more particularly to the drawings, in which a particular embodiment of the invention is shown for the purposes of illustration, at 10 is shown a broken section of a door having the customary aperture 11 for housing the barrel 12 of a cylinder lock. The barrel 12 is provided with the usual flange 13 which abuts the outer face 14 of door 10 in the usual manner.

Attached to the inner face 15 of door 10 is the conventional bolt casing 16. The bolt mechanism 17 (see Figure 12) may be of any desired or conventional construction. The bolt is adapt-

ed to cooperate with the conventional member 18 secured to the door jamb 19.

The more important features of this invention relate to the pin tumbler magazine 21 and the key plug mechanism 22.

Barrel 12 is provided with two longitudinally arranged sockets 24 and 25 of cylindrical contour. Said sockets are disposed one above the other with a part of their common wall removed, as clearly seen in Figures 5 and 7, for purposes which will hereinafter appear.

Pin tumbler magazine 21 fits in socket 24 and key plug mechanism 22 fits in socket 25 as clearly illustrated in Figure 1.

The pin tumbler magazine comprises a core 26 and a shell 27. Core 26 is provided with a row of sockets 28 for housing the pin tumblers 29, each socket 28 housing one pin tumbler 29.

Each tumbler 29 is provided with a shoulder 30 and an attenuated tip 31 and is urged outwardly from its socket 28 by means of a spring 32 in said socket.

Shell 27 which closely contacts core 26 is provided with a plurality of longitudinal rows 34 of apertures 35. Each aperture 35 is circumferentially in line with a pin tumbler tip 31. The lock, as illustrated, has eight pin tumblers. There are, therefore, eight circumferential lines upon which apertures 35 may fall. In other words, there are eight aperture positions along any longitudinal line of shell 27, any combination of which may be employed to form a single row 34. The number of rows 34 is limited only by the circumference of the shell 27 and the size of the apertures 35 as will be evident.

It is, of course, obvious that any desired number of pin tumblers may be employed, eight pin tumblers being shown and described for the purpose of illustration.

As will be seen upon reference to Figure 1, apertures 35 permit the tips 31 of pin tumblers 29 to project from the shell 27. Each row 34 of apertures 35 permits a different combination or permutation of tips 31 to project through shell 27.

A large number of different pin tumbler combinations or permutations is thus made possible, each combination requiring a different change key for operation of the lock as will hereinafter appear.

To change the combination of projecting pin tumbler tips 31 it is merely necessary to depress the projecting tips 31 as far as the surface of the shell 27 and then to turn the shell 27 and the core 26 relative to each other. Since the tips 31 are rounded they will be forced inwardly into their sockets 28. A different combination of projecting tips 31 may be obtained by stopping the relative rotation of the shell 27 and the core 26 when any selected row 34 of apertures 35 is opposite the row 28 of sockets.

For ease in selection, the shell 27 may be conveniently provided with a circumferential row of notches 38 which receive a detent 39 shown pivoted at 40 in a slot 41 in the end of the core 26. The detent 39 may be held in a selected notch 38 by means of a spring 42.

The key plug mechanism 22 comprises a cylindrical core 44 upon which is mounted a plurality of tumbler rings 45. As shown, alternate rings 46 are secured to the core 44. The remaining rings 47 are rotatable on the core 44. The core 44 is provided with the usual key way 48. The rings 46 and 47 are provided with slots 49 and 50 respectively, which, when in the positions shown in Figures 3 and 4 line up with the key way 48. The result is that bits 51 on the key illustrated at 152 may project beyond the key way 48 and into the slots 49 and 50 and may pass through the slots 49 and 50 upon insertion and removal of the key 152. A spring pressed detent 57 is preferably provided for each ring 47 to hold it in aligned position except when moved by the key 152.

The slots 49 and 50 are shown provided with enlarged portions 149 and 150 which comprises pinways, although the slots themselves may act as pinways if desired.

As will be clearly seen in Figures 3, 4, 5 and 6 each ring 46 is cut away on both sides of its slot 49 to form flat faces 52 which merge with its periphery 53. The bit 51 depresses a pin tumbler tip 31 sufficiently to permit said pin tumbler tip to ride up on to either face 52 on opposite sides of the slot 49 upon turning of the core 44 in either direction by means of the key 152. Since the pin tumbler tip 31 may be moved on to either face 52 it may also ride up onto the portion 53 of larger diameter and of circular contour. The diameter of the portion 53 is sufficient to depress the pin tumbler tip 31 back to the surface of the shell 27 for purposes which will hereinafter appear.

Each ring 47, on the other hand, is cut away on one side only of its slot 50 to form a flat face 54 which also merges with the ring periphery 53. The other side 55 is left intact and is provided with a portion 56 which projects over the slot 50 and the key way 48, as clearly seen in Figure 8. The bits 51 on the key 152 are merely high enough to depress the pin tumbler tips 31 to bring the same flush with the faces 52 and 54 as the case may be. Since any bit 51 which enters a slot 50 locks the respective ring 47 to the core 44 (as is clearly seen in Figure 8) should a pin tumbler tip 31 project into any slot 50 and should a bit 51 also enter said slot 50 the core 44 would be locked against counter movement.

As will be seen hereinafter, a counter clockwise movement of the core 44 as seen in Figure 8 is necessary to move the bolt mechanism 17 to unlocked position.

From the foregoing, it will be seen that should any pin tumbler tip 31 project into a slot 50 to lock the respective ring 47 against counter clockwise movement it is necessary to avoid locking the respective ring 47 to the core 44, since otherwise counter clockwise movement of core 44 would be prevented by the pin tumbler tip 31. A proper height of the key body to avoid locking the core 44 to the respective ring 47 and to permit the counter clockwise movement of core 44 is illustrated in Figure 7.

It will, therefore, be seen that for any rings 46 and 47 which are not engaged by pin tumbler tips 31 no special provision need be made on key 152. However, for the purpose of complicating the appearance of the key and in the case of rings 47 to prevent the specific change key from operating other combinations of pin tumblers, bits 51 may be provided for such rings 46 and 47 without interfering with the operation of the lock.

In all cases where a pin tumbler tip 31 projects into a slot 49 of a ring 46, since the latter is secured to the core 44, it is necessary to provide a bit 51 on the key 152, the operation of which in this instance is clearly illustrated in Figure 5.

In case any pin tumbler tips 31 project into slots 50 of rings 47 it is necessary to avoid locking the respective rings 47 to the core 44. This is done by confining the key body to the key way 48 at such points as clearly illustrated in Figure 7.

The portions 56, which overhang slots 50 and which partially surround the pin tumbler tips 31, prevent the use of high bits 51, and thus insure engagement of the pin tumblers by the portions 55 when the core is moved in a counter clockwise direction in operating the lock. The portions 56 also prevent the use of a tool or other means for picking the lock.

Since it is preferred to leave the pin tumbler magazine in position when changing the combination of pin tumbler tips 31 from one change key to another the pin tumbler tips may be depressed to the surface of the shell 27 to permit relative rotation between the core 26 and shell 27 by inserting any key upside down, as illustrated in Figure 9. This will depress all projecting pin tumbler tips 31 sufficiently to permit them to ride up onto the faces 52 and 54 upon a clockwise movement of the key. The pin tumbler tips 31 will be depressed to the surface of the shell 27 in this clockwise movement by the peripheries 53 of rings 46 and 47. The detent 39 may then be moved to the left as seen in Figure 1 to disengage it from its particular notch 38 and upon loosening the screw 58 sufficiently to bring its tip 59 out of the depression 60 in core 26 but leaving the tip 59 in aperture 61 of the shell 27 to hold the shell stationary, the core 26 may be rotated in either direction by means of the detent 39. The detent may be inserted into any desired notch 38 for a new combination of pin tumbler tips. Then upon complete removal of the screw 58 (and cap 62) the detent 39 may be turned to an upright position to correctly position the row of sockets 28 in the core 26 with respect to the key plug mechanism 22. Since the cap 62 was removed with the screw 58 the number of the new key required to operate the lock may be seen in uppermost position in the circumferential row of numbers shown at 63. The cap 62 and the screw 58 are then replaced, the tip 59 of the screw 58 entering a new aperture 61 and the same depression 60 to secure the pin tumbler magazine in position.

Since the depression 60 and apertures 61 complicate the construction, it may be preferred to dispense with same and secure shell 27 and core 26 together by screwing down on screw 58. In this case a slight release of screw 58 would permit the core 26 to be turned but would still hold shell 27 against turning.

A stop 90 in the path of cam 66 may be provided to limit the clockwise movement of the key plug mechanism 22 so that pin tumbler tips 31 will not enter the sockets in rings 47 for detents 57, thus interfering with movement of core 26 inside of shell 27.

The terms clockwise and counter clockwise have been used for convenience in illustration. It is, of course, obvious that the parts may be reversed in shape or otherwise changed so that the directions of turning movements would be reversed.

Any desired bolt mechanism may be operated by the turning of the core 44. The core 44 is shown connected by a tongue 65 to a cam 66.

A second cam 67 is shown pivoted at 68 on an extension 69 on the body of cam 66. Cam 67 is operated by means of a lever 70.

The bolt mechanism 17 is of a standard type and is shown as comprising a bolt 71 integral with a U-shaped member 72. Both cams 66 and 67 are adapted to slide the bolt mechanism 17 to the left, as seen in Figure 10, upon a clockwise movement as is seen in this figure, of either cam 66 or 67, the cam 66 being operated by the key 152 and the cam 67 being operated by the lever 70. The U-shaped member 72 has a cut-out portion 73 which permits selective operation of the cams 66 and 67. In other words, the bolt mechanism 17 can be moved to the left, as seen in Figure 10, by either cam 66 or 67 without interference from the other cam.

As illustrated in Figure 14, cam 67 may be moved to the dotted line position indicated at A to hold the bolt 71 in retrieved position and free from the member 18. Cam 67 when moved to the dotted line position indicated at B is adapted to hold the bolt 71 in extended position, that is in engagement with the member 18. Cam 67 when in the position indicated at B will prevent retrievement of the bolt 71 by means of the key 152. A detent 77 may be provided to releasably hold the cam 67 in the position B. The normal position of the cam 67 is that shown in full lines at C.

The bolt mechanism 17 is continuously urged to the right in Figure 10 by means of springs 78. Frictionless bearings indicated generally at 79 may be provided on the U-shaped member 72 to afford easy movement thereof.

As indicated in Figure 13, the key plug mechanism 22 is held in the barrel 12 by means of screws 81, the heads 82 of which overlap the end of the mechanism 22 but do not interfere with free rotation thereof.

The barrel 12 and its associated mechanism may be held in the aperture 11 by means of plate 83 which is fastened to the barrel 12 by means of screws 84.

The bolt casing 16 may be fastened to the door in any conventional manner, such as by the screws 85, and may be provided with a removable plate 86 for purposes of assembly.

It is, of course, understood that the casing 16 may be formed in a single piece, for instance, by pressing from sheet metal or any other suitable construction may be provided.

From the foregoing it will be seen that the lock may be operated with a different key for each of the rows 34 of apertures 35 and that it is possible to prevent operation of the lock by any key of the group except the correct one. The master key, when the rings 46 and 47 are arranged as described, would be provided with a bit 51 for each of the rings 46 and the body of the key would not project into any of the slots 50 of the rings 47.

Inasmuch as the rings 46 and 47 may be arranged on the core 44 in a very large number of different ways, a very large number of ring permutations is possible, each ring permutation having a specific master key, and a large number of groups of pin permutations adapted to cooperate therewith. Each group of pin permutations may be incorporated into a magazine which may be made interchangeable with the other magazines. The entire pin tumbler magazine may be withdrawn bodily from the lock by removal of the stop 88 secured to the face of casing 16, then inserting a key upside down, depressing the pin tumblers by a clockwise movement of the key, partially removing screw 58, releasing detent 39, turning the core 26 slightly and stopping detent 39 between two notches 38. No row of apertures 34 will then be in line with the row 28 of sockets in core 26 and the pin tumblers will remain within shell 27. Upon complete removal of screw 58 the magazine may be withdrawn.

It will, of course, be obvious that in all permu-

tations of ring tumblers in which two fixed rings are arranged next to each other that these rings may be made integral. Other variations in ring structure and arrangement as well as in other parts of the lock will suggest themselves to persons skilled in the art upon becoming familiar with this invention.

The parts of the lock to which access may be obtained by filing or cutting instruments may, of course, be made of hardened metals or alloys of metals.

While the fixed ring tumblers have been described as having a flat face on each side of the slot and the relatively movable ring tumblers have been described as having a flat face on one side of the slot, it is to be understood that other constructions are possible for performing the same functions or for performing a selected portion of said functions. For instance, if rotation of the ring tumblers is not to be resorted to for the purpose of depressing the pin tumblers into the magazine the fixed ring tumblers may be provided with a flat face on one side only and the relatively rotatable pin tumblers need not have a flat face.

The magazine may be adapted for use with key plugs of other types.

The key plug which, broadly speaking, comprises a core having tumbler rings, certain of which are fixed and certain of which are relatively movable may also be adapted for use with other pin tumbler arrangements.

Any of the means known in the art for varying key shapes may be employed in addition to those disclosed herewith, for instance, variations in the cross sectional contour of the keys.

While the invention has been described in connection with a use in which selected combinations of less than the whole number of pin tumblers are employed, it is to be understood that all of the pin tumblers may be employed, in which case the lock would be operated by the master key only.

Many other changes, omissions, additions, variations and modifications may be made.

It will be noted that a plate 91 which is separate from member 18 is provided and that the casing 16 overlaps the door jamb 19, thereby making it impossible to loosen the member 18 or retrieve the bolt 71 by means of a burglar's jimmy.

It is also obvious that the invention may be applied to any type of lock regardless of its use, shape or other construction.

I claim:

1. A lock of the changeable key type comprising a key plug and a pin tumbler magazine adapted to cooperate therewith, said key plug comprising a core having a keyway and a plurality of tumbler rings, said tumbler rings mounted on said core, slots in said rings forming an extension of said keyway, pinways in said slots, certain of said rings being fixed to said core, the remainder of said rings being rotatable on said core, said pin tumbler magazine having a pin tumbler corresponding to each of said pinways, and means on said pin tumbler magazine for controlling the number of operative pin tumblers.

2. A lock of the changeable key type comprising a rotatable key plug and a plurality of pin tumblers adapted to cooperate therewith, said key plug comprising a core having a keyway and a plurality of tumbler rings, said tumbler rings mounted on said core, slots in said rings forming a lateral extension of said keyway, pinways in said slots, certain of said rings being fixed to said core, the remainder of said rings being rotatable on said core, each pin tumbler adapted to cooperate with one of said pinways, and means for selectively maintaining certain of said pin tumblers inoperative.

3. A pin tumbler magazine comprising a core, a row of pin tumblers supported in said core, a shell about said core, means for resiliently urging said pin tumblers outwardly against said shell, a plurality of rows of apertures in said shell, said rows of apertures spaced circumferentially of said shell, said shell and core adapted for relative rotation to bring said rows of apertures selectively in line with said row of pin tumblers, the apertures of each row being selectively positioned to permit projection therethrough of a predetermined combination of pin tumblers.

4. A pin tumbler magazine comprising a core, a plurality of pin tumblers supported by said core, a shell about said core, means for resiliently urging said pin tumblers outwardly against said shell, a plurality of rows of apertures in said shell, said shell and core adapted for relative rotation to bring said rows of apertures selectively in line with said row of pin tumblers, the apertures of each row being selectively positioned to permit projection therethrough of a predetermined combination of pin tumblers.

5. A key plug comprising a core, a keyway in said core, a plurality of tumbler rings, slots in said rings, certain of said rings being fixed on said core with each slot in line with said keyway, the remainder of said rings being rotatable on said core with each slot adapted to be brought in line with said keyway, said slots when in line with said keyway forming a lateral extension of said keyway, pinways in said slots, said fixed rings having portions cut away on opposite sides of said slots, and said movable rings having portions cut away on one side of said slots only.

6. A key plug comprising a core, a keyway in said core, a plurality of tumbler rings on said core, slots in said rings, certain of said rings being fixed to said core with each slot in line with said keyway, the remainder of said rings being rotatable on said core with each slot adapted to be brought in line with said keyway, said slots when in line with said keyway forming an extension of said keyway, pinways in said slots, the slots in said fixed rings being open to the periphery of said rings to permit the disengagement of pin tumblers from said rings by key bits, said slots in said movable rings being at least partially restricted to prevent disengagement of pin tumblers by key bits.

7. A key plug comprising a core and a plurality of tumbler rings, said tumbler rings mounted on said core, certain of said tumbler rings being fixed to said core and the remainder of said tumbler rings being relatively rotatable on said core, a keyway in said core, slots in said rings, said slots adapted to receive key bits when said slots are arranged in line with said keyway to form a lateral extension thereof.

8. A lock of the changeable key type comprising a key plug and a pin tumbler magazine associated therewith, said key plug having a keyway and means defining pinways communicating with said keyway, said pin tumbler magazine having a pin tumbler corresponding to each of said pinways, means for resiliently urging said pin tumblers outwardly from said magazine through said pinways into said keyway, and

means for selectively maintaining certain of said pin tumblers inoperative.

9. A key plug comprising a core, a keyway in said core, means carried by said core defining pinways communicating with said key way, said means comprising a plurality of tumbler rings rotatable on said core, said rings having portions adapted to overhang the keyway when their pinways are in alignment therewith and to prevent disengagement of tumbler pins associated therewith by key bits.

10. In a lock of the changeable key type, a key plug, a pin tumbler magazine, and a member having parallelly extending sockets for receiving said key plug and said magazine, said socket having the common wall removed to permit coaction of pin tumblers with said key plug; said key plug having a keyway and means defining pinways communicating with said keyway; said pin tumbler magazine having pin tumblers corresponding to each of said pin ways; means associated with certain of said pinways for preventing disengagement of tumbler pins associated therewith by key bits, and other means associated with said pinways for disengaging said tumbler pins on rotation of said key plug in one direction.

11. In a lock of the changeable key type, a pin tumbler magazine, a plurality of pin tumblers arranged therein, a key plug having a keyway, means for urging said pin tumblers outwardly from said magazine into said keyway, and means interposed between said key plug and said magazine for controlling movement of pin tumblers from their inoperative positions within said magazine to their operative positions in said keyway, said means being adapted to bring selected combinations of said pin tumblers into their operative positions while restraining others of said pin tumblers against movement from their inoperative positions within said magazine.

12. In a lock of the changeable key type a pin tumbler magazine, a row of pin tumblers supported therein, a key plug having a keyway, means for urging said pin tumblers outwardly from said magazine into said keyway, and means interposed between said key plug and said magazine for controlling movement of pin tumblers from their inoperative positions within said magazine to their operative positions in said keyway, said means being provided with a plurality of rows of aligned apertures and adapted to be moved relatively to said magazine to bring selected rows of said apertures into line with said row of pin tumblers, the apertures of each row being selectively positioned to permit projection therethrough of a predetermined combination of pin tumblers.

13. A pin tumbler magazine comprising a core, a plurality of pin tumblers supported by said core, a shell about said core, means for resiliently urging said pin tumblers outwardly against said shell, a plurality of rows of apertures in said shell, said shell and core being adapted for relative rotation to bring said rows of apertures selectively in line with said row of pin tumblers, the apertures of each row being selectively positioned to permit projection therethrough of a predetermined combination of pin tumblers, means for holding said core and said shell in a predetermined relation and means for rotating said core relatively to said shell.

14. In a lock of the kind described, a bolt having a rearwardly-extending U-shaped shank portion, spring means so disposed as to urge said bolt to locking position, a rotatable member adapted to be operated by a key, a rotatable cam mounted to engage one leg of said U-shaped shank and actuated by said rotatable member for moving said bolt from locking to unlocking position, a second cam mounted to rotate within the space defined by the legs of said U-shaped member and to engage therewith, means independent of the key operated means for operating said second cam for moving said U-shaped member and selectively locking said bolt against movement from the position assumed at either extreme of its path of reciprocation.

15. In a lock of the kind described, a bolt having a rearwardly extending U-shaped shank portion, spring means so disposed as to urge said bolt to locking position, a rotatable member adapted to be operated by a key, two cams, said cams being rotatable about an axis common with said rotatable member within the space defined by the legs of said U-shaped shank and adapted to engage with said legs, one of said cams being fixed to said rotatable member and actuated thereby for moving said bolt member from locking to unlocking position, the other cam being movable with respect to said rotatable member, and means for operating said other cam independently of said rotatable member for moving said U-shaped shank and selectively locking said U-shaped shank against movement from the position assumed at either extreme of its path of reciprocation.

16. In a lock of the changeable key type, the combination of a cylinder; a key plug mounted to rotate in said cylinder and comprising a core, a keyway in said core, and means carried by said core defining pinways communicating with said keyway, said means comprising a plurality of tumbler rings rotatable on said core; a pin tumbler magazine having a row of pin tumblers supported therein and disposed in operative relation to said key plug; means for urging said pin tumblers outwardly from said magazine into said keyway; and means acting between said pin tumbler rings and a wall of said cylinder for releasably holding said rings with their pinways in position to register with said keyway when the latter is in normal position.

EDWARD A. SCHACHINGER.