(No Model.)

8 Sheets—Sheet 1.

L. STARKENSTEIN.

CAPSULE FILLING MACHINE.

No. 590,502. Patented Sept. 21, 1897.

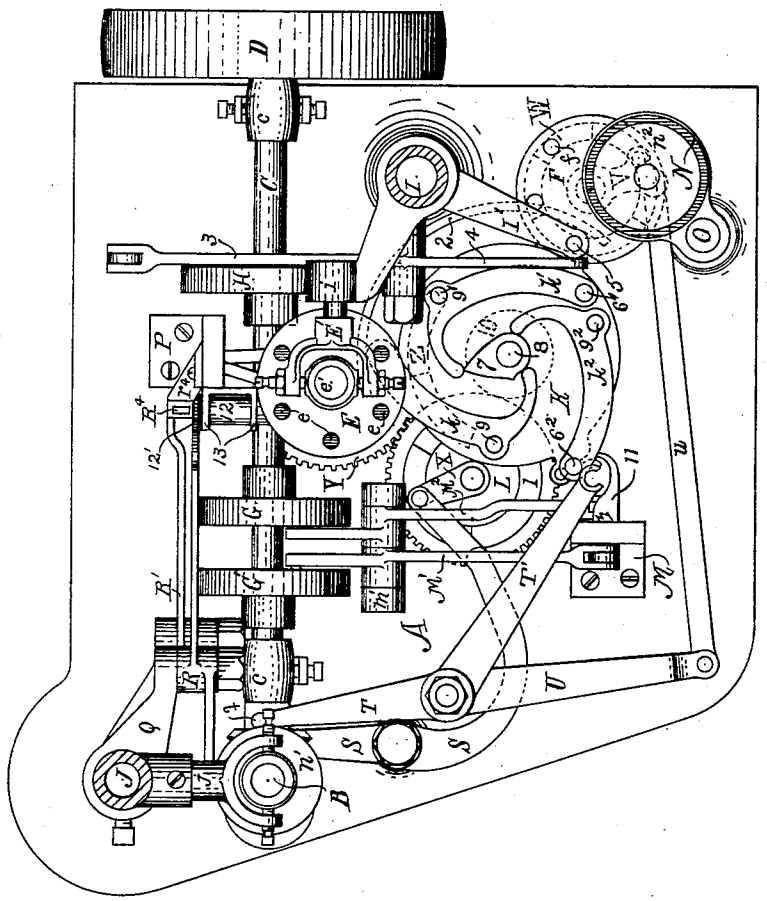

Fig. 1.

Witnesses:

David F. Marauthe

Amelia J. Williams

Inventor.

Louis Starkenstein

THE NORRIS PETERS CO., PHOTO-LITHO., WASHINGTON, D. C.

(No Model.) 8 Sheets—Sheet 2.

L. STARKENSTEIN.

CAPSULE FILLING MACHINE.

No. 590,502. Patented Sept. 21, 1897.

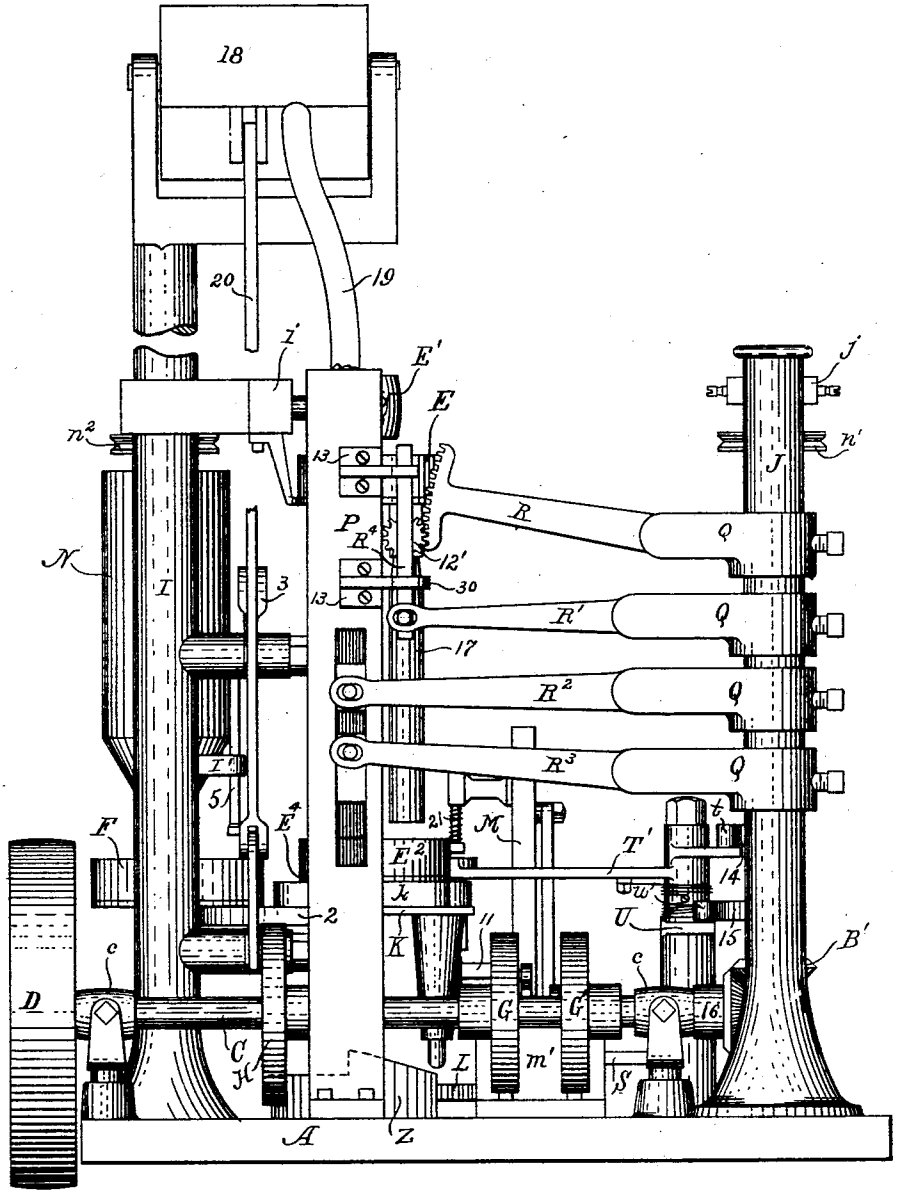

Fig. 2.

Witnesses:

David F. Marquette

Amelia F. Williams

Inventor.

Louis Starkenstein

THE NORRIS PETERS CO., PHOTO-LITHO., WASHINGTON, D. C.

(No Model.) 8 Sheets—Sheet 3.

L. STARKENSTEIN.

CAPSULE FILLING MACHINE.

No. 590,502. Patented Sept. 21, 1897.

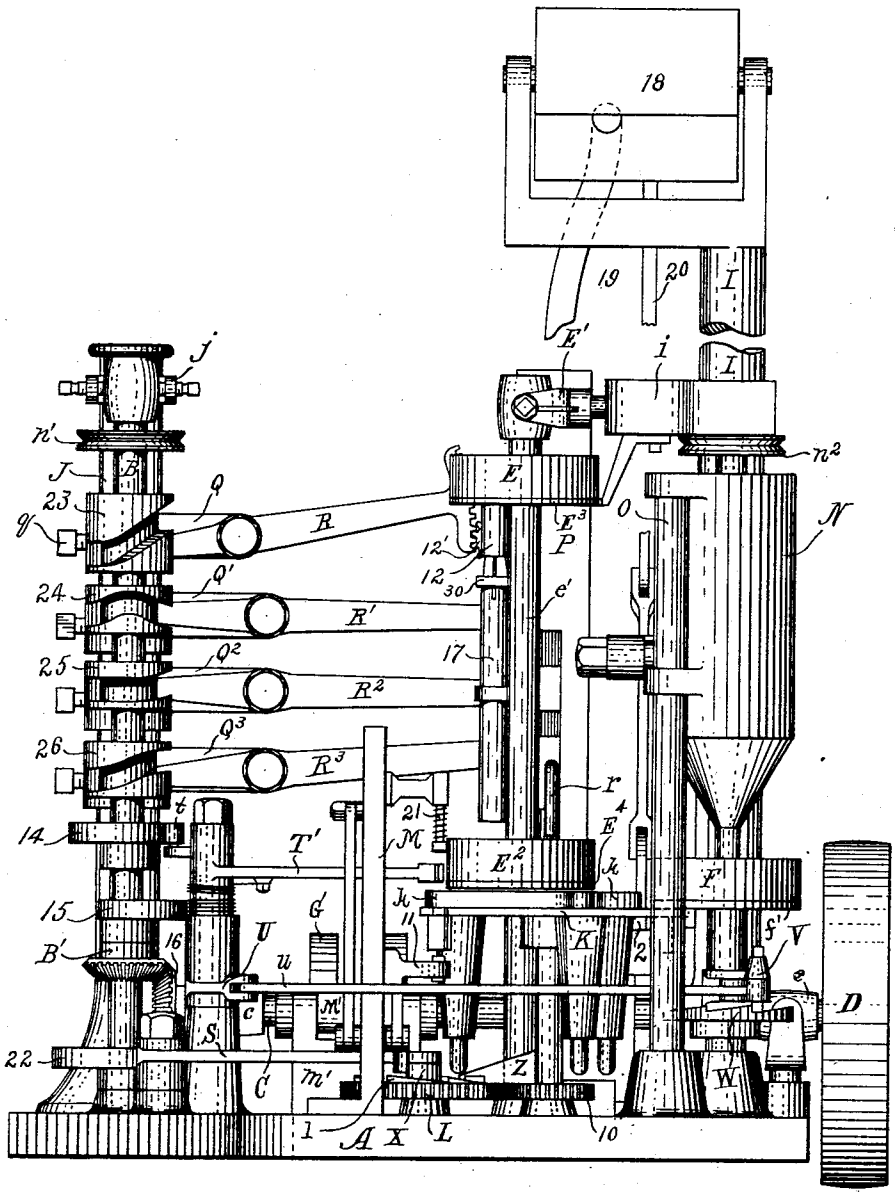

Fig. 3

Witnesses:

David T. Morantette

Amelia J. Williams

Inventor.

Louis Starkenstein

THE NORRIS PETERS CO., PHOTO-LITHO., WASHINGTON, D. C.

(No Model.) 8 Sheets—Sheet 4.

L. STARKENSTEIN.

CAPSULE FILLING MACHINE.

No. 590,502. Patented Sept. 21, 1897.

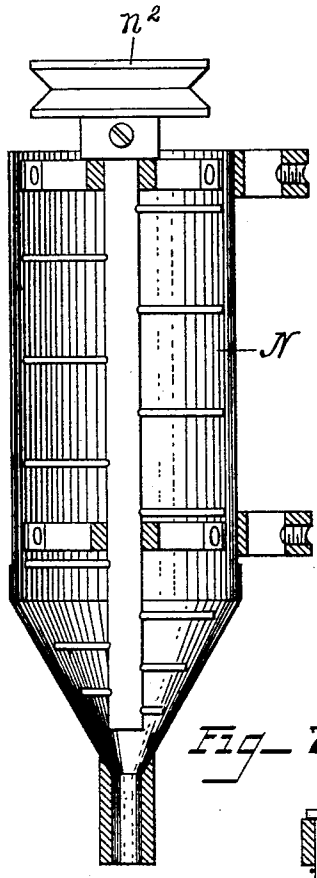

Fig. 7

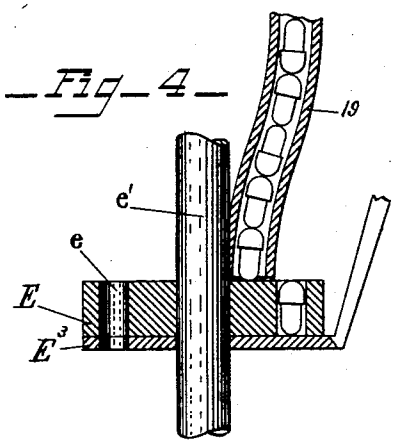

Fig. 4

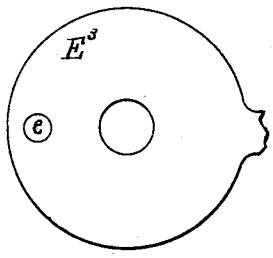

Fig. 5

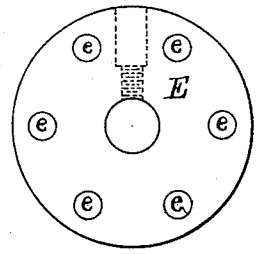

Fig. 6

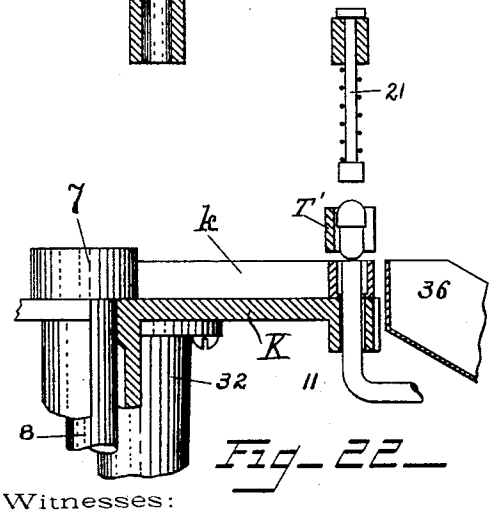

Fig. 22

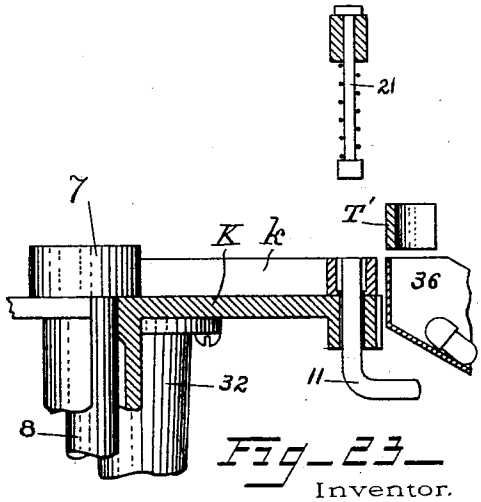

Fig. 23

Witnesses:

David T. Marantette

Amelia J. Williams

Inventor.

Louis Starkenstein

THE NORRIS PETERS CO., PHOTO-LITHO., WASHINGTON, D. C.

(No Model.) 8 Sheets—Sheet 5.

L. STARKENSTEIN.

CAPSULE FILLING MACHINE.

No. 590,502. Patented Sept. 21, 1897.

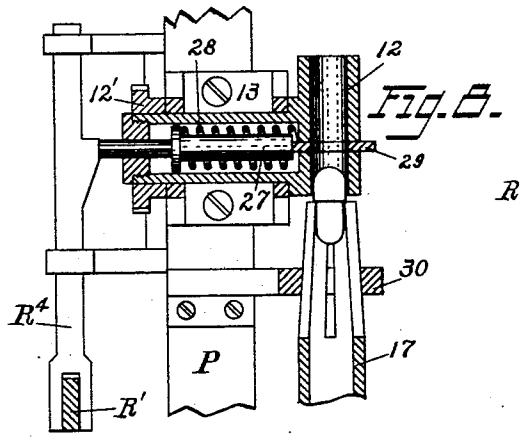

Fig. 8.

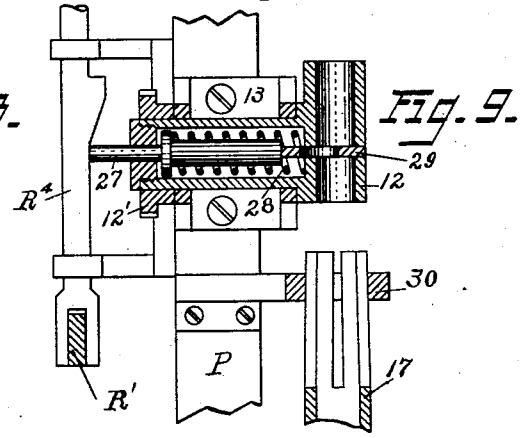

Fig. 9.

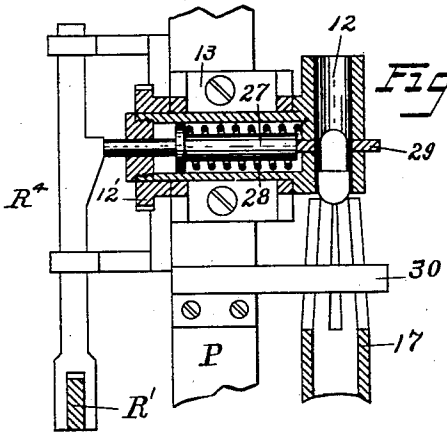

Fig. 10.

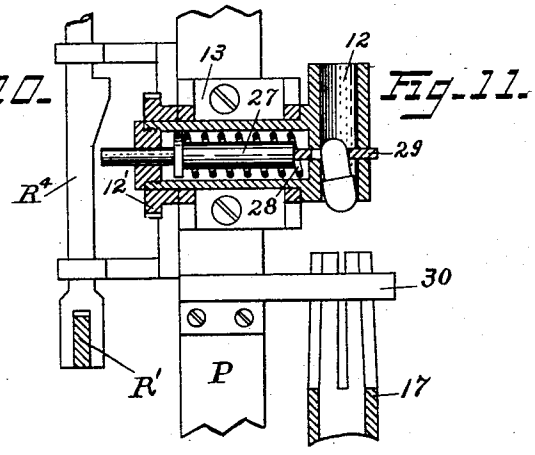

Fig. 11.

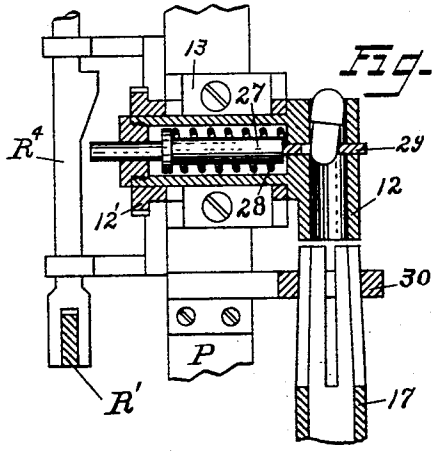

Fig. 12.

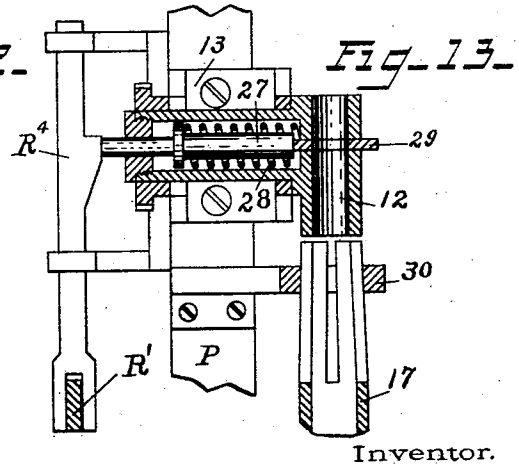

Fig. 13.

Witnesses:

David F. Marauette

Amelia J. Williams

Inventor.

Louis Starkenstein

Attorney.

THE NORRIS PETERS CO., PHOTO-LITHO., WASHINGTON, D. C.

(No Model.) 8 Sheets—Sheet 6.

L. STARKENSTEIN.

CAPSULE FILLING MACHINE.

No. 590,502. Patented Sept. 21, 1897.

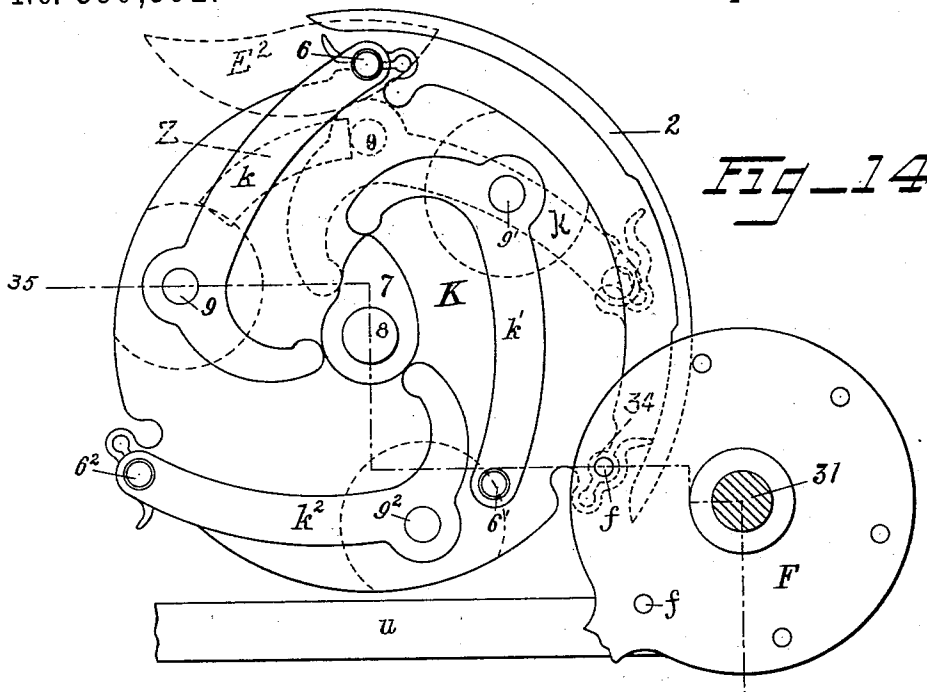

Fig_14_

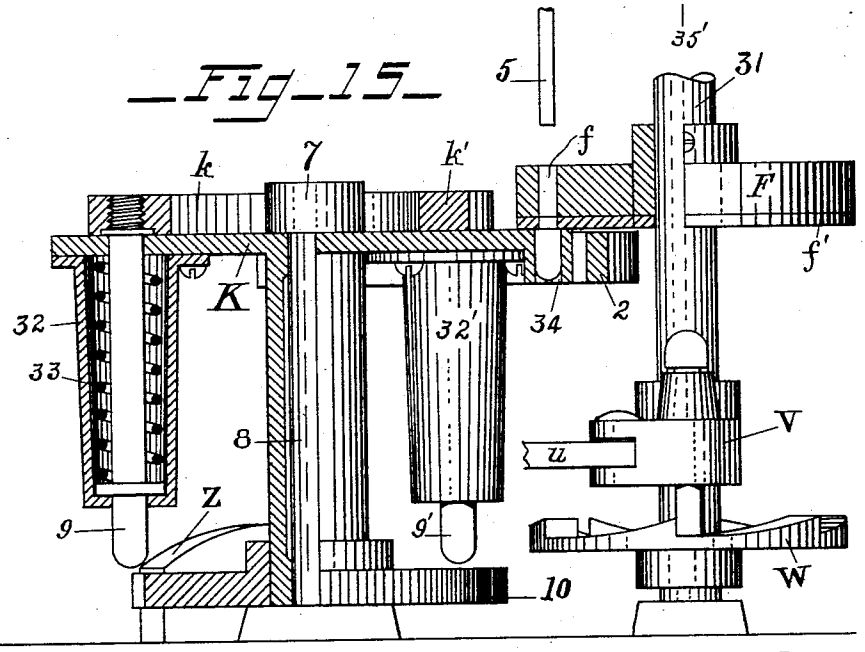

Fig_15_

A

Witnesses:

David T. Marantette

Amelia J. Williams

Inventor.

Louis Starkenstein

THE NORRIS PETERS CO., PHOTO-LITHO., WASHINGTON, D. C.

(No Model.) 8 Sheets—Sheet 7.

L. STARKENSTEIN.

CAPSULE FILLING MACHINE.

No. 590,502. Patented Sept. 21, 1897.

Fig. 16.

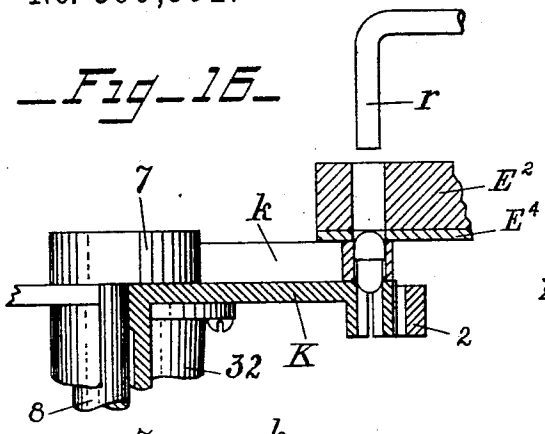

Fig. 17.

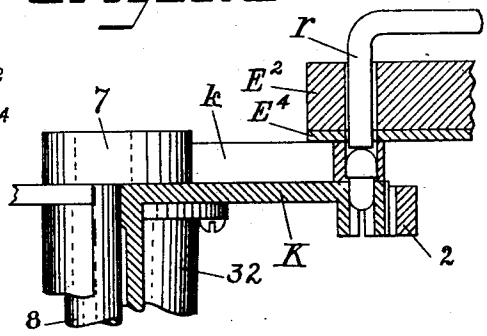

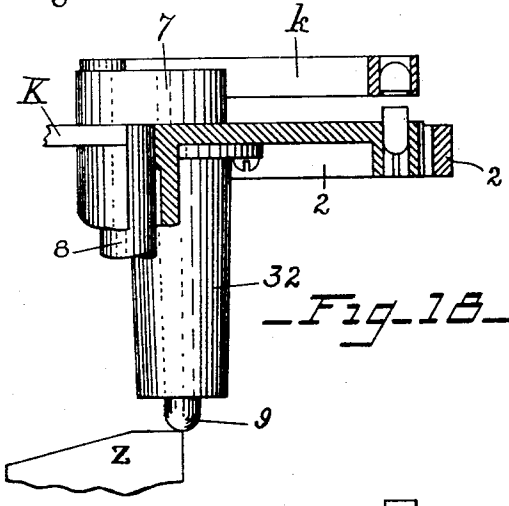

Fig. 18.

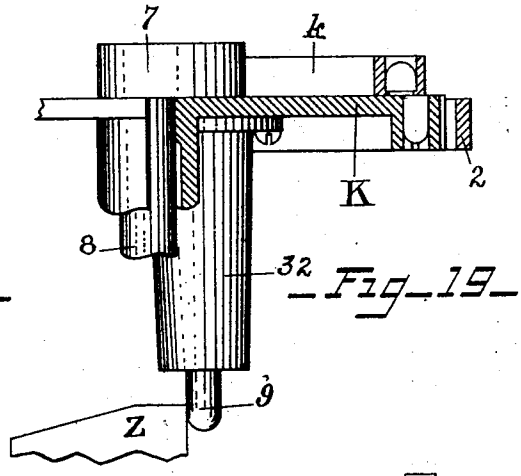

Fig. 19.

Fig. 20.

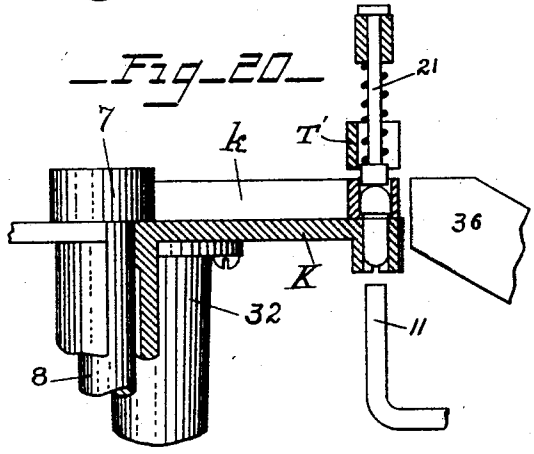

Fig. 21.

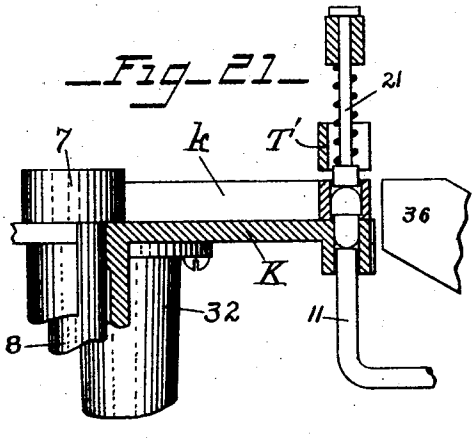

Witnesses:

David T. Marantette

Amelia J. Williams

Inventor:

Louis Starkenstein

THE NORRIS PETERS CO., PHOTO-LITHO., WASHINGTON, D. C.

(No Model.) 8 Sheets—Sheet 8.

L. STARKENSTEIN.

CAPSULE FILLING MACHINE.

No. 590,502. Patented Sept. 21, 1897.

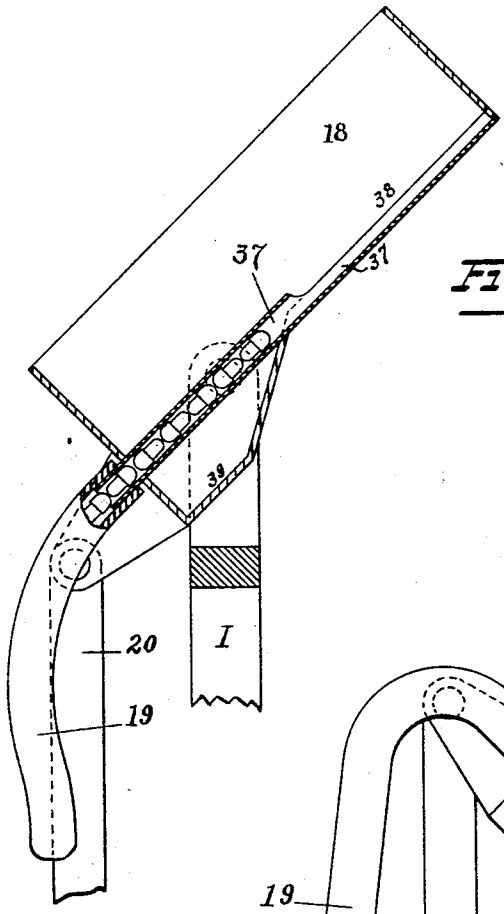

Fig_25_

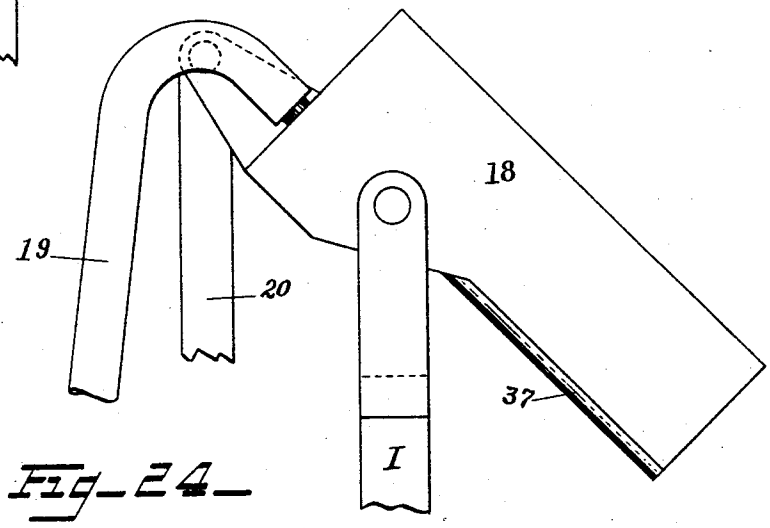

Fig_24_

Witnesses:

David T. Marquette

Amelia J. Williams

Inventor.

Louis Starkenstein

THE NORRIS PETERS CO., PHOTO-LITHO., WASHINGTON, D. C.

UNITED STATES PATENT OFFICE.

LOUIS STARKENSTEIN, OF DETROIT, MICHIGAN, ASSIGNOR TO THE UNITED STATES CAPSULE COMPANY, OF NEW JERSEY.

CAPSULE-FILLING MACHINE.

SPECIFICATION forming part of Letters Patent No. 590,502, dated September 21, 1897.

Application filed October 29, 1896. Serial No. 610,437. (No model.)

To all whom it may concern:

Be it known that I, LOUIS STARKENSTEIN, of Detroit, in the county of Wayne and State of Michigan, have invented a new and useful Improvement in Machines for Automatically Filling Gelatin Capsules with Medicine, of which the following is a specification.

My invention consists in an improved machine for automatically filling gelatin capsules with medicine, hereinafter fully described and claimed.

Figure 1 is a top plan view of the lower part of the machine. Fig. 2 is a rear elevation of the complete machine, and Fig. 3 is a front elevation thereof. Fig. 4 is a vertical section through the flexible tube leading from the feeding-hopper and also through the capsule-holder and number-plate, which are also shown in plan views in Figs. 5 and 6. Fig. 7 is a vertical central section through the medicine-feeding funnel. Figs. 8, 9, 10, 11, 12, and 13 are central sections showing in detail the reversing mechanism. Fig. 14 is a top plan view of the separating and joining device. Fig. 15 is a section through the separating and joining device, taken on the dotted lines 35 and 35', Fig. 14. Figs. 16, 17, 18, 19, 20, 21, 22, and 23 are sectional views showing in detail the operations of the separating and joining device. Figs. 24 and 25 are views of the hopper in different positions.

I believe that I am the first man who has ever made a machine which will automatically feed empty gelatin capsules in proper relation, will then unjoin them, will fill the body with medicine, and will then join them and throw them out, and my machine embraces four groups of mechanism, one of which comprises mechanism for feeding the capsules from a hopper in proper position, the second of which comprises mechanism for unjoining the capsules, the third of which comprises mechanism for filling the bodies with medicine, and the fourth of which comprises mechanism which rejoins the capsules and throws the filled and joined capsules out of the machine.

Feeding mechanism.—This feeding mechanism consists of a hopper 18, provided at its lower end with a flexible tube 19. The hopper 18 has its bottom 38 depressed, as shown at 39, for about one-half of its length. The tube 37 enters through one end of said hopper, runs the whole length thereof, passing under the bottom 38, and is cut away along this portion of its length, so as to form a trough in said bottom. The hopper is hinged in a frame and is rocked into the two positions shown in Figs. 25 and 24 by connecting-rod 20, operated by cam H on shaft C. When in the position shown in Fig. 24, the capsule falls to that part of the bottom of the hopper into which the tube 37 opens, so that as the hopper rocks back into the position shown in Fig. 25 some of the capsules fall into said tube 37, from which they pass down into tube 19. When this hopper is filled with empty capsules, there is of course no control over the manner in which they shall be presented to the tube at the lower end of the hopper, and some will go down body first, in which position my mechanism is arranged to operate upon them, while others will go down cap first, in which position the mechanism as arranged will not operate, as shown in Fig. 4.

The presentation of the capsules is governed by the following mechanism: Below the tube 19 there is placed a disk E, having a series of holes *e* therein for holding the capsules as they drop out of the tube. (Shown in Fig. 4.) This disk E rotates upon a stationary plate E^3, which is shown in top plan view in Fig. 5, and the disk E is also shown in top plan view in Fig. 6. The disk E is rotated so that the feeding-tube 19, Fig. 4, is in line with one of the holes *e* in E, and thus one capsule is deposited in one of the holes *e* in E, which is rotated one-sixth of a revolution at a time until the hole in E lines with the hole *e* in E^3, allowing the capsule to drop into the reversing mechanism. Fig. 8 is a central vertical section through the reversing mechanism and shows this to have just received a capsule from the disk E, Fig. 4. It consists of a short section of tube 12, which is carried on a hollow sleeve adapted to rotate in the bearing 13 and provided at one end with a gear-wheel 12'. Within this tube lies a plunger 27, encircled by a spiral spring 28, holding the plunger normally in the position shown in Fig. 8. The end of this plunger carries a cut-off 29, passing through a slot in the tube and provided with an aperture normally registering with said

tube when the plunger is forced in by vertical wedge R^4, which is driven by lever R', operated by cam 24. Immediately below said section of tube 12 is a tube 17, whose upper end is slotted longitudinally so as to be compressible and which reciprocates through a conical opening in a stationary plate 30, said tube rising and falling with each motion of the machine. Tube 17 is moved up and down by lever R^2, which is operated by cam 25 and constitutes a selecting mechanism to discriminate between capsules which are properly presented and those which are wrongly presented. When a capsule has come down properly—namely, body first—the body falls through the contracted opening in the top of the tube 17, while the cap, being larger in diameter, cannot pass through, and the shoulder formed by the cap holds it in the position shown in Fig. 8. In Fig. 9 two additional movements are shown. First, the vertical wedge R^4 in the bearings 13' allows the spring 28 to retract, which brings the plunger 27 to the position shown and which would have caught the capsule had it come down wrong. As soon as the wedge R^4 has raised, tube 17 drops, allowing the contracted opening in the end to expand to its normal size, which is large enough to admit the cap of the capsule to fall through tube 17 to the capsule-holder E^2, Figs. 2 and 3, which is identical with the capsule-holder shown in Fig. 4. The reversing mechanism makes the same motion whether the capsule falls into it properly or not. If the capsule comes down properly, it simply goes through the motion empty. When the capsule comes down wrong, its cap strikes the contracted opening in the top end of tube 17, thus keeping nearly the whole length of the capsule in the tube 12 and the upper end encircled by the aperture in cut-off 29, as shown in Fig. 10. In Fig. 11 the vertical wedge R^4 has been raised, releasing the spiral spring and bringing the plunger 27 back, allowing the cut-off 29 to catch the capsule by the body. The tube 17 immediately drops, as shown. In Fig. 12 the reversing mechanism has rotated half-way around, bringing the capsule in the correct position. Fig. 13 shows the wedge R^4 brought down again, compressing the spiral spring 28 and allowing the aperture in the cut-off 29 to register with the aperture in 12, thus releasing the capsule.

It will be seen that the elements which determine whether or not the capsule shall be reversed are the difference in diameter between the cap and body of the capsule and the difference in length between the whole capsule and the cap in connection with a primary receiving-hole (in this case the upper end of tube 17) large enough to receive the body of the capsule, but too small to receive the cap and distant from the reversing mechanism farther than the length of the caps and less than the length of the capsule. These elements cause a capsule properly presented to fall below the reversing mechanism and hold a capsule improperly presented up within the grasp of the reversing mechanism.

Unjoining mechanism.—E^2 represents a disk secured on shaft e', so that it turns with said shaft in unison with disk E. E^2 has in it as many holes as disk E and similarly spaced, so that each time a capsule drops through the tube 17 it falls into a hole in E^2 and is carried forward by said disk through one-sixth of a revolution until said hole registers with a hole in the stationary disk E^4.

K represents a circular plate provided with a central sleeve surrounding a stationary shaft 8, having a gear-wheel 10 on its lower end. Equidistant around the edge of plate K three holes are formed in said plate, each a trifle larger than the body of the capsule, but made compressible by being slotted, and the outer lip of such hole running against the segmental cam 2 at such times as it is desired to firmly hold the body of a capsule in such holes, as shown in Figs. 16 to 21 and in dotted lines and full lines in Fig. 14. There are half as many of these receptacles in plate K as there are holes in disk E^2, and plate K, which is driven by a gear 10 at its lower end, moves twice as far at each motion of the machine as does disk E^2.

7 represents a cam secured on the upper end of the shaft 8 and stationary.

k, k', and k^2 represent three arms, each of which is pivoted on plate K by pins 9, 9', and 9^2, respectively, whose short arms extend in toward the center of the plate, where they are actuated by cam 7, said cam serving to always hold said arms in certain definite positions. Through the end of each arm k, k', and k^2 a hole is formed which is of two diameters, as shown in the drawings, the upper and larger diameter being large enough to receive the cap, while the lower and smaller diameter will receive the body, but not the cap, of a capsule. When the capsule drops from disk E^2, its body is received in the receptacle in plate K, while its cap is retained in the receptacle in arm k, which at this time registers with the receptacle in plate K, this position being indicated by the arm k in Fig. 14, and the capsule is driven down to place by a plunger r, as shown in Fig. 17, which is driven by lever R^3, operated by cam 26. Plate K now advances one-third of a revolution, the gear 10 being turned by the gear L, which has upon its upper face six ratchet-teeth I and receives a step-by-step motion through the arm S, driven by cam 22 on shaft B. The pins 9, 9', and 9^2, upon which the arms k, k', and k^2 are carried, extend down through plate K and through boxes 32 on the under side of the plate, in each of which boxes lies a coil-spring 33, one end of which presses against the under side of plate K, while the other end presses against a collar on said pin, as clearly shown in Fig. 15. The lower end of said pin 9 travels over an inclined cam Z on the bed-plate of the machine, so that as the plate K moves to carry arm k from the

position shown in full lines in Fig. 14 to the position shown in dotted lines in said figure the pin 9 is lifted, carrying with it the arm *k* and separating the cap from the body of the capsule, as shown in Fig. 18, and a further motion of the plate K causes cam 7 to swing arm *k*, so that the cap and body of the capsule no longer register, this position being indicated by arm *k'*, Fig. 14, and by Fig. 19. By this time pin 9 has passed off incline Z, so that arm *k* lies on the top of the plate K and in its descent presses the body of the capsule down flush with the upper surface of the plate K, as shown in Fig. 19.

Filling mechanism.—When the capsule has thus been unjoined, the further motion of the plate K brings the receptacle containing the body of the capsule under one of a series of holes *f* in disk F, which disk is fastened on shaft 31 and moves in unison with disks E and E^2 through cam 15, lever U and connecting-rod *u*, ratchet W, and lever B. N represents a hopper for containing medicine, with its spout extending down in close contact with said disk F over the line of holes *f*, so that as each hole *f* comes under the spout of said hopper it becomes filled with medicine, which is prevented from falling out of the hole by a stationary plate *f'* under disk F until such time as the holes *f* register with the capsule-body which is held in plate K, as just described, this conjunction being shown in Figs. 14 and 15, at which time a plunger 5, actuated by cam H on shaft C through connecting-rods 20 and C^3, is forced down through hole *f*, forcing the medicine into the capsules. Plunger 5 is retracted and plate K receives another impulse, carrying the capsule filled with medicine through another one-third of a revolution, at which time cam 7 permits arm *k*, in the outer end of which the cap is carried, to come back and register with the hole *f*. During these operations and up to this time the receptacle in plate K which has been holding the body of the capsule and which is compressible has been compressed by running against the inner surface of the cam 2 at all times except when, as shown in dotted lines in Fig. 14, it is temporarily released to permit the operation of bringing the body of the capsule flush with the upper side of the plate K, as shown in Fig. 19.

Joining mechanism.—The last impulse of the plate K, advancing it through one-third of its revolution, brings the cap held in arm *k* and the body of the capsule held in plate K in line, as shown in Fig. 20, at which time a spring-plunger 21 is brought down by cam G on shaft C through connecting-rod M', so that it rests lightly on the top of the cap, and a plunger 11 is thrown up by another cam G on said shaft C through connecting-rod M^2, forcing the body of the capsule up through the cap. Cam G', which operates spring-plunger 21, raises said plunger out of the way, as shown in Fig. 2, while cam G continues the rising motion of plunger 11, but more slowly, until the joined capsule is forced out of the plate K and arm *k* by means of a lever T T', the arm T of which is operated by cam 14 on shaft B. The capsule is thrown off into a receptacle 36, as shown in Fig. 23. Plunger 11 now recedes and the operation of the machine continues as before, three capsules being unjoined, filled, and rejoined at each revolution of the plate K when the machine is proportioned as I have illustrated it in these drawings.

The same mechanism unjoins and then joins the capsule after being filled, and may be considered either as two instrumentalities or as one instrumentality having two operations, between which another instrumentality or mechanism performs its operation.

Motion is communicated to the whole machine through belt-pulley D on main shaft C, which drives shaft B through bevel-gears 16 and B'.

I have illustrated my invention by a machine which has a certain capacity with each revolution of the main shaft C, but it is evident that this capacity may be increased or decreased without departing from the spirit of my invention.

This machine is entirely automatic, and on being put in motion performs all its operations regularly and continuously so long as the capsule-hopper is kept supplied with empty capsules and the medicine-hopper with medicine.

As soon as the principle of this invention is explained to good mechanics, it is entirely probable that they will readily make changes in the specific mechanical elements of some or all of the four groups of mechanism above described without departing from the spirit of my invention, and therefore I do not wish to be understood as limiting myself to the details of construction shown and described.

What I claim as my invention, and desire to secure by Letters Patent, is—

1. The combination, in a machine for automatically filling gelatin capsules with medicine, of capsule-feeding mechanism, mechanism for unjoining a capsule, mechanism for filling the capsule with medicine, and capsule-joining mechanism, substantially as set forth.

2. In a machine for automatically filling gelatin capsules the combination with a reversing mechanism of selecting mechanism located at a distance from the reversing mechanism greater than the length of the cap, and less than the length of the capsule.

3. In a machine for automatically filling gelatin capsules an unjoining mechanism consisting of two members, one of which has formed therein an aperture of two diameters, and the other of which has formed therein a compressible receptacle, means for moving said first member away from said second member, and means for simultaneously compressing the receptacle in said second member.

4. In a machine for automatically filling gelatin capsules the combination with cap-

sule-feeding mechanism, of appliances for removing the cap from the body of a capsule, means for carrying the body to mechanism for filling said body with medicine, and means for replacing said cap on said body, substantially as set forth.

5. In a machine for automatically filling gelatin capsules the combination with an unjoining and joining mechanism, consisting of two members, one adapted to hold the cap and the other adapted to hold the body of a capsule, of means for moving said two members in unison, appliances for moving the cap member away from and transversely of the body member, a measuring-receptacle for medicine, means for causing said medicine-receptacle to register with the body of the capsule and for discharging said medicine into said capsule, means for moving the cap member transversely of and back to the body member, and means for pushing the body of the capsule into the cap, and then ejecting the joined capsule.

6. In a machine for automatically filling gelatin capsules, the combination with a conduit for delivering empty capsules successively to the machine, of a selecting mechanism having an aperature large enough to receive the body of the capsule, and too small to receive the cap, and mechanism for reversing capsules presented to the selecting mechanism cap end first, substantially as set forth.

7. In a machine for automatically filling gelatin capsules, the combination of a selecting mechanism arranged in the line of the capsule-delivery and having an aperture to receive the capsule, means for contracting the aperture at the moment of selection to a diameter less than that of the cap and greater than that of the body and subsequently expanding said aperture to a diameter greater than that of the cap, and mechanism for reversing capsules presented to the selecting mechanism cap end first, substantially as described.

8. In a machine for automatically filling gelatin capsules, the combination of capsule feeding and selecting mechanism, mechanism for reversing capsules presented to the selecting mechanism cap end first, unjoining and joining mechanism, and filling mechanism timed to operate between the unjoining and joining operations, substantially as described.

LOUIS STARKENSTEIN.

Witnesses:
DAVID T. MARANTETTE,
AMELIA J. WILLIAMS.