(12) INTERNATIONAL APPLICATION PUBLISHED UNDER THE PATENT COOPERATION TREATY (PCT)

(19) World Intellectual Property Organization
International Bureau

(43) International Publication Date
1 August 2013 (01.08.2013)

WIPO | PCT

(10) International Publication Number
WO 2013/112170 A1

(51) International Patent Classification:
F01N 3/24 (2006.01)

(21) International Application Number:
PCT/US2012/022841

(22) International Filing Date:
27 January 2012 (27.01.2012)

(25) Filing Language: English

(26) Publication Language: English

(71) Applicant *(for all designated States except US)*: **INTERNATIONAL ENGINE INTELLECTUAL PROPERTY COMPANY, LLC** [US/US]; 2701 Navistar Drive, Lisle, Illinois 60532 (US).

(72) Inventors; and

(75) Inventors/Applicants *(for US only)*: **MILLER, Michael James** [US/US]; 600 W. Larkdale Lane, Mt. Prospect, Illinois 60056 (US). **NAGABUSHAN-VENKATESH, Prasanna** [IN/US]; 1959 Penfold Place, Northbrook, Illinois 60062 (US). **YOON, Timothy** [US/US]; 1959 Penfold Place, Northbrook, Illinois 60062 (US). **GRIFFIN, Gregory A.** [US/US]; 1724 Avalon Ct., Glendale Heights, Illinois 60139 (US). **SINGH, Navtej** [IN/US]; 2233 South Highland Avenue, #1015, Lombard, Illinois 60148 (US).

(74) Agent: **NIMZ, Jack D.**; 2701 Navistar Drive, Lisle, Illinois 60532 (US).

(81) Designated States *(unless otherwise indicated, for every kind of national protection available)*: AE, AG, AL, AM, AO, AT, AU, AZ, BA, BB, BG, BH, BR, BW, BY, BZ, CA, CH, CL, CN, CO, CR, CU, CZ, DE, DK, DM, DO, DZ, EC, EE, EG, ES, FI, GB, GD, GE, GH, GM, GT, HN, HR, HU, ID, IL, IN, IS, JP, KE, KG, KM, KN, KP, KR, KZ, LA, LC, LK, LR, LS, LT, LU, LY, MA, MD, ME, MG, MK, MN, MW, MX, MY, MZ, NA, NG, NI, NO, NZ, OM, PE, PG, PH, PL, PT, QA, RO, RS, RU, RW, SC, SD, SE, SG, SK, SL, SM, ST, SV, SY, TH, TJ, TM, TN, TR, TT, TZ, UA, UG, US, UZ, VC, VN, ZA, ZM, ZW.

(84) Designated States *(unless otherwise indicated, for every kind of regional protection available)*: ARIPO (BW, GH, GM, KE, LR, LS, MW, MZ, NA, RW, SD, SL, SZ, TZ, UG, ZM, ZW), Eurasian (AM, AZ, BY, KG, KZ, MD, RU, TJ, TM), European (AL, AT, BE, BG, CH, CY, CZ, DE, DK, EE, ES, FI, FR, GB, GR, HR, HU, IE, IS, IT, LT, LU, LV, MC, MK, MT, NL, NO, PL, PT, RO, RS, SE, SI, SK,

[Continued on next page]

(54) Title: CROSS STYLE (4 PORT) AMMONIA GAS INJECTOR

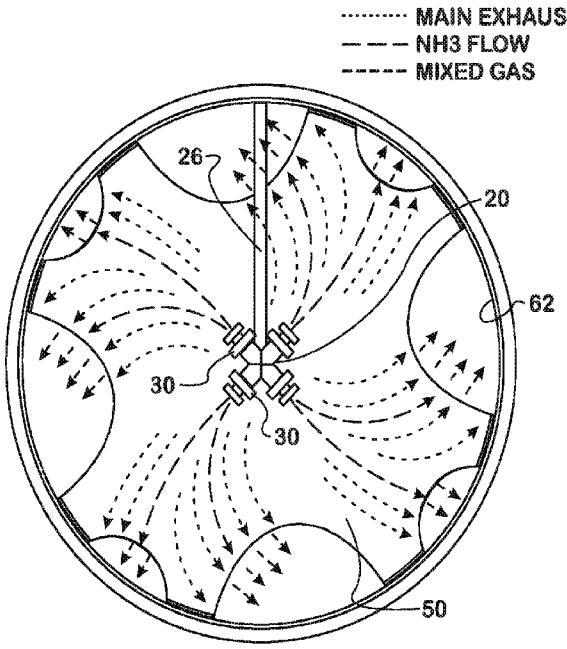

FIG. 3

(57) Abstract: An ammonia (reductant) injector for delivering a ammonia into an engine exhaust stream is disclosed. Generally speaking, the injector has a body with an inlet fluidly coupled to a plurality of channels within the body, a plurality of discharge ports, each port being fluidly coupled to at least one channel, and an ammonia feed line connected to the inlet of the body. The plurality of discharge ports are preferably spaced one from another such as to optimize the dispersion of ammonia from the ports throughout a cross-sectional portion of an engine exhaust stream.

WO 2013/112170 A1

SM, TR), OAPI (BF, BJ, CF, CG, CI, CM, GA, GN, GQ, GW, ML, MR, NE, SN, TD, TG).

Declarations under Rule 4.17:

— *as to the identity of the inventor (Rule 4.17(i))*

— *as to applicant's entitlement to apply for and be granted a patent (Rule 4.17(ii))*

Published:

— *with international search report (Art. 21(3))*

— *with amended claims (Art. 19(1))*

CROSS STYLE (4 PORT) AMMONIA GAS INJECTOR

TECHNICAL FIELD

[0001] The present device relates to a gas injector for a vehicle exhaust after-treatment system. Specifically, the device relates to an ammonia gas injector for NOx reduction in a vehicle exhaust after-treatment system.

BACKGROUND

[0002] Compression ignition engines provide advantages in fuel economy, but produce both NO_x and particulates during normal operation. New and existing regulations continually challenge manufacturers to achieve good fuel economy and reduce the particulates and NO_x emissions. Lean-burn engines achieve the fuel economy objective, but the high concentrations of oxygen in the exhaust of these engines yields significantly high concentrations of NO_x as well. Accordingly, the use of NO_x reducing exhaust treatment schemes is being employed in a growing number of systems.

[0003] One such system is the direct addition of a reductant or reducing agent, such as ammonia gas, to the exhaust stream. It is an advantage to deliver ammonia directly into the exhaust stream in the form of a gas, both for simplicity of the flow control system and for efficient mixing of the reducing agent, ammonia, with the exhaust gases. The direct use of ammonia also eliminates potential difficulties related to blocking of the dosing system, which may be caused by precipitation or impurities, e.g., in a liquid-based urea solution. In addition, an aqueous urea solution cannot be dosed at a low engine load since the temperature of the exhaust line would be too low for complete conversion of urea to ammonia (and CO_2).

[0004] A couple specific challenges with the direct injection of ammonia relate to dispersion and mixing of the reducing agent with the hot exhaust gases. The dispersion issue considers how to deliver or spread ammonia to the greatest volume of flowing exhaust, while the mixing issue questions how to create the most homogenous mixture of exhaust and ammonia to facilitate NOx reduction.

[0005] Thus, the present system provides both a device for adequately dispersing and sufficiently mixing a reductant, such as ammonia into an exhaust gas stream of a vehicle. These and other problems are addressed and resolved by the disclosed system and method of the present application.

SUMMARY

[0006] There is disclosed herein a device which avoids the disadvantages of prior devices while affording additional structural and operating advantages.

[0007] Generally, a reductant injector for delivering reductant into an engine exhaust stream comprises a body having an inlet fluidly coupled to a plurality of channels within the body, a plurality of discharge ports, each port being fluidly coupled to at least one channel, and a reductant feed line connected to the inlet of the body. The plurality of discharge ports are preferably spaced one from another such as to optimize the dispersion of reductant from the ports throughout a cross-sectional portion of an engine exhaust stream.

[0008] In an embodiment, an aspect of the subject injector includes discharging the reductant from the ports in a direction perpendicular the engine exhaust stream travel. In another embodiment, the injector ports discharge reductant in a direction parallel to the engine exhaust

stream, preferably in an upstream direction. An aspect of the latter configuration includes shielding of the ports to prevent plugging.

[0009] In an embodiment, the injector comprises four discharge ports. Preferably, the four ports are spaced approximately 90 degrees from one another. An aspect of this configuration includes the body being shaped like a cross having four arms at the end of each of which is positioned a discharge port.

[0010] In an embodiment, the reductant feed line positions the injector within an engine exhaust stream, most preferably proximate the center of the stream. It is an aspect of this embodiment that the feed line provides stability to the injector.

[0011] In an embodiment, the reductant may be ammonia.

[0012] These and other aspects of embodiments of the invention are described in the following detailed description and shown in the appended drawing figures.

BRIEF DESCRIPTION OF THE DRAWINGS

[0013] For the purpose of facilitating an understanding of the subject matter sought to be protected, there are illustrated in the accompanying drawings embodiments thereof, from an inspection of which, when considered in connection with the following description, the subject matter sought to be protected, its construction and operation, and many of its advantages should be readily understood and appreciated. The components in the drawings are not necessarily to scale, emphasis instead being placed upon illustrating the principles of the invention. In the following description and throughout the numerous drawings, like reference numbers are used to designate corresponding parts.

[0014] FIG. 1 is a side cross-sectional view of a vehicle after-treatment system illustrating an embodiment of the present NOx reduction system positioned within the vehicle exhaust gas;

[0015] FIG. 2 is a side cross-sectional view of the vehicle after-treatment system similar to that shown in FIG. 1, further illustrating exhaust gas flow, ammonia gas dispersion and mixing of the two;

[0016] FIG. 3 is a close-up of the upstream side of an embodiment of the NOx reduction system;

[0017] FIG. 4 is a close-up of an embodiment of the injector;

[0018] FIG. 5 is a perspective view of an embodiment of the ammonia injector;

[0019] FIGS. 6A-B are side views of an alternate embodiment of the ammonia injector;

[0020] FIG. 7 is a perspective view of an embodiment of the ammonia injector positioned upstream of an embodiment of the mixing plate;

[0021] FIG. 8 is a side view of an embodiment of the mixing plate;

[0022] FIG. 9 is a front perspective of the mixing plate shown in FIG. 9; and

[0023] FIG. 10 is a side view illustrating the use of the mixing plate to support the injector.

DETAILED DESCRIPTION

[0024] With reference to FIGS. 1-10, embodiments of a system and methods are described to one of skill in the relevant art. Generally speaking, a NOx reduction system, designated with the reference number 10 in the figures, typically works in conjunction with an exhaust gas after-treatment system 12 and comprises a mixing chamber 22, an ammonia injector 20 and a mixing plate 50. Typically, the reductant provided for use in the system 10 is carried on-board in canisters (not shown) which require periodic recharging. **While embodiments using ammonia as the preferred reductant are disclosed, the invention is not limited to such embodiments,**

and other reductants may be utilized instead of, or in addition to, ammonia for carrying out the inventions disclosed and claimed herein. Examples of such other, or additional reductants include, but are not limited to, urea, ammonium carbamate, and hydrogen.

[0025] FIGS. 1 and 2 illustrate a vehicle exhaust after-treatment system 12 having, in downstream direction, an exhaust inlet 16, a diesel oxidation catalyst (DOC) canister 17, the NOx reduction device 10, a NOx particulate filter (NPF) canister 18, and an outlet 19. FIG. 2 further illustrates the exhaust stream flow before the NOx reduction device 10 (flow A), during mixing (flow B) and after the device 10 (flow C). Flow A is comprised entirely of engine exhaust gases, while the composition of flow B is (1) exhaust gases, (2) ammonia gas, and (3) a mixed gas, and flow C is comprised almost entirely of mixed gas.

[0026] FIG. 3 shows the preferred centered positioning of the injector 20 within the mixing chamber 22 (i.e., the space between the DOC and the NPF). Positioning the injector 20 in the chamber 22 center allows for optimum dispersion of the ammonia gas from a fixed, single, multi-port injector 20.

[0027] Referring to FIGS. 3-6, preferred embodiments of the injector 20 are illustrated. Generally, the injector 20 comprises an inlet 24 which couples directly to an ammonia feed line 26 at one end and to the injector body 28 at the other end. The inlet 24 is preferably on a back surface of the injector body 28, as illustrated in FIGS. 1 and 2. Alternatively, the inlet 24 may be positioned between two adjacent arms 30, as shown in FIG. 4. Multiple discharge ports 32 are used to disperse ammonia throughout the mixing chamber 22. In the embodiment of FIGS. 3-6, four discharge ports 32A-D are positioned one at the end of each of four arms 30A-D. As shown in FIGS. 3-5, the injector 20 is formed in the shape of a cross, separating the ports 32A-D by

about 90 degrees one from another. A plurality of channels 34 within the injector 20 direct the ammonia gas from the inlet 24 to the discharge ports 32.

[0028] While other multi-port injector configurations are possible, the four-port cross-injector 20 shown has proven to be most effective at disbursing ammonia throughout the mixing chamber 22. The injector 20 is positioned substantially in the center of the mixing chamber 22 with the discharge ports 32 aimed in a direction perpendicular (or substantially perpendicular) to the exhaust stream flow.

[0029] In an alternate embodiments shown in FIGS. 6A-B, the injector discharge ports 32 are aimed directly upstream (FIG. 6A) or at some angle greater than zero incident to the exhaust stream (FIG. 6B) to disburse ammonia. However, such a configuration exposes the ports to plugging. Accordingly, to prevent plugging of the discharge ports 32 with exhaust particulates, shrouds 40 are used to shield each of the ports 32. The shrouds 40 are attached to the body 28 of the injector 20 and are preferably conical in shape to minimize the creation of exhaust backflow. The number of shrouds 40 should correspond to the number of ports 32, but it may be conceivable to cover more than a single port with a shroud for some applications.

[0030] Another important aspect of the NOx reduction system 10, is the use of mixing plate 50. Referring to FIGS. 7-9, the mixing plate 50 is comprised of a multi-faced, multi-armed body 52, with at least two tiers of cutouts 54 dispersed about the circumference of the plate 50. The mixing plate 50 is positioned downstream of the injector 20, as shown in FIG. 1.

[0031] In the illustrated embodiment, the mixing plate body 52 has four arms 56 extending from the plate center 57. Each arm 56 has a surface or face 58 and is similarly angled or twisted to one side, much like a fan blade, as best shown in FIG. 8. The angled plate face 58 is used to deflect the gas streams, as shown in FIG. 3, and create turbulent flow to cause efficient mixing.

Tabs 59 at the end of each arm 56, with reference to FIG. 9, provide a surface for attachment of the mixing plate 50 to the canister wall 62. Other attachment means may be equally suitable.

[0032] The cutouts 54 are considered to be two-tiered because of the distance each is from the plate center. The first tier cutouts 54A are positioned between adjacent arms 56 and extend closest to the plate center, while the second tier cutouts 54B are centered at the top of each arm 56 and are shorter. As a result, the mixing gases—i.e., exhaust gases and ammonia gas—are diverted laterally before passing the plate 50 into the NPF 18. Additional cutout tiers may be used if desired. Further, while the preferred cutouts 54 are shown to be semi-circular, other shapes and sizes may be used to accomplish the desired distribution of gases within the mixing chamber 22.

[0033] Another function of the mixing plate 50 is as a support for the injector 20. As shown in FIG. 10, the ammonia feed line 26 may come into the mixing chamber 22 from downstream of the mixing plate 50 and then passes through the plate to position the injector 20 at the chamber center. The plate 50, which is secured at several points to the canister wall 62, stabilizes the injector 20, via the ammonia feed line, which is otherwise secured at a single point.

[0034] It should be emphasized that the above-described embodiments of the present invention, particularly, any "preferred" embodiments, are possible examples of implementations merely set forth for a clear understanding of the principles for the invention. Many variations and modifications may be made to the above-described embodiment(s) of the invention without substantially departing from the spirit and principles of the invention. All such modifications are intended to be included herein within the scope of this disclosure and the present invention, and protected by the following claims.

CLAIMS

What is claimed is:

1. An injector for delivering a reductant into an engine exhaust stream, the injector comprising:

a body having an inlet fluidly coupled to a plurality of channels within the body;

a plurality of discharge ports, each port being fluidly coupled to at least one channel; and

a reductant feed line connected to the inlet of the body;

wherein the plurality of discharge ports are spaced one from another such as to optimize the dispersion of reductant from the ports throughout an engine exhaust stream.

2. The injector of Claim 1, wherein the engine exhaust stream is traveling perpendicular to a discharge direction of the reductant from the ports.

3. The injector of Claim 1, wherein the number of discharge ports is four.

4. The injector of Claim 3, wherein the ports are spaced approximately 90 degrees from one another.

5. The injector of Claim 3, wherein the body is shaped like a cross having four arms at the end of each of which is positioned a discharge port.

6. The injector of Claim 1, wherein the inlet is perpendicular to the plurality of channels.

7. The injector of Claim 1, wherein the reductant feed line positions the body within an engine exhaust stream.

8. The injector of Claim 1, wherein the engine exhaust stream is traveling parallel to a discharge direction of the reductant from the discharge ports.

9. The injector of Claim 8, further comprising a shroud shielding each of the discharge ports to prevent plugging of the ports.

10. The injector of Claim 8, further comprising a plurality of shrouds shielding each of the plurality of discharge ports.

11. An injector for delivering ammonia into an engine exhaust stream, the injector comprising:

a body having an inlet perpendicular and fluidly coupled to a plurality of channels within the body;

four discharge ports, each port being fluidly coupled to at least one channel; and

an ammonia feed line connected to the inlet of the body;

wherein the four discharge ports are spaced 90 degrees from one another.

12. The injector of Claim 11, wherein the body is shaped like a cross having four arms at the end of each of which is positioned a discharge port.

13. The injector of Claim 11, wherein the engine exhaust stream is traveling perpendicular to a discharge direction of the ammonia from the ports.

14. The injector of Claim 11, wherein the engine exhaust stream is traveling parallel to a discharge direction of the ammonia from the discharge ports.

AMENDED CLAIMS
received by the International Bureau on 04 June 2012 (04.06.2012)

What is claimed is:

1. An injector for delivering a reductant into an engine exhaust stream, the injector comprising:

a body having an inlet fluidly coupled to a plurality of channels within the body;

a plurality of discharge ports, each port being fluidly coupled to at least one channel; and

a reductant feed line connected to the inlet of the body;

wherein the plurality of discharge ports are spaced one from another such as to optimize the dispersion of reductant from the ports throughout an engine exhaust stream wherein the engine exhaust stream is traveling parallel to a discharge direction of the reductant from the discharge ports.

2. The injector of Claim 1, wherein the engine exhaust stream is traveling perpendicular to a discharge direction of the reductant from the ports.

3. The injector of Claim 1, wherein the number of discharge ports is four.

4. The injector of Claim 3, wherein the ports are spaced approximately 90 degrees from one another.

5. The injector of Claim 3, wherein the body is shaped like a cross having four arms at the end of each of which is positioned a discharge port.

6. The injector of Claim 1, wherein the inlet is perpendicular to the plurality of channels.

7. The injector of Claim 1, wherein the reductant feed line positions the body within an engine exhaust stream.

8. The injector of Claim 1, further comprising a shroud shielding each of the discharge ports to prevent plugging of the ports.

9. The injector of Claim 1, further comprising a plurality of shrouds shielding each of the plurality of discharge ports.

10. An injector for delivering ammonia into an engine exhaust stream, the injector comprising:

a body having an inlet perpendicular and fluidly coupled to a plurality of channels within the body;

four discharge ports, each port being fluidly coupled to at least one channel; and

an ammonia feed line connected to the inlet of the body;

wherein the four discharge ports are spaced 90 degrees from one another.

11. The injector of Claim 10, wherein the body is shaped like a cross having four arms at the end of each of which is positioned a discharge port.

12. The injector of Claim 10, wherein the engine exhaust stream is traveling perpendicular to a discharge direction of the ammonia from the ports.

13. The injector of Claim 10, wherein the engine exhaust stream is traveling parallel to a discharge direction of the ammonia from the discharge ports.

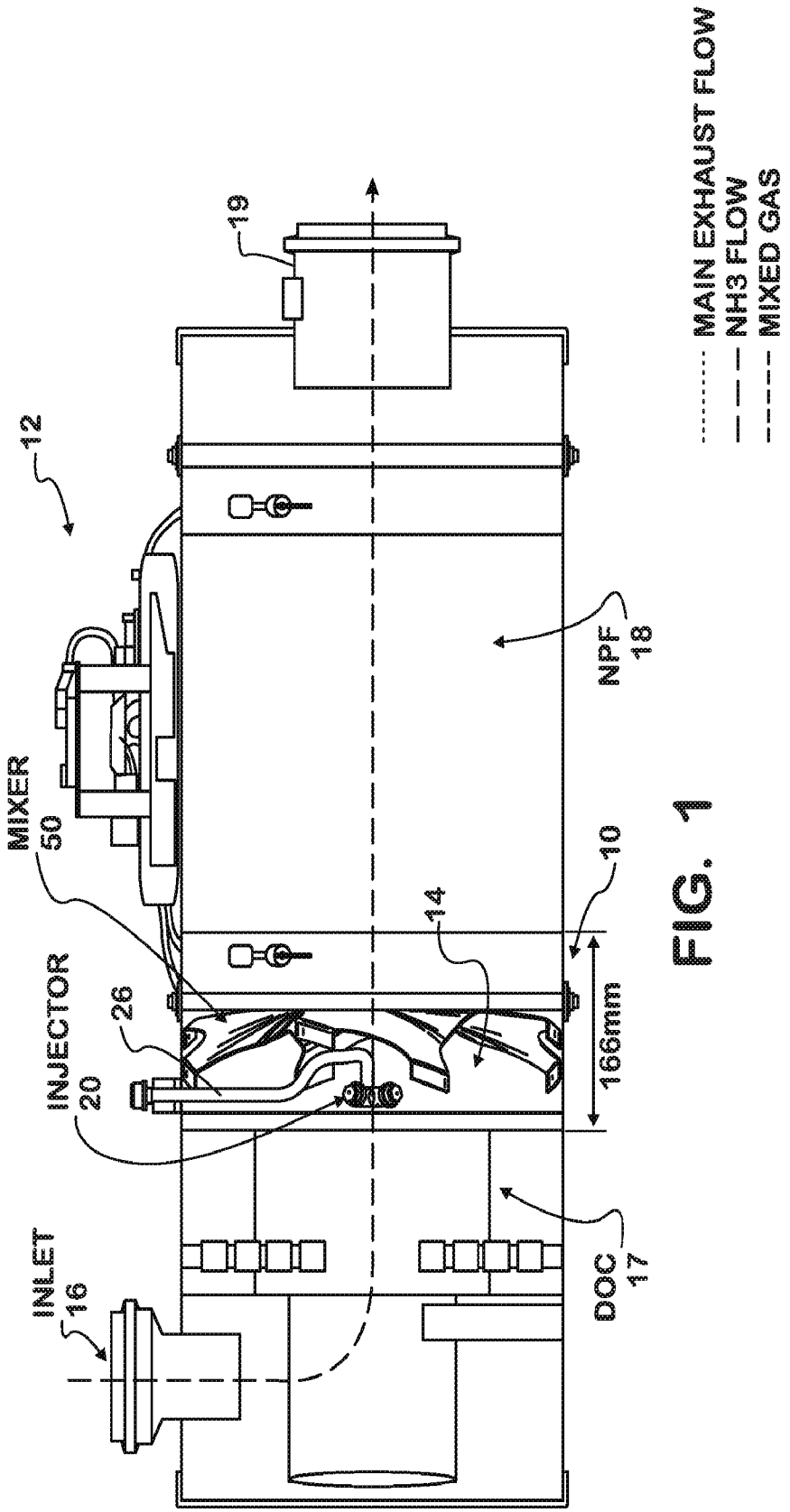
MAIN EXHAUST FLOW
NH3 FLOW
MIXED GAS
19
12
NPF
18
MIXER
50
10
14
INJECTOR
26
20
166mm
INLET
16
DOC
17

FIG. 1

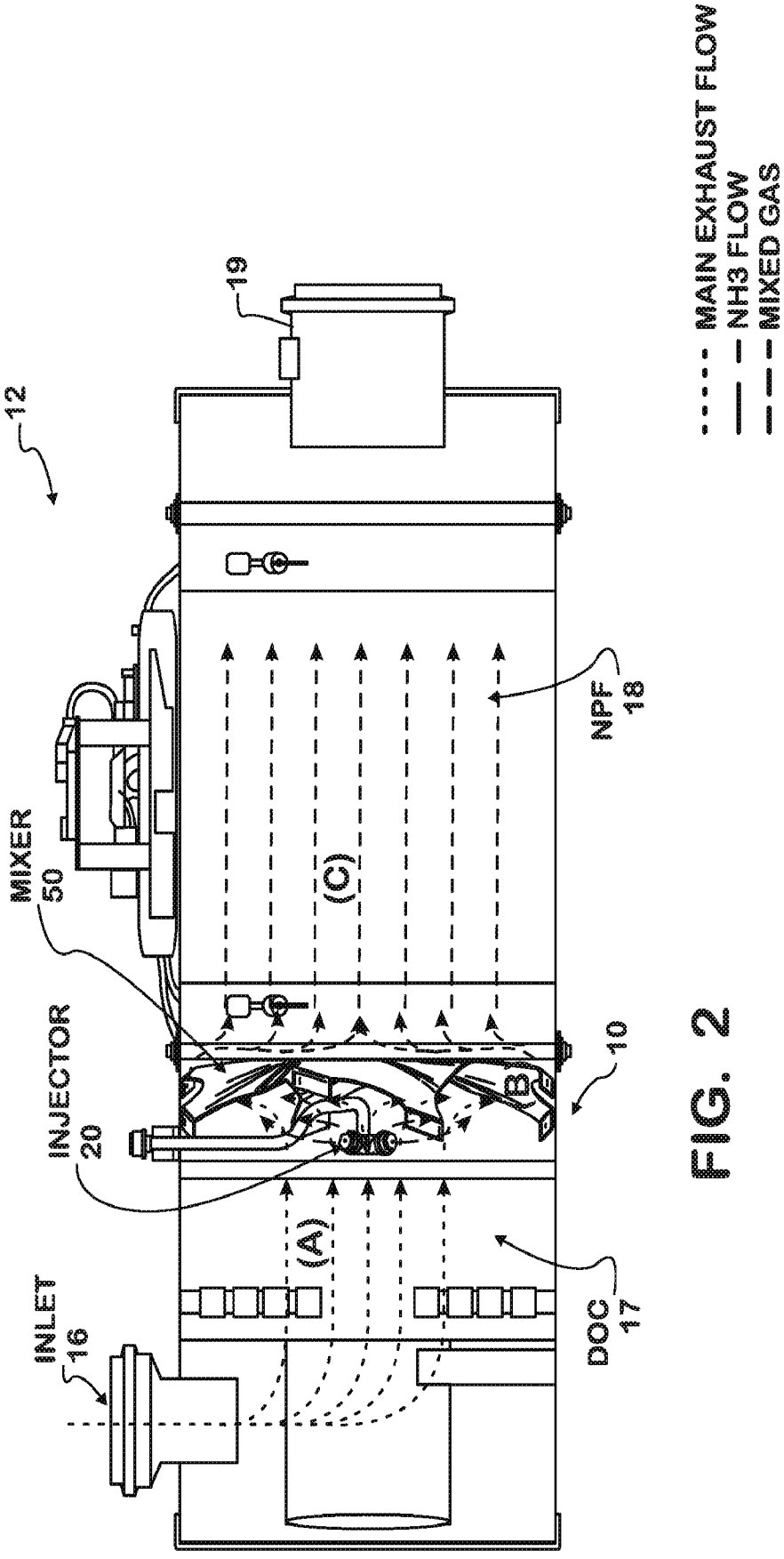
MAIN EXHAUST FLOW
NH3 FLOW
MIXED GAS
19
12
NPF
18
MIXER
50
(C)
INJECTOR
20
10
(A)
(B)
INLET
16
DOC
17

FIG. 2

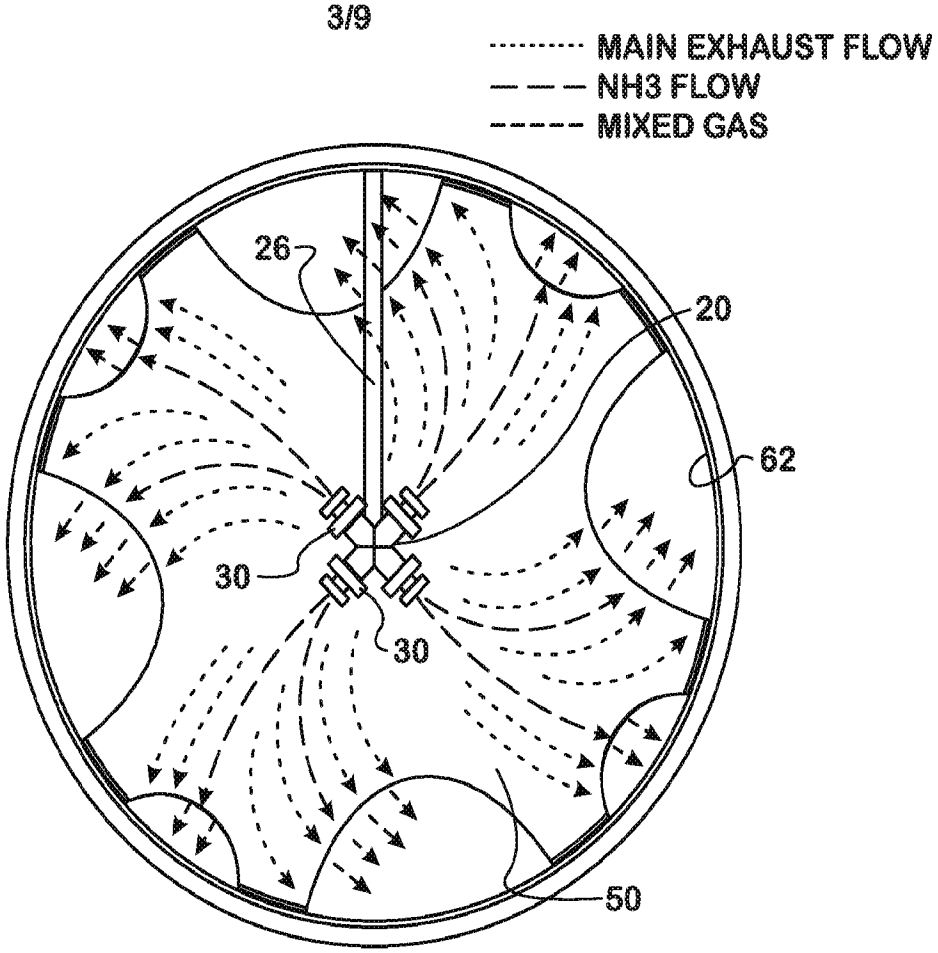
MAIN EXHAUST FLOW
NH3 FLOW
MIXED GAS
26
20
62
30
30
50

FIG. 3

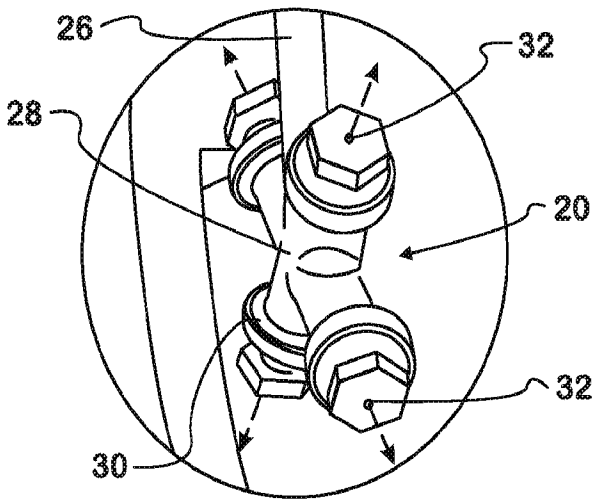
26
32
28
20
32
30

FIG. 4

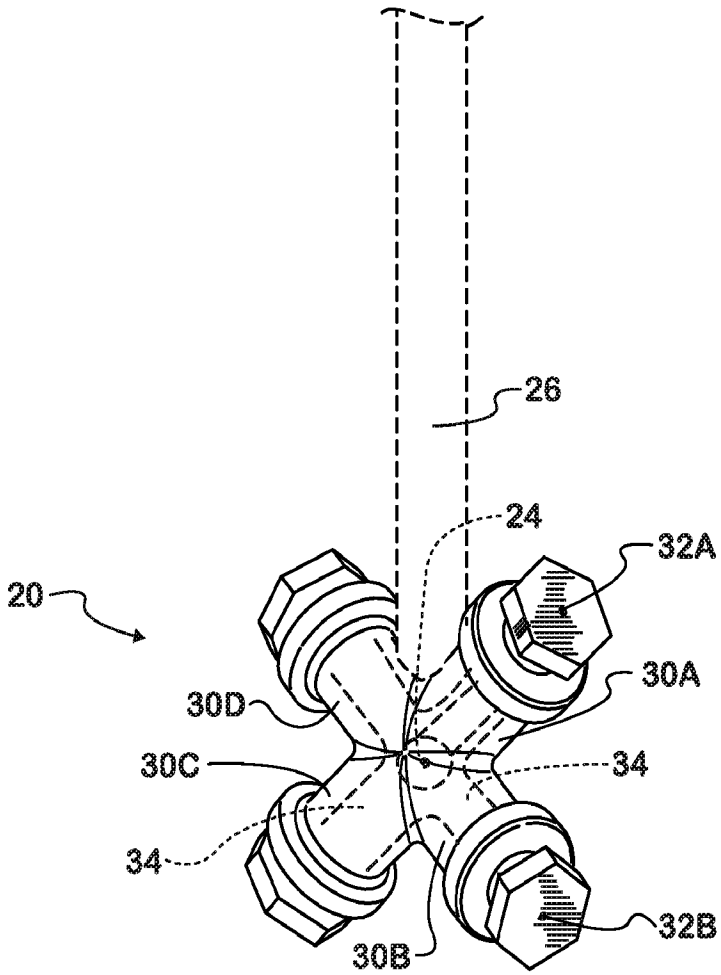

FIG. 5

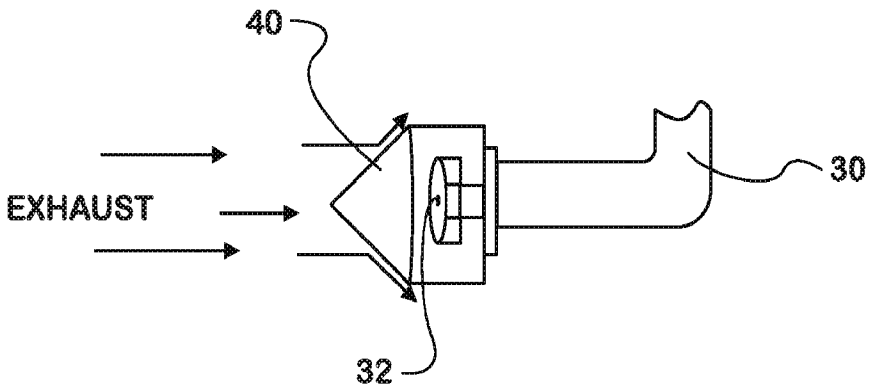

FIG. 6A

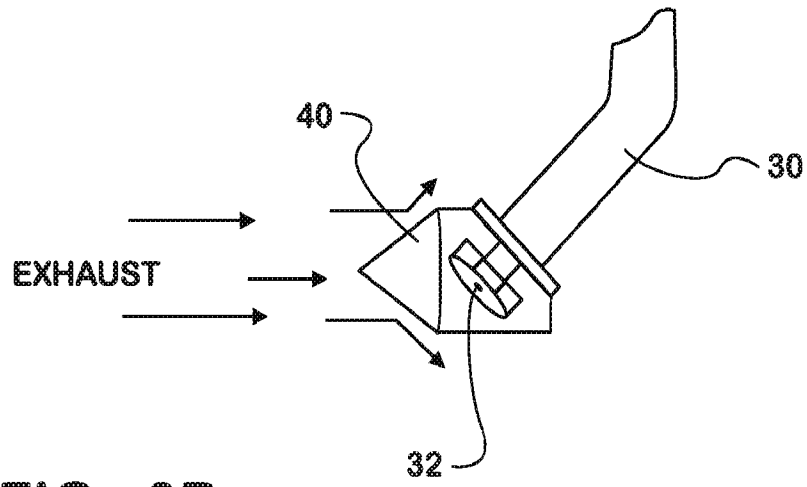

FIG. 6B

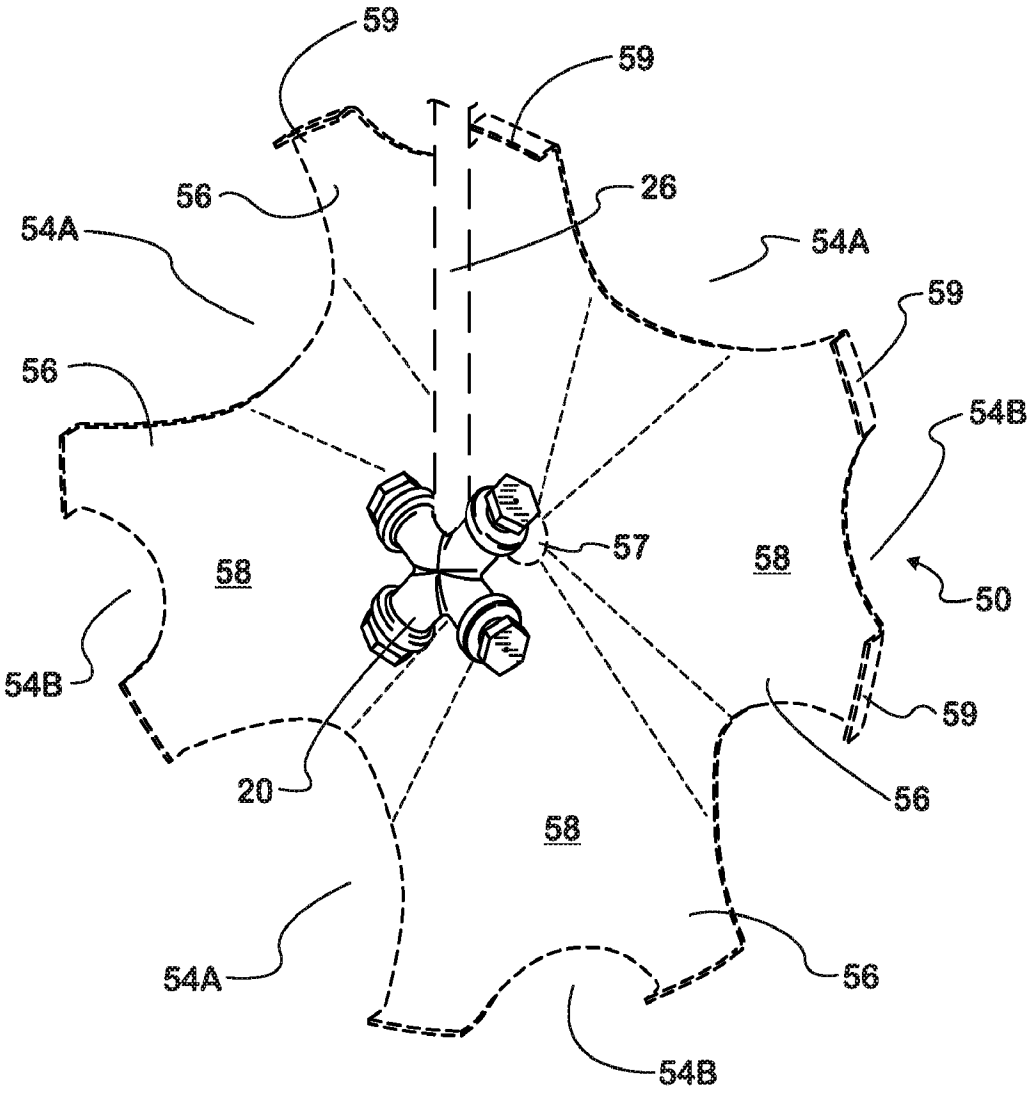

FIG. 7

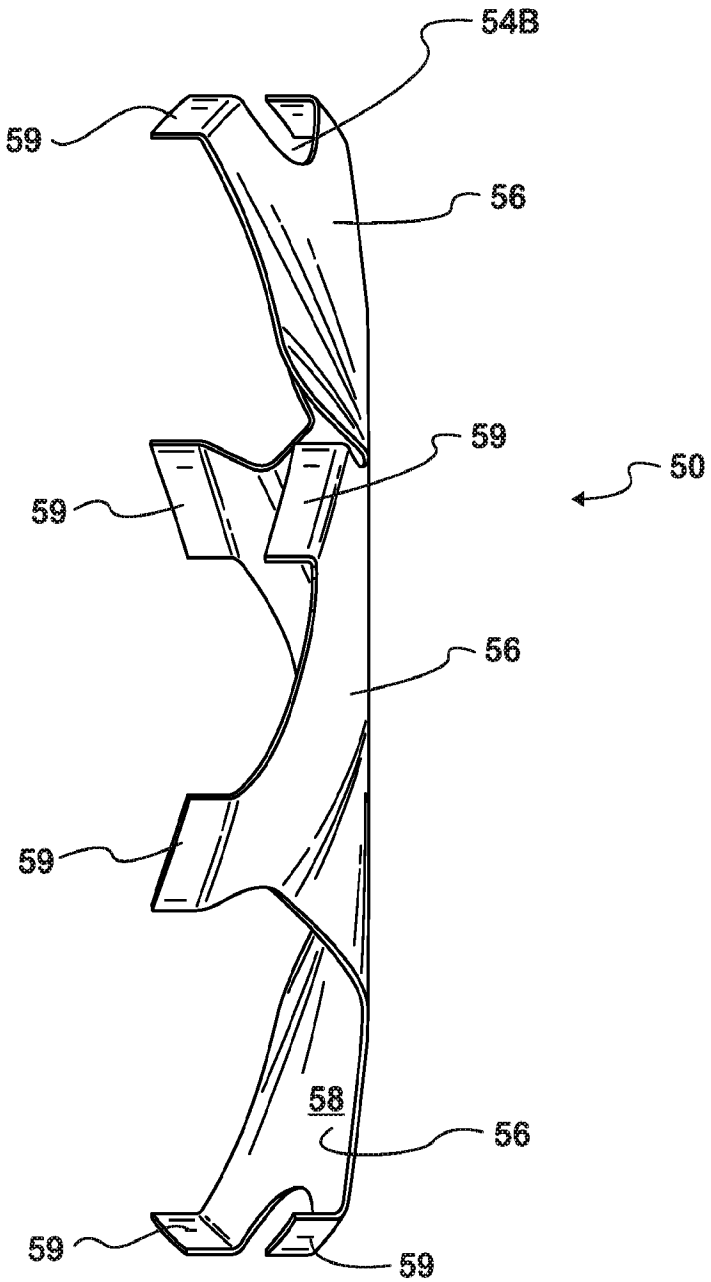

FIG. 8

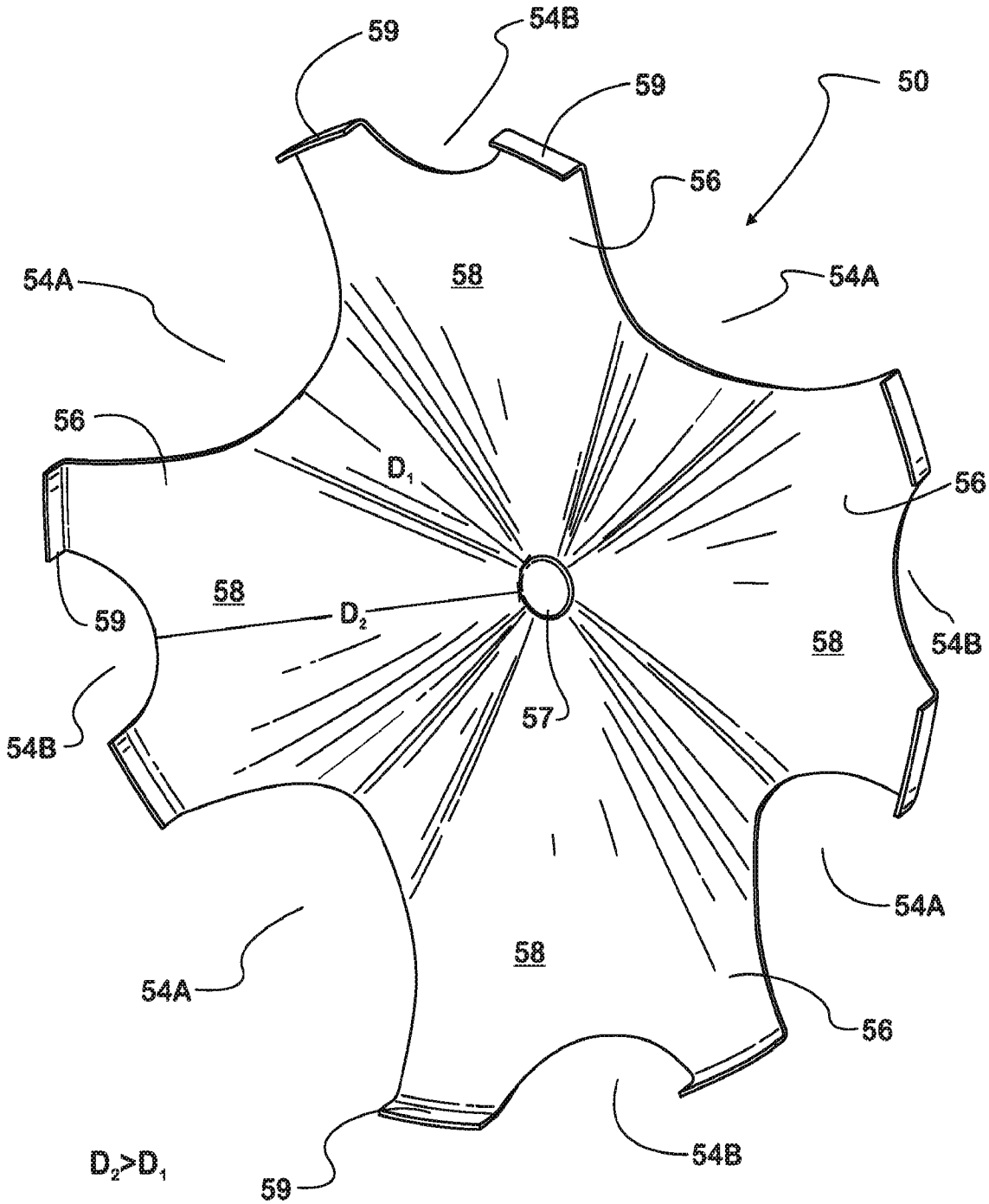
59
54B
59
50
56
54A
58
54A
56
D1
56
58
D2
59
58
54B
54B
57
54A
58
54A
56
D2>D1
59
54B

FIG. 9

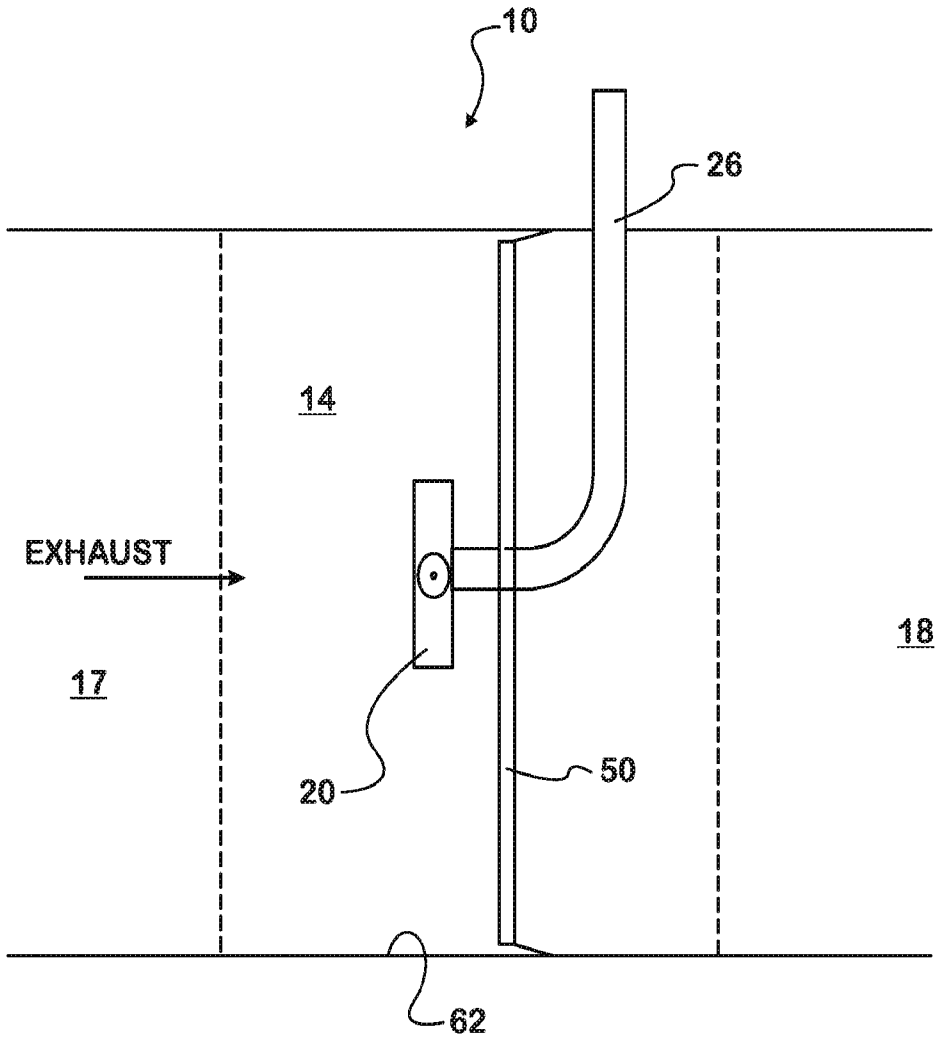

FIG. 10

INTERNATIONAL SEARCH REPORT

International application No.
PCT/US 12/22841

A. CLASSIFICATION OF SUBJECT MATTER
IPC(8) - F01N 3/24 (2012.01)
USPC - 60/282
According to International Patent Classification (IPC) or to both national classification and IPC

B. FIELDS SEARCHED

Minimum documentation searched (classification system followed by classification symbols)
USPC: 60/282

Documentation searched other than minimum documentation to the extent that such documents are included in the fields searched
USPC: 60/272, 273, 274, 282, 299, 301, 302 (text search - see terms below)

Electronic data base consulted during the international search (name of data base and, where practicable, search terms used)
PubWEST(USPT,PGPB,EPAB,JPAB); Google
Search Terms: reductant, reduce, inject, ports, nozzles, mixing, chamber, t-shape, four, exhaust, amonnia, aftertreatment

C. DOCUMENTS CONSIDERED TO BE RELEVANT

Category*	Citation of document, with indication, where appropriate, of the relevant passages	Relevant to claim No.
X --- Y	US 5,809,775 A (TARABULSKI et al.) 22 September 1998 (22.09.1998), entire document especially Fig 2; col 8, lns 41-67	1-2, 7 --- 3-6, 8-14
Y	US 6,088,934 A (NEWTON) 18 July 2000 (18.07.2000), entire document especially Figs 1-2; col 5, lns 62-65	3-5, 11-14
Y	US 2009/0277182 A1 (ENGELBRECHT et al.) 12 November 2009 (12.11.2009),entire document especially Fig 1	5-6, 8-10, 12, 14
Y	US 2009/0084094 A1 (GOSS et al.) 02 April 2009 (02.04.2009), entire document especially Fig 1	9-10

☐ Further documents are listed in the continuation of Box C. ☐

* Special categories of cited documents:
"A" document defining the general state of the art which is not considered to be of particular relevance
"E" earlier application or patent but published on or after the international filing date
"L" document which may throw doubts on priority claim(s) or which is cited to establish the publication date of another citation or other special reason (as specified)
"O" document referring to an oral disclosure, use, exhibition or other means
"P" document published prior to the international filing date but later than the priority date claimed
"T" later document published after the international filing date or priority date and not in conflict with the application but cited to understand the principle or theory underlying the invention
"X" document of particular relevance; the claimed invention cannot be considered novel or cannot be considered to involve an inventive step when the document is taken alone
"Y" document of particular relevance; the claimed invention cannot be considered to involve an inventive step when the document is combined with one or more other such documents, such combination being obvious to a person skilled in the art
"&" document member of the same patent family

Date of the actual completion of the international search	Date of mailing of the international search report
07 May 1012 (07.05.2012)	11 MAY 2012
Name and mailing address of the ISA/US Mail Stop PCT, Attn: ISA/US, Commissioner for Patents P.O. Box 1450, Alexandria, Virginia 22313-1450 Facsimile No. 571-273-3201	Authorized officer: Lee W. Young PCT Helpdesk: 571-272-4300 PCT OSP: 571-272-7774