(No Model.)

R. RABY.

THILL COUPLING.

No. 590,744. Patented Sept. 28, 1897.

Fig. 1

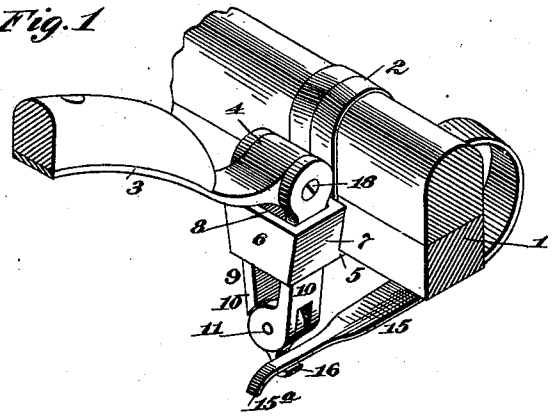

Fig. 2

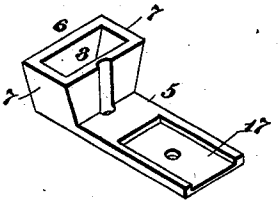

Fig. 3

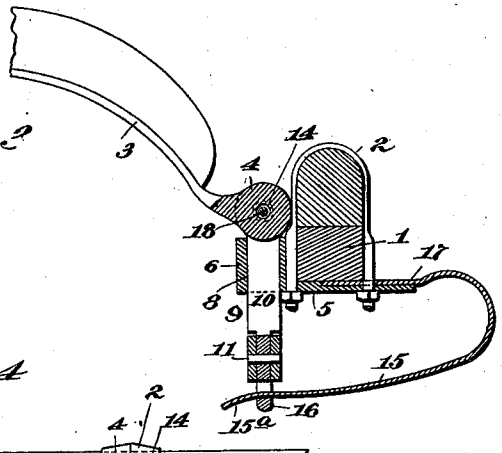

Fig. 4

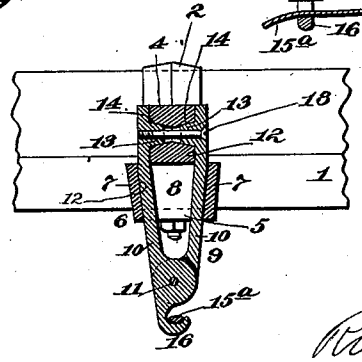

Witnesses.

J. F. Coleman

William E. Neff.

Inventor

Richard Raby

By Watson & Watson

Attys

THE NORRIS PETERS CO., PHOTO-LITHO., WASHINGTON, D. C.

UNITED STATES PATENT OFFICE.

RICHARD RABY, OF HARRISBURG, PENNSYLVANIA, ASSIGNOR TO D. L. BOUTON AND JAS. H. W. HOWARD, OF SAME PLACE.

THILL-COUPLING.

SPECIFICATION forming part of Letters Patent No. 590,744, dated September 28, 1897.

Application filed January 22, 1897. Serial No. 620,293. (No model.)

To all whom it may concern:

Be it known that I, RICHARD RABY, a citizen of the United States, residing at Harrisburg, in the county of Dauphin and State of Pennsylvania, have invented certain new and useful Improvements in Thill-Couplings, of which the following is a specification.

The object of the invention is to produce a thill-coupling of simple construction which will securely connect the thills to the axle and which will prevent rattling and take up wear in the thill-eye automatically.

To these ends the invention consists in various details of construction, which will be described in the following specification, reference being had to the accompanying drawings, in which—

Figure 1 is a perspective view illustrating the invention. Fig. 2 is a perspective view of the base-plate. Fig. 3 is a central sectional view on a plane at right angles to the axle, and Fig. 4 is a vertical section through the clevis on a plane parallel with the axle.

Referring to the drawings, 1 indicates the axle, 2 the clip for attaching the coupling to the axle, and 3 the thill-iron, having an eye 4. A base-plate 5 is firmly attached to the bottom of the axle by means of the clip 2. In front of the axle the base-plate has a box-shaped extension 6, the side walls 7 of which converge, forming a tapered socket 8. Within this socket fits a clevis 9, consisting of a pair of jaws 10, hinged together at their lower ends by means of a suitable pin or bolt 11. When the clevis is in position in the socket 8 the arms or jaws 10 fit the inclined walls 7 of the socket and the inner faces 12 are substantially parallel. Upon these inner faces are inwardly-projecting tapered journals 13, which fit the correspondingly-tapered opening 14 in the thill-eye. The clevis is held in the socket by means of a suitable spring 15, which, as shown, is attached to the base-plate in the rear of the axle and curves downward and forward, its free end 15^a engaging a hook 16 upon the lower end of the clevis, which hook is preferably integral with one of the arms of the clevis. As shown, the spring is flat and its rearward end fits in a socket or depression 17 in the rear end of the base-plate, the spring being clamped between the base-plate and the axle by means of the clip 2. A screw 18 passes freely through one arm of the clevis and is attached to the other arm, passing through the journals 13.

The operation is as follows: The thill is connected to the axle by opening the clevis, then passing the journals of the clevis into the eye of the thill, then dropping the clevis into the socket 8, and finally raising the end of spring 15 and lodging it in the hook 16. The spring draws the tapered arms of the clevis into the tapered socket, thus pressing the cone-shaped journals into the cone-shaped opening 14 in the thill-eye. The spring therefor not only prevents rattling of the thill, but also constantly urges the journals into the eye and takes up the wear automatically. The screw 18 connects the clevis-arms positively and prevents them from spreading, although it does not prevent them from being drawn together by the spring. It thus constitutes a safety device to prevent the thill from becoming accidentally detached without interfering with the operation of the thill, as above set forth.

It will be seen that my improved thill-coupling is adapted to be connected with any axle by means of the usual clip 2 and that thill-irons of the ordinary construction can be readily used by simply reaming out the ends of the eyes to taper the opening. The thill-coupling can therefore be manufactured and sold as an article separate from the vehicle. The spring may be permanently riveted or attached to the base, so that the parts of the coupling will be held together securely when they are detached from the wagon.

Having described my invention, what I claim, and desire to secure by Letters Patent, is—

1. The combination in a thill-coupling, of the base-plate having a tapering socket, the clevis having tapering jaws adapted to fit the socket and inwardly-projecting journals at the upper end of said jaws, and the spring connected with the base and arranged to draw the clevis into the tapering socket, substantially as described.

2. The combination in a thill-coupling, of the base adapted to be connected with an axle, the socket in the forward part of the base having inclined side walls, the clevis con-

sisting of a pair of inclined arms hinged together at their lower ends and provided with inwardly-projecting journals at their upper ends, the hook upon the lower end of the clevis and the spring arranged to constantly draw the clevis into the socket in the base-plate whereby the journals are urged toward each other, substantially as described.

3. In a thill-coupling the combination with the thill-iron having a tapered opening in its eye, of the hinged clevis having tapered journals adapted to fit said opening, means for pressing the journals of the clevis constantly into the thill-eye consisting of the tapered socket in which the clevis rests and the spring for drawing the clevis into the socket, and means for connecting the clevis to an axle, substantially as described.

4. In a thill-coupling the combination of the base-plate, adapted to be attached to an axle, the box-shaped extension upon said base-plate having a socket with inclined side walls, the clevis fitting said socket and provided with inwardly-projecting tapered journals, the thill-iron having an eye with a correspondingly-tapered opening, and a spring arranged to draw the clevis into the tapered socket in the base whereby the journals are constantly pressed into the thill-eye, substantially as described.

5. In a thill-coupling the combination with the base-plate having the box-shaped extension, the socket in said extension having inclined side walls, the clevis consisting of two correspondingly-inclined arms hinged together at their lower ends, journals upon the inner faces of said arms adapted to fit in the thill-eye, a screw passing through the journals and thill-eye, and means for continually drawing the clevis into the socket to compensate for wear and prevent rattling, substantially as described.

In testimony whereof I affix my signature in presence of two witnesses.

RICHARD RABY.

Witnesses:

JOSEPH H. GAITOR,

W. J. BAILEY.