(12) UK Patent Application (19) GB (11) 2 337 277 (13) A

(43) Date of A Publication 17.11.1999

(21) Application No 9826757.8

(22) Date of Filing 05.12.1998

(71) Applicant(s)
Hambleside Danelaw Limited
(Incorporated in the United Kingdom)
2-8 Bentley Way, Royal Oak Industrial Estate,
DAVENTRY, Northants, NN11 5QH, United Kingdom

(72) Inventor(s)
Norman J Pugh

(74) Agent and/or Address for Service
Hepworth Lawrence Bryer & Bizley
Bloxam Court, Corporation Street, RUGBY,
Warwickshire, CV21 2DU, United Kingdom

(51) INT CL^6
E04D 13/04

(52) UK CL (Edition Q)
E1D DDJ D120 D178 D2130 D401 D402

(56) Documents Cited
GB 2307922 A GB 2053307 A GB 1572986 A

(58) Field of Search
UK CL (Edition Q) E1D DDJ DF120
INT CL^6 E04D 13/04
Online: WPI

(54) Abstract Title
Support device for use with roof valley units

(57) A support device 10, for use with a roof valley unit to support a portion of a roof tile, comprising an upstanding portion 12 an upper portion 13 of which is adapted to receive said tile portion. The upstanding portion is secured to the roof valley unit by securing means 22 eg. glue, double sided sticky tape to define a spacer element between the tile portion and the roof valley unit.

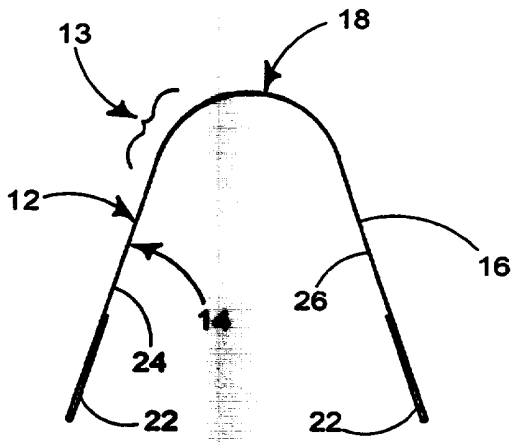

FIGURE 2b

GB 2 337 277 A

At least one drawing originally filed was informal and the print reproduced here is taken from a later filed formal copy.

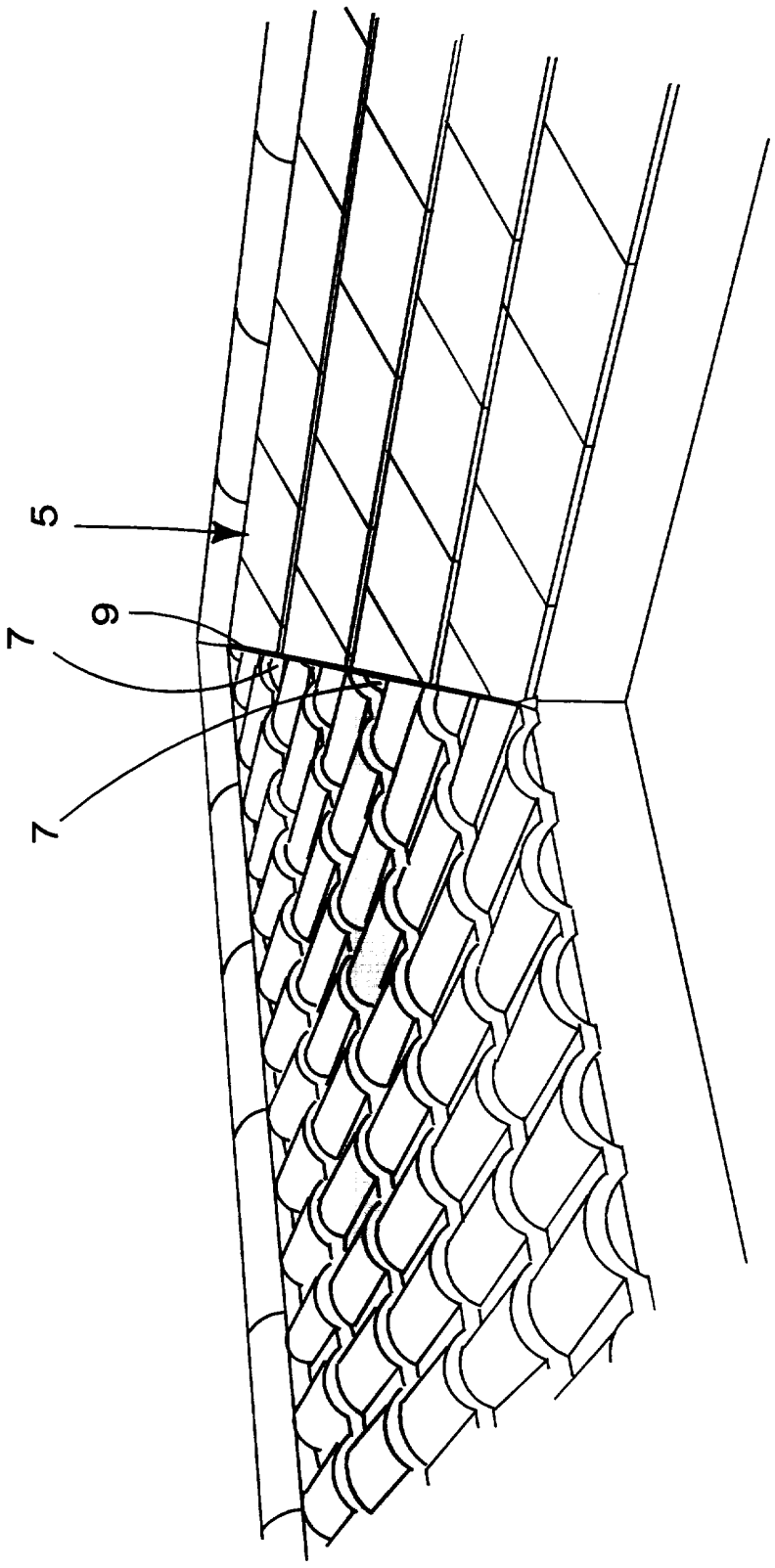

FIGURE 1

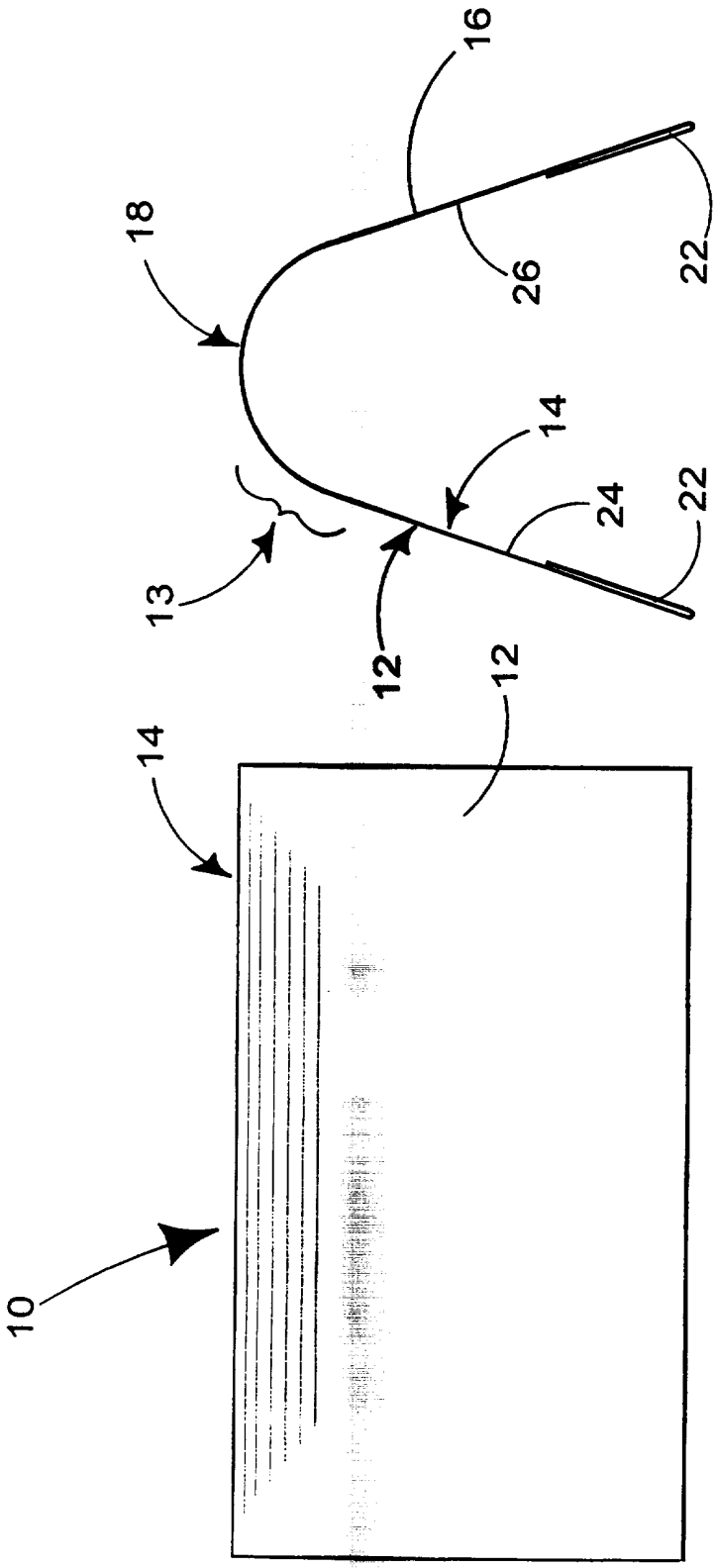

FIGURE 2a

FIGURE 2b

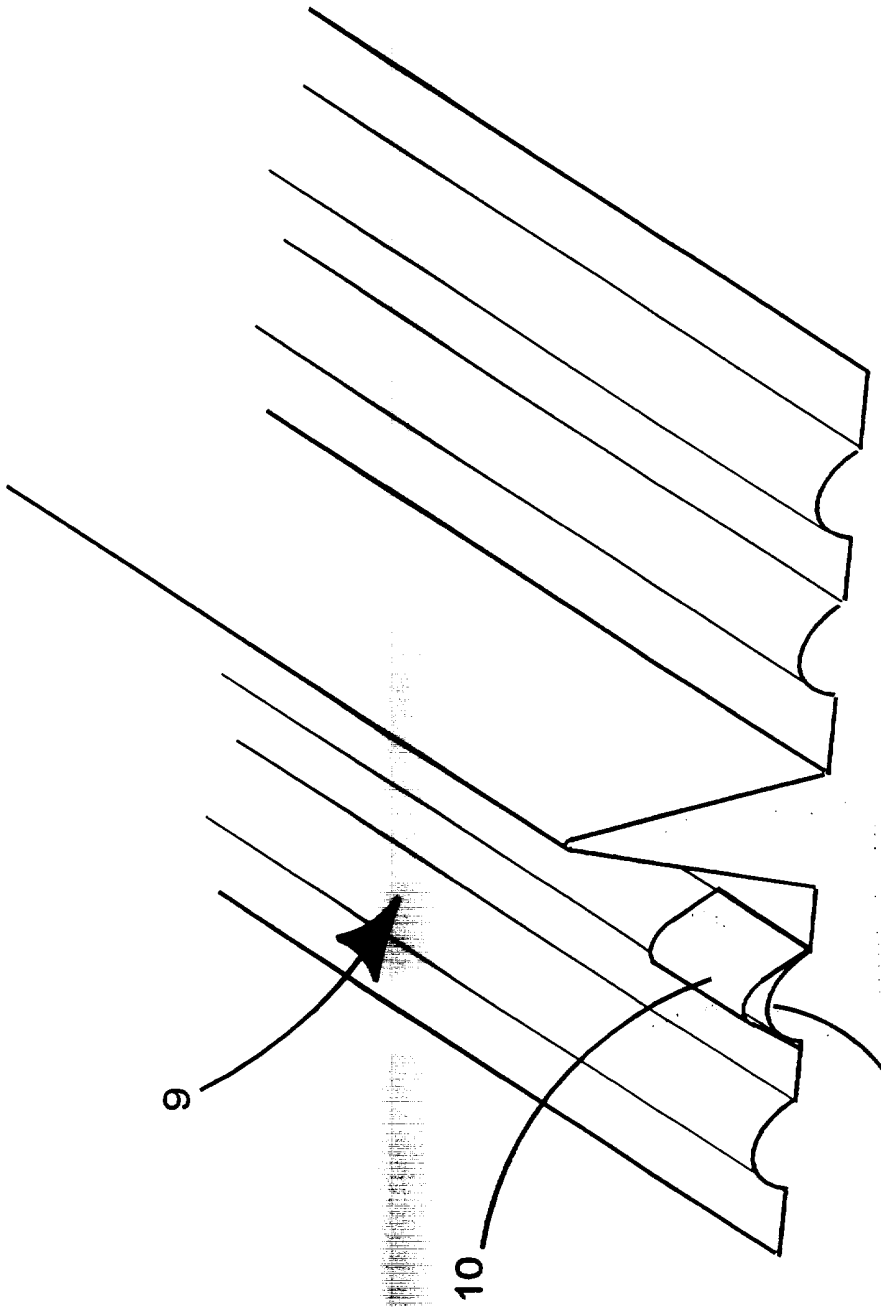

FIGURE 3

SUPPORT DEVICE FOR USE WITH ROOF VALLEY UNITS

The invention relates to a support device for use with installed roof valley units at valleys between pitched roof sections.

Many buildings have a roof consisting of a plurality of overlapping shingles or coverings, for example slates or tiles. The shape of the roof and the overlapping of the shingles provides suitable drainage for precipitation. Conventional roofs have a support frame comprising inclined rafters meeting together at a ridge and supported at their lower ends on wall plates. The lower ends of the rafters are frequently tied together by cross beams to define an "A" frame or truss. Adjacent trusses or "A" frames are spanned by transversely extending battens which constitute the immediate support for the roof cladding elements, which are typically secured to the battens by fixings, usually pins or nails, driven through the cladding elements into the battens. The pattern of fixing roof cladding elements from the ridge to the eave typically comprises rows of staggered shingles, generally offset by one half their width from adjacent overlying and underlying rows.

Where two pitched roof sections meet a valley is created at the intersection which cannot easily be covered with cladding. This valley must be made watertight. Conventially, this is done by laying a row of trough tiles up the valley and filling the gaps between the trough tiles and the edge shingles or coverings of the adjacent roof sections with cement mortar. The edge shingles have to be cut at an angle. In more recent times, one or more elongate strips of suitably formed plastics material, possibly reinforced with glass fibres, have been used instead of the trough tiles, but the gap between this material and the edge tiles still needs to be filled with cement mortar. Such elongate strips or troughs may have a generally V or U shaped cross-section and are commonly known as valley troughing strips.

The operation of filling the gaps with cement mortar is time-consuming and should not be performed in wet or frosty weather. It is unfortunately a common practice for excess mortar to be applied, resulting in spillage and possibly blocking of the trough.

It has therefore been much desired to construct valleys without using mortar (or "dry"), especially since all other roof areas can normally constructed without mortar. To that end, various proposals have been made for "dry" valley troughs. Valley troughs may be laid along the roof valley and attached to roof battens by pinning at their edges. Shingles are laid on top of the longitudinal edges of the valley trough. Thus some drainage and weather protection is provided at roofing section valleys. One example, GB 2 307 922 and owned by the applicant illustrates a suitable roof valley unit comprising lateral wing portions extending from respective sides of a longitudinally extending upstanding portion, each wing portion having a lateral margin in the form of a flat sheet area.

As described above, the shingles forming the edge of the valley have to be cut at an angle and therefore small cuts of tiles may need to be laid in order to provide a straight edge. Traditionally, these small cuts have been fixed to the roof valley by mortar but this approach is unsuitable for dry valley units. If the small cuts are not supported in place they can drop below the surface at the adjacent roof covering or be dislodged into the channel causing an obstruction which is undesirable.

The present invention and its preferred embodiment seeks to overcome or at least mitigate the problems of the prior art.

In one aspect of the invention, there is provided a support device for use with a roof valley unit to support a portion of a roof tile, the support device comprising an upstanding portion, an upper part of which upstanding portion is adapted to receive said tile portion wherein the upstanding portion is secured to the roof valley unit, to define a spacer element between the tile portion and the roof valley unit.

According to an optional feature of this aspect of the invention, the upstanding portion may comprise opposed walls interconnected at an apex forming said upper part.

Preferably, the apex is capable of being flexed and the opposed walls are so constructed to grip onto a protruding part of the roof valley unit.

According to another optional feature of this aspect of the invention, there may be provided means to fix the support structure to the roof valley unit, the fixing means comprising a layer of glue applied to the inner surfaces of said opposed walls.

Preferably the apex is at least 2cm above the lower edges of the opposed walls. More preferably the apex is about 3½cm above the lower edges of the opposed walls.

In one class of embodiments, the support devices may be formed from galvanised steel.

The present invention is further described, by way of example, only with reference to the accompanying drawings, in which:

FIGURE 1 illustrates a roof valley unit in use and a roof structure;

FIGURE 2a and 2b are side and end elevational views of the support structure according to one embodiment of the invention; and

FIGURE 3 is a perspective view of a roof valley unit of the invention incorporating a support structure of the invention.

In Figure 1, there is shown a roof valley unit in use, which illustrates the edge shingles 5 cut at an angle and small cuts of tiles 7 abutting the roof valley unit 9. Commonly, small cuts of tiles would need to be supported on the left hand side of the roof valley shown in Figure 1, because the interlock is from the top so no support is provided.

The small cuts of tile 7 are held in place by a support structure (or device) 10 of the invention and one embodiment illustrated in Figures 2a and 2b. There comprises an upstanding portion 12, an upper part 13 of which upstanding portion is adapted to receive the small cut of tile 7. The upstanding portion 12 is secured to the roof valley

unit 9 to define a spacer element between the tile and the roof valley unit. In one class of embodiments, the upstanding portion 12 comprises of opposed walls 14, 16 interconnected at an apex 18 forming the upper part 14. Preferably, the opposed walls are shaped to be placed over a protruding portion 20 of roof valley unit, as shown in Figure 3 and are secured thereto by securing means 22. In other embodiments, the support structure could be a unitary elongate member with suitable attachment means to attach the device to the valley unit. In the illustrated embodiment, the support device is made of galvanised steel, although it can be manufactured from, other suitable materials, for example, flexible plastics material which is desirably fibre reinforced when it is desired to provide a device that can flex. Optionally, the unit can be made of glass reinforced polyester.

In order to secure the support device to the roof valley unit, attachment or securing means 22 may be placed by glue or double sided sticky tape, which in the illustrated embodiment is provided on the inner surfaces 24, 26 of the opposed walls 14, 16. Additionally or alternatively, the attachment means may be a clip or gripping device that is connected to or integral with the upstanding portion. For example, the opposed walls 14, 16 could be flexed apart when introduced to the protruding portion of the unit to be held in place by a gripping action of the flexed walls.

For a tile roof, it is preferred for the upstanding portion 12 to have a height (H) between the apex and the lower edges of the opposing walls of about 3½cm. Of course, the height can be altered during manufacturing according to the type of shingle being used. For example, the small cuts of a tile roof with thicker shingles the upstanding portion would be reduced in height. In some embodiments, the support device is stackable. By stacking two or more devices the spacing between the tile and valley unit can be increased. It is envisaged the upstanding portion can be supplied in pre-cut lengths, for example 50mm in the illustrated embodiment, or can be supplied in one standard length to be cut to the desired size *in situ*.

The support device 10 is fitted to the roof valley unit by placing it over a protruding part 20 of the roof valley unit, as shown in Figure 3. Thereafter, the small cut of tile 7

is fixed to a roofing baton, as is well known, and the support structure 10 is moved into position to support a lower portion of the cut tile and is secured to the unit thereby to provide a spacer element between the roof valley unit and the tile.

Thus, the small cuts of shingles are applied, to the roof so as to be juxtaposed the upstand of the valley unit 9 and are prevented from being dislodged into one or more of the channels by the supporting device of the present invention.

In trials, it has been proved that the invention enables provision of a support structure which is effective in allowing drainage of roof valleys without any noticeable water entering the structure of the roof, whilst maintaining the tiles *in situ*. Thus, not only can the valley unit function properly, but also the unit lacks the debris traps caused by small cuts of tiles interfering with the water channels.

The support structure should be universal in its application so that it will fit variable roof valley units and adapt to various roof coverings.

CLAIMS

1. A support device for use with a roof valley unit to support a portion of a roof tile, the support device comprising an upstanding portion, an upper part of which upstanding portion is adapted to receive said tile portion wherein the upstanding portion is secured to the roof valley unit, to define a spacer element between the tile portion and the roof valley unit.

2. The support device as claimed in claim 1 wherein the upstanding portion comprises opposed walls interconnected at an apex forming said upper part.

3. The support device as claimed in claim 2 wherein the apex is capable of being flexed and the opposed walls are so constructed to grip onto a protruding part of the roof valley unit.

4. The support device as claimed in claim 2 or claim 3 further comprising means to fix the support structure to the roof valley unit, the fixing means comprising a layer of glue applied to the inner surfaces of said opposed walls.

5. The support device as claimed in any of claims 2 to 4 wherein the apex is at least 2cm above the lower edges of the opposed walls.

6. The support device as claimed in any of claims 2 to 4 wherein the apex is about 3½cm above the lower edges of the opposed walls.

7. The support device as claimed in any preceding claim formed from galvanised steel.

8. The support device as claimed in any preceding claim which is stackable.

9. The support device substantially as herein before described by reference to or as illustrated in Figure 2a or Figure 2b.

10. The use of a roof valley unit of any of claims 1 to 9 to support a small cut of tile adjacent a roof valley unit.

Application No:	GB 9826757.8	**Examiner:**	Rachel Foxon
Claims searched:	1-10	**Date of search:**	22 March 1999

Patents Act 1977
Search Report under Section 17

Databases searched:

UK Patent Office collections, including **GB**, EP, WO & US patent specifications, in:

UK Cl (Ed.Q): E1D (DDJ), (DF120)

Int Cl (Ed.6): E04D 13/04

Other: Online: WPI

Documents considered to be relevant:

Category	Identity of document and relevant passage		Relevant to claims
A	GB 2307922	Hambleside Danelaw Limited	-
X	GB 2053307	P.G. Clayphan (pg 1 line 112-pg 2 line 2)	1,7
A	GB 1572986	F. Fellner (fig 5)	-

X	Document indicating lack of novelty or inventive step	A	Document indicating technological background and/or state of the art.
Y	Document indicating lack of inventive step if combined with one or more other documents of same category.	P	Document published on or after the declared priority date but before the filing date of this invention.
&	Member of the same patent family	E	Patent document published on or after, but with priority date earlier than, the filing date of this application.