June 20, 1933. F. R. LABIN 1,914,438

TOY

Filed April 14, 1932

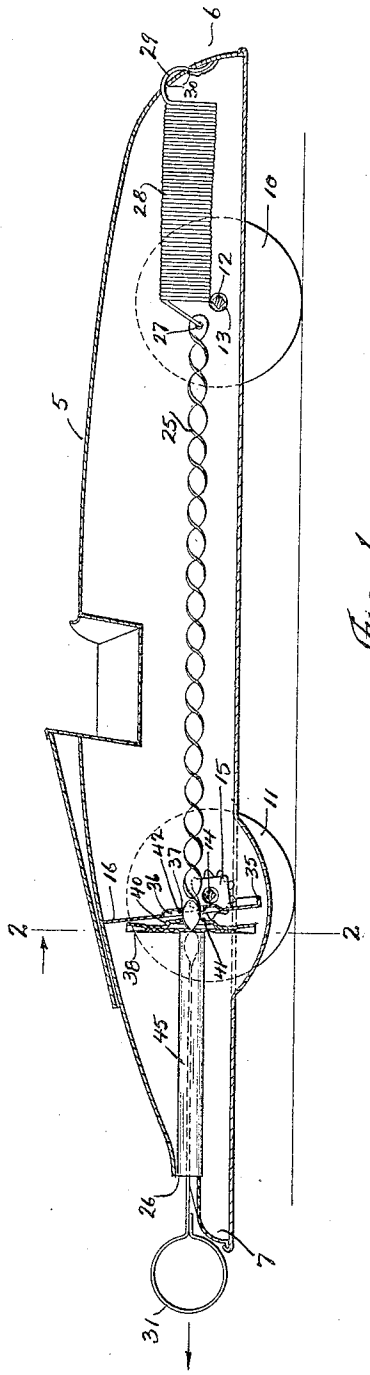

Fig. 1.

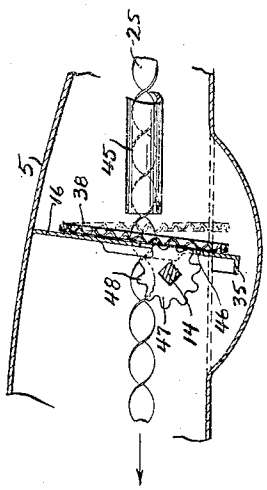

Fig. 3.

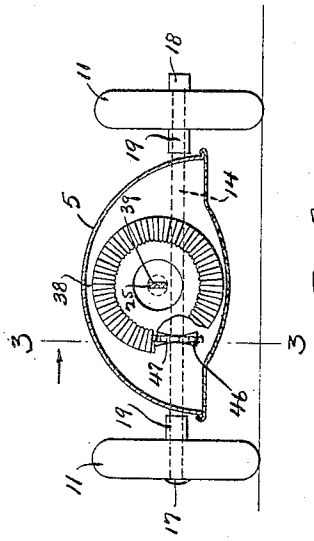

Fig. 2.

INVENTOR
FRANK R. LABIN
By J. Wm. Ellis
ATTORNEY

Patented June 20, 1933 1,914,438

UNITED STATES PATENT OFFICE

FRANK R. LABIN, OF BUFFALO, NEW YORK

TOY

Application filed April 14, 1932. Serial No. 605,235.

My invention relates in general to toys of the type which are propelled by a spring motor, and in particular to an efficient and inexpensive motor for such a toy.

The principal object of my invention has been to provide a motor for such a toy which shall be wound up by pulling a helically formed rod.

Another object has been to provide a motor of this type which shall automatically disconnect the driving mechanism from the driven mechanism when the motor is run down, thus allowing the toy to coast.

Moreover, my device is inexpensive to manufacture, and of such a nature that it shall stand considerable rough usage.

The above objects and advantages have been accomplished by the device shown in the accompanying drawing, of which:

Fig. 1 is a side, sectional elevation of the complete toy.

Fig. 2 is an end sectional elevation, taken on line 2—2 of Fig. 1.

Fig. 3 is an enlarged, fragmentary, sectional elevation of portions of the motor, taken on line 3—3 of Fig. 2.

The herein described motor may be adapted to drive any self-propelled toy, and for clearness of illustration, I have shown it adapted to the propulsion of a toy automobile.

In the drawing, therefore, 5 represents the body of the automobile, which is shaped to simulate a racing car, the end 6 being at the front of the car and the end 7 being at the rear thereof. Front wheels 10 are provided, one at each side of the car, and two rear wheels 11 are also provided. The front wheels are mounted upon a shaft 12 of square shaped cross-section, which is journaled in holes 13 formed in the body of the car. The rear wheels 11 are mounted upon a shaft 14 also of square shaped cross-section, and this shaft passes through suitable holes in the body and also has bearing contact with apertured tabs 15 which form a part of the partition 16 arranged immediately at the rear of the rear shaft 14. As clearly shown in Fig. 2 the shafts pass through the wheels, a head 17 being formed at one end and a deformed or flattened portion 18 at the other end, whereby the wheels are kept in position upon the shafts. Spacer sleeves 19 are preferably placed between the inner faces of the wheels, and the side walls of the body 5, whereby the wheels are kept in spaced relation with the body and are prevented from striking the edges of the same.

Passing longitudinally through the body is a helical propeller rod 25 which is extended inwardly from the rear end 7 of the body and through a suitable aperture 26 formed therein. This rod is made of flat material and is twisted so as to be helical in form. The front end is provided with an aperture 27 which engages with one end of a helical propeller spring 28 arranged in the front end of the body. The opposite end 29 of the spring is passed through apertures 30 in the front end 6 of the car, the extreme end of the wire of the spring being secured in place by soldering. The back end of the rod is provided with a ring 31 by which it may be grasped by the finger and drawn out of the body against the tension of the spring 28. This ring may be formed by bending the material and securing the extreme end to the body of the rod by welding or otherwise.

The partition 16 which is secured to the inside of the body is provided at its lower free edge with a reinforcing flange 35 which stiffens the partition. At the central portion of the partition there is formed a forwardly extending, circularly shaped recess 36 in the center of which is formed an aperture 37, large enough to permit the passage of the helical rod 25.

Mounted on the helical rod, and arranged to the rear of the partition 16, is a drive gear 38. This gear is provided with a centrally arranged slot 39 which fits the cross-sectional area of the helical rod, which passes through it. The drive gear on the face which is adjacent the circular recess 36 of the partition is provided with a circularly shaped boss 40 which fits into the recess 36 when the gear is drawn toward the partition and forms a bearing for the gear while it is rotating during the inward stroke of the helical rod 25. The

boss is provided at its center preferably with a raised portion 41 which engages with an inturned edge 42 formed at the rim of the hole 37 formed in the partition 16. The engagement of the raised portion 41 of the gear with the inturned rim 42 of the partition forms a ring bearing for the gear which greatly reduces the friction during the driving stroke of the rod, thus increasing the effective power produced by the propeller spring.

A spacing tube 45 is mounted upon the helical rod 25 and extends from the opening 26 in the rear end of the body to substantially the position where it will contact the drive gear when in the position shown in Fig. 1. This spacer prevents the gear from running back on the rod when the rod reaches the end of its inward movement, thus preventing lost motion when the rod is again pulled out to wind up the motor.

As clearly shown in Fig. 1 the drive gear will hang in a substantially vertical plane when the helical rod 25 is in its innermost position, or it may hang slightly away from the partition 16 at its lower side. The partition 16 is preferably inclined away from the bottom edge of the gear, as shown in Figs. 1 and 3, so that when the rod has reached the position just mentioned, the gear will be released from engagement with the rear face of the partition.

The drive gear 38 is preferably formed on its face with a series of radially extending corrugations which form gear teeth. The partition 16 is formed at one side of the center of the gear and opposite the corrugated portion thereof and with a slot 46. The sides of the slot, as shown in Fig. 2, are somewhat curved so as to reduce the friction upon the driven gear 47 which is mounted upon the shaft 14 and has its toothed periphery extending through the slot 46 where it is engageable with the teeth of the drive gear 38 when the same is moved over toward and in contact with the partition 16. The driven gear 47 is arranged askew of the drive gear 38, but the teeth 48 of the driven gear are preferably slightly rounded so that they may engage the corrugations of the driven gear without binding or undue friction.

From the foregoing it will be clear that when the helical rod 25 is drawn backwardly to the full length of its travel, the helical spring 28 will be stretched out until its rear end reaches the partition 16. When the rod is now released the operating spring will draw the rod inwardly. The first inward movement of the rod 25 will serve to carry the drive gear 38 in contact with the partition 16, thus bringing its corrugations into engagement with the teeth 48 of the driven gear 47. Since the rod 25 is not rotatable, the screw action by reason of its helical form, when it is passing through the slot 39 of the driven gear will cause the rotation of this gear. So long as there is tension upon the spring and the rod 25 is moving forwardly, the drive gear will be rotated and will be held in contact with the driven gear, thus serving to drive the wheels 11 of the car and propel the same. Just as soon, however, as the operating rod 25 has reached the forward end of its travel and thereby comes to a stop, the drive gear 38 will be instantly moved out of contact with the partition and out of mesh with the driven gear 47, thereby allowing the car to be further propelled under its momentum. The drive gear will be so moved out of contact with the driven gear by the momentum of the driven gear when the axial movement of the rod comes to a stop. Such momentum will cause the gear to travel along the screw of the rod 25 in a direction away from the partition, thereby creating clearance space between this gear and the driven gear. The inclined position of the partition 16, and, therefore, the drive gear in its operative position, will assist the gear to fall away from its driving position by gravity. A limited movement only of the drive gear along the rod is permitted because of the spacing sleeve 45, which brings rearward travel of the gear to a stop. The spacing tube also serves to keep the drive gear in substantially the position shown in Fig. 1 when the helical rod 25 is being drawn backwardly in the act of winding the motor. The motor does not have to be completely wound, and the slightest forward movement of the rod will cause the drive gear to be drawn immediately into engagement with the driven gear and thus impart to the wheels any power stored up in the spring by reason of its expansion. As above pointed out immediately upon stoppage of the forward movement of the helical rod 25, the drive gear is released.

Obviously, some modifications of the details herein shown and described may be made without departing from the spirit of my invention or the scope of the appended claims, and I do not, therefore, wish to be limited to the exact embodiment herein shown and described, the form shown being merely a preferred embodiment thereof.

Having thus described my invention, what I claim is:

1. A motor for toys comprising a helical operating rod, resilient means for causing said rod to move axially, a body for the toy, a partition carried by the body and formed with an aperture for the passage of the rod, a drive gear mounted upon the rod and having a limited amount of axial movement on said rod, and a driven gear disposed in the partition and engaged by the drive gear when the rod is moving through its power stroke.

2. A motor for toys comprising a helical operating rod, resilient means for causing said rod to move axially, a drive gear mounted

upon the rod and caused to rotate when the rod is moved axially, a driven gear, said drive gear being movable axially on said rod for engagement and disengagement with the driven gear, and a spacing tube mounted upon the helical rod for limiting the rearward axial movement of the drive gear.

3. A motor for toys comprising an axially movable, helical operating rod, resilient propelling means connected to the rod, means carried by the rod for manually operating the same to place said propeller means in position for its power stroke, a drive gear mounted upon and engageable with the rod, and a driven gear, said drive gear being loosely mounted, whereby said gears are engaged when the operating rod is moved through its power stroke and are disengaged when the rod has completed such stroke.

4. A motor for toys comprising an axially movable, helical operating rod, resilient propelling means connected to the rod, means carried by the rod for manually operating the same to place said propeller means in position for its power stroke, a drive gear mounted upon and engageable with the rod, and a driven gear, said drive gear being axially movable a limited distance upon the rod, whereby it will alternately engage and disengage the driven gear.

5. A motor for toys comprising a helical operating rod, resilient means for causing said rod to move axially, a body for the toy, a partition carried by the body and formed with an aperture for the passage of the rod, an axially movable drive gear mounted upon and engageable with the rod, said drive gear being located adjacent to the partition, and a driven gear disposed in the partition and engaged by the drive gear when the rod moves through its power stroke, the partition and drive gear being formed with bearing surfaces, whereby the gear will be supported during its driving movement.

6. A motor for toys comprising a helical operating rod, resilient means for causing said rod to move axially, a body for the toy, a partition carried by the body and formed with an aperture for the passage of the rod, an axially movable drive gear mounted upon and engageable with the rod, said drive gear being located adjacent to the partition, a spacing tube mounted upon the helical rod for limiting the rearward movement of the drive gear, and a driven gear disposed in the partition and engaged by the drive gear when the rod moves through its power stroke, the partition and drive gear being formed with bearing surfaces, whereby the gear will be supported during its driving movement.

7. A motor for toys comprising a helical operating rod mounted to move axially, a body for the toy, a propelling spring carried by the body and connected to the inner end of the rod, a partition carried by the body and having an opening for the passage of the rod, said partition being inclined at its lower edge toward the spring, a loosely mounted drive gear engageable with the helical rod, and a driven gear carried by the body and engaged by the drive gear only when the rod is moved through its power stroke.

8. As an article of manufacture, a toy comprising a body, axles rotatably mounted in the body, wheels carried by the axles, a fixed gear carried by one of the axles, an axially movable gear arranged adjacent the fixed gear, means for limiting the axial movement of the movable gear, and helical propelling means carried by the body and engageable with the movable gear, whereby the gears will mesh only when the propelling means are active.

9. As an article of manufacture, a toy comprising a body, axles rotatably mounted in the body, wheels carried by the axles, a partition carried by the body, a fixed driven gear non-rotatably mounted on one of the axles and having its periphery projecting through the partition, a loosely mounted drive gear disposed on the side of the partition opposite to the driven gear, means for limiting the rearward movement of the drive gear, a helical, axially movable operating rod engageable with the drive gear and resilient means for moving said rod through its power stroke.

In testimony whereof, I have hereunto signed my name.

FRANK R. LABIN.