Dec. 25, 1951 A. C. FISCHER 2,580,163

NONEXTRUDING EXPANSION JOINT

Original Filed Oct. 28, 1943 2 SHEETS—SHEET 1

Fig. 2.

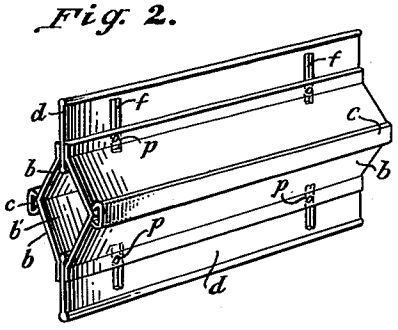

Fig. 1.

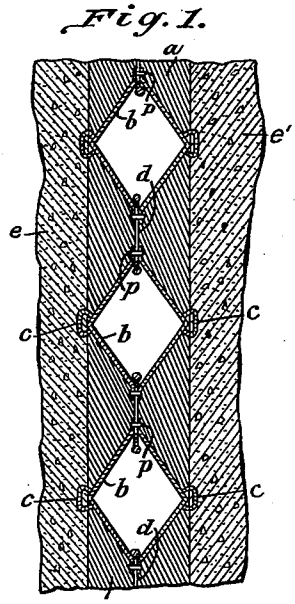

PLASTIC OR BITUMINOUS MATERIAL

Fig. 3.

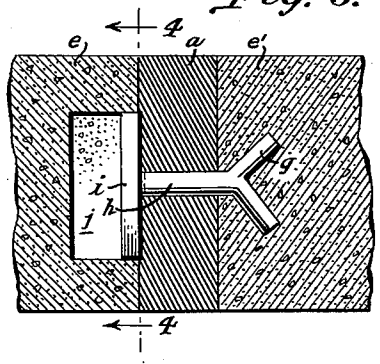

Fig. 4.

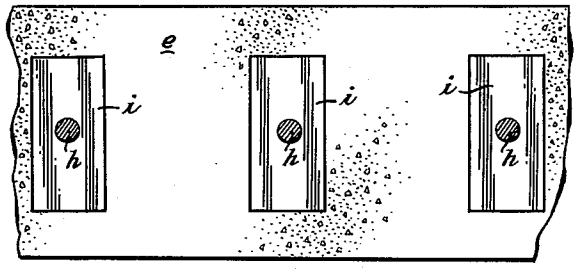

INVENTOR.
ALBERT C. FISCHER

BY
Albert F. Robinson
· ATTORNEY

Dec. 25, 1951 A. C. FISCHER 2,580,163

NONEXTRUDING EXPANSION JOINT

Original Filed Oct. 28, 1943 2 SHEETS—SHEET 2

Fig. 5.

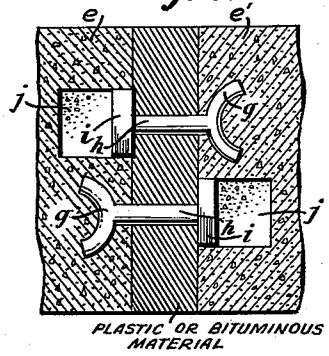

Fig. 6.

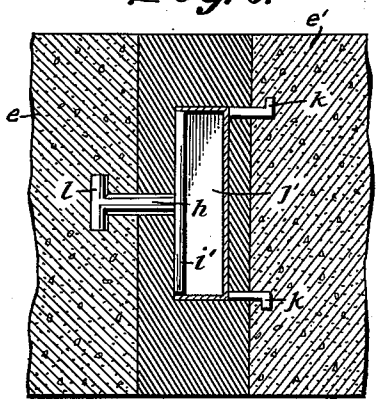

Fig. 7.

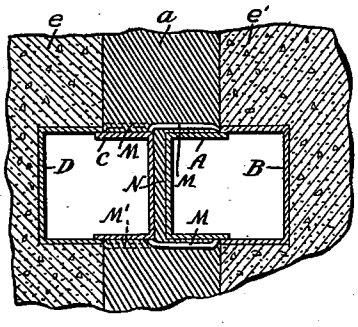

Fig. 8.

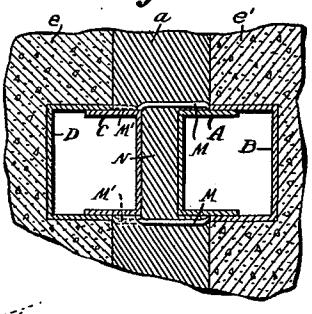

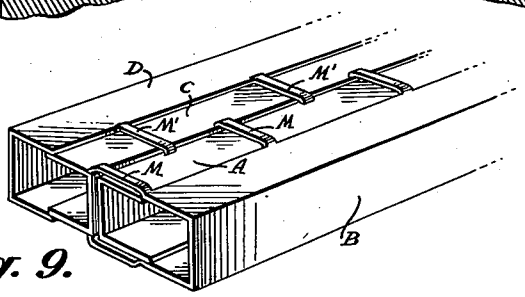

Fig. 9.

INVENTOR.
ALBERT C. FISCHER
BY
Albert F. Robinson
ATTORNEY

Patented Dec. 25, 1951 2,580,163

UNITED STATES PATENT OFFICE

2,580,163

NONEXTRUDING EXPANSION JOINT

Albert C. Fischer, Chicago, Ill.; Wallace C. Fischer and Cecile G. Fischer, executors of said Albert C. Fischer, deceased, assignors to Servicised Products Corporation, a corporation of Illinois

Continuation of application Serial No. 508,027, October 28, 1943. This application April 3, 1947, Serial No. 739,176

3 Claims. (Cl. 94—18)

1

This invention relates to a method of and apparatus for joining spaced elements, particularly structural elements such as pavement sections or slabs.

This case is a continuation of application Serial No 508,027 which was a division of my application Serial No. 122,833, filed January 28, 1937, and issued June 13, 1944, as Patent No. 2,351,255.

The present invention proceeds upon the principle of joining relatively movable structural elements through the intermediary of a filling medium in such a way that the joint between the elements remains tight despite any movements which the elements experience. Although the invention disclosed herein is of particular utility in the joining of pavement sections or slabs which experience expanding and contracting movements in accordance with temperature variations, it may as well be applied to any other field of structures in which similar problems are encountered. In the present art of roadway construction, pavement sections are separated by a filling medium which permits expansion of the sections with seasonal variations. However, when once expansion has taken place, the filling medium is extruded from the joint between the sections and flows upon the roadway in all directions. When the pavement sections contract there is no longer available the sealing medium which was placed in the joint originally, and dirt, moisture, and foreign matter enter the joint with their consequent deleterious effects. It is the primary object of the present invention to provide arrangements permitting a storage of the filling medium which normally is extruded from the joint for return thereto upon the contraction of the juxtaposed structural elements. The filling medium may be fluid, semi-fluid, or plastic material, subject to cold flow with or without the imposition of pressure, as well as various inherently compressible materials, as long as it is capable of entering into the storage space provided therefor upon the expansion of the structural elements and flowing therefrom upon their return movement.

It is a further object of my invention to provide novel transloading arrangements between adjacent pavement sections in order to produce a roadway having a long life without deterioration.

It is a further object of my invention to provide transloading arrangements in expansion joints of a pavement embodying features for maintaining substantially constant the volumetric capacity of the sealing medium in the expansion joint despite variations in the width of the expansion joint occasioned by the expanding and contracting movements of the pavement sections.

2

Other objects and purposes will appear from a more detailed description of the invention following hereinafter, taken in conjunction with the accompanying drawings, wherein:

Fig. 1 is a vertical sectional view of an expansion joint between two adjacent structural elements such as pavement sections;

Fig. 2 is a perspective view of a pair of the space defining elements within the expansion joint shown in Fig. 1;

Fig. 3 is a vertical sectional view of an expansion joint embodying another form of the invention including a transloading device;

Fig. 4 is a vertical sectional view along line 4—4 of Fig. 3;

Fig. 5 is a plan view of a pavement embodying alternately arranged transloading elements of the type illustrated in Figs. 3 and 4;

Fig. 6 is a vertical sectional view of a variation of the arrangement shown in Fig. 3;

Fig. 7 is a vertical sectional view of a different embodiment of the invention showing the positioning of the parts when the joint is extended as a result of the contracted condition of the pavement sections;

Fig. 8 is a view similar to Fig. 7 showing the positioning of the parts when the expansion joint is narrowed as a result of the expanded condition of the pavement sections; and

Fig. 9 is a perspective view of cooperating elements associated with the pavement sections as shown in Figs. 7 and 8.

In Fig. 1 of the drawings the structural members, which may consist of concrete, are designated by *e* and *e'*, having a gap therebetween, which is adapted to be filled by a suitable filling medium *a* capable of yielding to the expanding and contracting movements of the sections *e* and *e'*. Heretofore an expansion joint of this type was filled with a plastic medium at the time of construction of a roadway or analogous structure, which proved satisfactory until expanding movements of the juxtaposed sections occasioned an extrusion of the filling medium from the joint which was lost forever therefrom by virtue of the tendency of this filling medium to flow or pass away from the joint along lines of least resistance. Therefore, upon a return of the elements *e* and *e'* to their original position, an insufficient amount of the filling gave rise to joints and spaces into which entered sand, grit, water, and other

undesirable foreign materials. The present invention obviates these difficulties by providing an expansion joint between two structural members which automatically adjusts the volumetric space between the structural members for all relative positions thereof, so that provision is made for accommodating the filling medium without its extrusion from the joint. This is generally accomplished by apportioning the space between the structural members into void spaces containing no sealing medium and filled spaces, and by adjusting the relative dimensions of such void and filled spaces in accordance with the movements of the structural members to maintain the volumetric capacity of the filled spaces substantially constant.

In the form of the invention illustrated in Figs. 1 and 2, the above objects are realized by using one or more angularly disposed resilient metallic plate elements *b* joined at an apex. Each apex is reinforced by a rib member *c* straddling the apex as shown most clearly in Fig. 2. Each rib member *c* may be embedded or anchored in a structural member *e* or *e'* as shown in Fig. 1. In Fig. 1 a series of such are shown at different levels of the joint, with aligned pairs of such elements defining parallelograms of space which are sealed against entry of the fluid medium. Bearing plates *d* extend between the free ends of the angular plates and have slots *f* therein cooperating with pins *p* upon the free ends of the angular plates to effect a guiding of the latter in the course of the movements of the structural members to vary the outline of the parallelograms of space and thus the volumetric capacity embraced thereby. The space or spaces defined by such parallelograms may be filled with a suitable material which will readily yield to the movements of the metallic plates, such as resilient fabric or other fibrous or flexible material. Thus it will readily be seen that when the sections *e* and *e'* experience a relative approaching movement towards each other to narrow the gap therebetween, the vertical apexes of the parallelograms will travel towards each other on plates *d*, thereby reducing the void spaces embraced thereby and allotting more space for the accommodation of the filling medium in the gap, which otherwise would tend to be extruded therefrom.

Although the expansion joint shown in Fig. 1 is illustrated as applicable to two similar sections capable of movement, it may also be adapted to an element which is movable with respect to a fixed section.

In Fig. 3 is shown another form of realizing the present invention incorporated in a transloading device which serves to neutralize the destructive forces operating upon the ends of pavement sections by the repeated shocks imposed upon such ends. In this arrangement a transloading dowel bar *h* is anchored at *g* in the pavement section *e'*. The other end of the bar *h* is in the form of an enlarged face *i* which operates as a piston in conjunction with a chamber *j* formed in the pavement section *e*. It is readily seen that a relative expanding movement between the pavement sections gives rise to a narrowing of the gap between the sections and the travel of the piston *i* towards the base of the space *j*. Thereby a space is formed upon the right face of piston *i* for receiving the filling medium, which otherwise would be extruded from the joint and which is in position to be returned thereto upon the return contracting movements of the pavement sections. Thus a portion of the chamber *j* to the left of the piston *i* may be considered a chamber for excluding the sealing medium, while the portion of the chamber *j* to the right of the piston *i* may be considered a chamber for containing the sealing medium.

In Fig. 4 is illustrated a series of transloading elements arranged along the end wall of a pavement section for the purpose of obtaining a uniform transfer of the loads on the roadway to the two juxtaposed sections. Furthermore, the volumetric spaces occasioned by the movements of the pistons or plates *i* in the chambers *j* must be apportioned suitably to the size of the gap and the extent of movements of the pavement sections to provide adequate storage for the filling medium in accordance with the movements of the sections.

Fig. 6 shows another modification of a transloading arrangement in conjunction with a device for storing the filling medium for subsequent utilization by the joint. In this modification the transloading element *h* is anchored at *l* in the pavement section *e*. The piston or plate member *i'* is designed to cooperate with a chamber *j'* extending into the gap, and this chamber is suitably anchored or embedded in the pavement section *e'* by means of arms or plates *k*. Relative movement between the pavement sections controls the space occupied by the filling medium as described above in conjunction with the modifications illustrated in Figs. 3 and 4.

In order to realize a perfectly balanced arrangement, the transloading devices may be alternated in their placement in the opposite pavement sections, as shown in Fig. 5. In this instance the transloading devices which may be either in the form as shown in Fig. 2 or that as shown in Fig. 6, are anchored at *g* in both the pavement sections *e* and *e'*, and the chambers *j* are likewise alternately arranged in the pavement sections *e* and *e'* for cooperation with the pistons or plate member *i* on the respective dowel bars.

In Figs. 7 to 9 is shown another form of realizing the present invention. This assembly consists in forming chambers in the opposite walls of the movable structural sections which are designed to cooperate with plate members or piston elements connected to the end walls of the sections. The unit shown in these figures represents a chamber B which is designed to be formed in the right end wall of an expansion joint and which wall has operatively connected thereto by means of bridging arms M, a piston element or plate member C for cooperation with a chamber D formed in the opposite wall. This chamber D is adapted to be formed in the end wall of the left section of the expansion joint, and has operatively connected thereto, through connecting arms M', a piston-like element A designed to cooperate with space B. The assembly of the above-described elements for mutual cooperation is illustrated in Fig. 9. The placement of this assembly in concrete sections *e* and *e'* is illustrated in Figs. 7 and 8, and by an examination of these figures it is readily seen that as the pavement section *e* moves to the right by the expansion thereof, piston A moves with section *e* to enter chamber B within the pavement section *e'*. If *e'* experiences a like expanding movement, it moves to the left and takes therewith piston C which enters chamber D in the pavement section *e*.

The placement of the sealing medium *a* for the positioning of the parts under different operating conditions is shown in Figs. 7 and 8. The space N for accommodating the plastic filler is

small when the gap between the pavement sections, as a result of their contractions, is large, as shown in Fig. 7. When the pavement sections approach towards each other, the space N becomes larger to accommodate the filler body which would otherwise be extruded from the joint, as shown in Fig. 8. In the last-mentioned view may be seen the nesting of piston C in chamber D and piston A in chamber B, giving rise to the enlarged space N, into which may be forced the sealing medium for storage while the movable sections *e* and *e'* remain in the position shown in Fig. 8. Upon their partial or complete contraction the pistons A and C reenter the gap between the pavement sections and force the material from the space N into the gap to maintain it completely filled for all positions assumed by *e* and *e'*.

The chambers B and D and the respective cooperating pistons A and C may extend for only short lengths simulating the chambers shown in Fig. 4 or they may extend across substantial lengths or the complete length of the pavement roadway as indicated in Fig. 9. Of course, the arms M and M' for bridging the elements B—C and A—D, respectively, are staggered, as shown in Fig. 9 to permit the relative movement of the elements and the passage of the filling medium. This assembly functions also as a transloading device to realize the structural advantages accruing from such a unit operating in an expansion joint of a pavement.

The arrangements described above may consist of prefabricated elements which are built into the structural sections prior to or at the time of construction. The elements may be set into the structural sections or these sections may be formed about the elements. Likewise the filling material may be preformed and positioned prior to the placement of the structural elements or the filling material may be introduced subsequent to the positioning of the parts.

The features attendant the dowel bar or transloading devices disclosed herein may be realized with or without the utilization of the features relating to the disposition and action of the filling medium.

It is understood that the present invention assures a complete filling of an expansion joint under all conditions and presents a marked improvement over the art as presently developed, which comprehends filling media of fibrous materials or semiplastic materials in addition to plastic materials capable of flowing. Sealing devices for bridging the opposing faces of the expansion joints, such as are known in the art, may be used in conjunction with the devices in accordance with the present invention. Such sealing devices may be placed upon either the upper or lower surface of the joint.

Any fibrous resilient and highly compressible material may be disposed in the spaces which are void of filling medium, as described above in conjunction with the first embodiment of the invention. Also such spaces may be left void.

The chambers formed in the structural sections may be lined in whole or in part with metallic or other suitable liners, with or without vent

openings, according to the need therefor. Any expedients known in the art may be availed of to obtain smoothly operating and tight joints between the several forms of space-defining means disclosed above.

While I have described my invention as embodied in concrete forms and as operating in certain ways for purposes of illustration, it should be understood that I do not limit my invention thereto, since various modifications will suggest themselves to those skilled in the art without departing from the spirit of my invention, the scope of which is set forth in the annexed claims.

What is claimed is:

1. In an expansion joint between two juxtaposed pavement sections with a gap therebetween filled with a sealing medium, a pair of space defining elements each composed of two angularly disposed resilient plates meeting at an apex, which apex is affixed to one of the pavement sections opposite the apex of the other element affixed to the other pavement section from which apexes the resilient plates extend to approach the plates of each other element, with the ends of the opposed plates connected together to define a parallelogram of space from which said filling medium is excluded, and bearing plates for the juxtaposed ends of said elements whereby a movement of the pavement sections varies the contour of the parallelogram of space and the consequent volumetric space remaining in said gap for accommodating the sealing medium.

2. In an expansion joint between two juxtaposed pavement sections with a gap therebetween filled with a sealing medium capable of a flowing deformation, a plurality of superposed pairs of space-defining elements mounted at common levels upon the opposite walls of said pavement sections in said gap, each of said elements formed by a pair of angularly disposed resilient metallic plates having movable ends and meeting at an apex whereat each element is anchored to its respective pavement section, bearing plates disposed between the movable ends of opposed metallic plates and bridging the space between adjacent pairs of said elements whereby the space defined by said elements may be varied in accordance with movements of said pavement sections occasioned by variations in atmospheric conditions.

3. An expansion joint as defined in claim 2, wherein said bearing plates are fitted with slots for cooperation with pins mounted upon the movable ends of the resilient metallic plates for guiding the movement of said plates.

ALBERT C. FISCHER.

REFERENCES CITED

The following references are of record in the file of this patent:

UNITED STATES PATENTS

Number	Name	Date
Re. 20,378	Hall et al.	May 25, 1937
2,085,168	Payne	June 29, 1937
2,222,970	Malcom	Nov. 26, 1940
2,351,255	Fischer	June 13, 1944