Jan. 15, 1963 R. HARPER ET AL 3,073,987

ELECTRON DISCHARGE DEVICE WITH GETTER

Filed Dec. 17, 1959 2 Sheets-Sheet 1

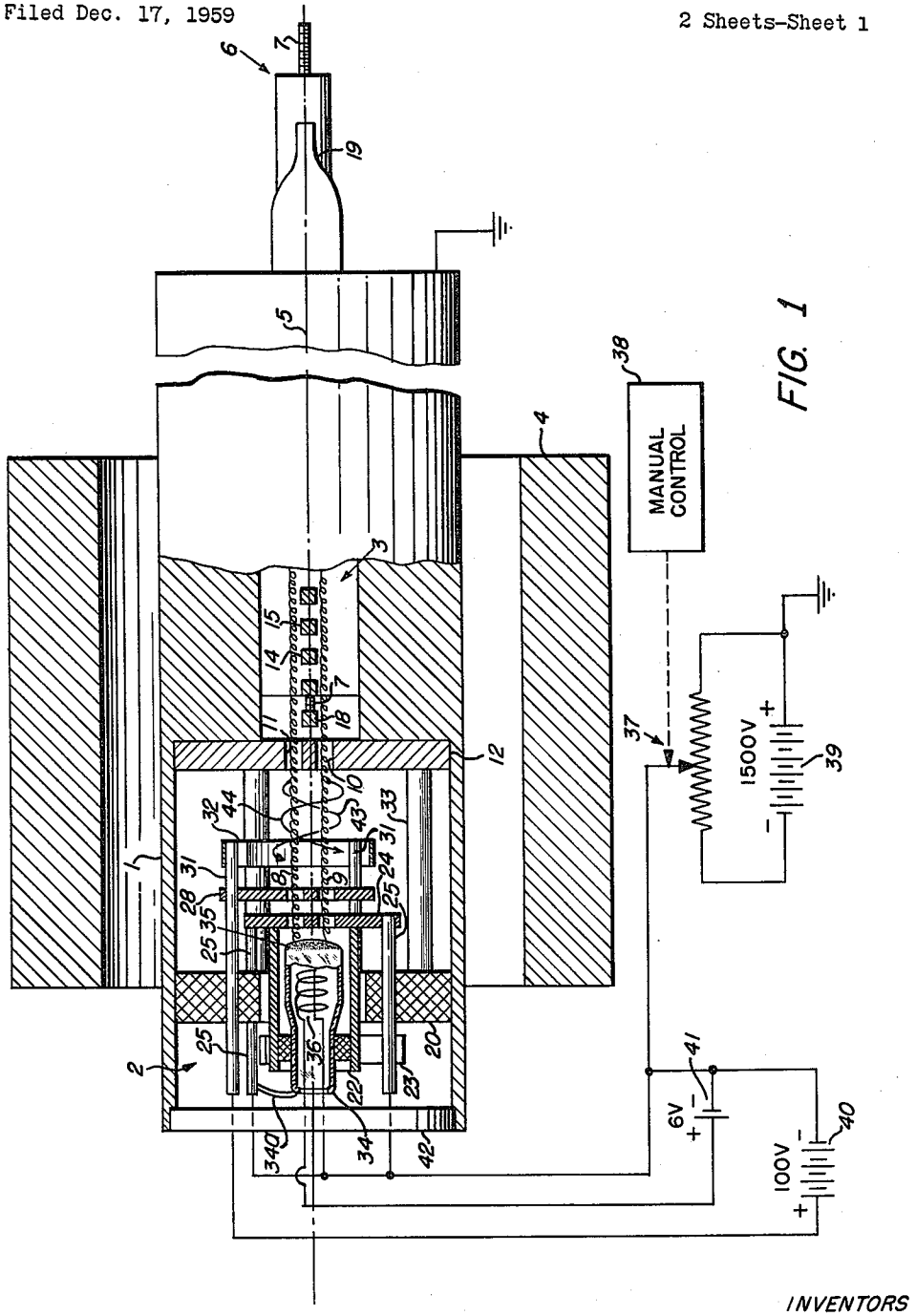

FIG. 1

INVENTORS
ROBERT M. UNGER
ROBERT HARPER

BY H. Vincent Harsha
ATTORNEY

Jan. 15, 1963 R. HARPER ET AL 3,073,987

ELECTRON DISCHARGE DEVICE WITH GETTER

Filed Dec. 17, 1959 2 Sheets-Sheet 2

FIG. 2

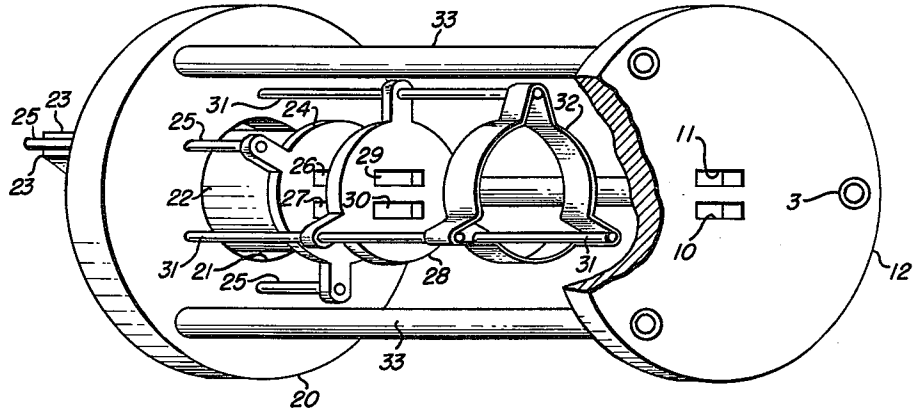

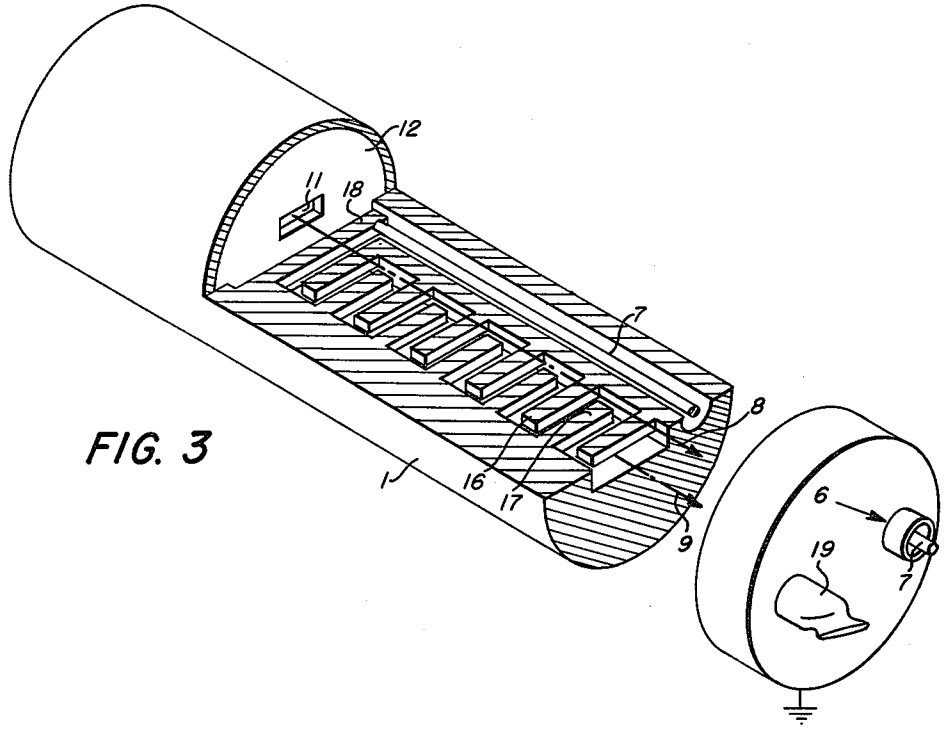

FIG. 3

INVENTORS
ROBERT M. UNGER
ROBERT HARPER

BY H. Vincent Harsha
ATTORNEY

United States Patent Office

3,073,987

Patented Jan. 15, 1963

3,073,987

ELECTRON DISCHARGE DEVICE WITH GETTER

Robert Harper, Concord, and Robert M. Unger, Wayland, Mass., assignors to Raytheon Company, Lexington, Mass., a corporation of Delaware

Filed Dec. 17, 1959, Ser. No. 860,233

9 Claims. (Cl. 315—3.6)

This invention relates to vacuum tube getters, and more particularly, to means adapted to an electron gun for removing gas ions formed in the path of electrons beamed from said gun and capturing said ions with a suitable getter material.

Getter devices are employed within the envelope of vacuum and inert gas tubes to remove gas ions formed therein. Some of these gas ions are formed by the collision of gas atoms or molecules within the tube with electrons which are accelerated between electrodes in the tube, as is normal in the general operation of such tubes. The electrons may move as clouds or as a beam and upon striking a gas molecule will often ionize the gas molecule forming a gas ion which may have a positive or negative charge. The gas ions are undesirable because they make the otherwise electrically inert atmosphere of the tube slightly conductive and discharge electrodes within the tube will not function properly. For example, the ionized gases will flow to the discharge electrodes within the tube thereby adding to electrode currents. These additions are not uniform and produce "shot" effects which cause electrical noise in output signals taken from such electrodes in the tube.

In the past, getters have usually consisted of metals which have the property of absorbing gas and this property, usually denoted getter capacity, increases as the temperature of the getter is increased. Consequently, heating elements are often employed as part of the getter structure to raise the getter to a high temperature and gain the advantages of increased getter capacity. Getters operated in this manner often depend only on thermal agitation of the gas ions to bring the ions to the getter so that they may be absorbed therein. In other applications a potential is applied to the getter creating an electrostatic field with other electrodes in the tube. Gas ions of a given sign will move in this electrostatic field towards the getter and be absorbed upon striking the getter.

In applications where a potential is applied to the getter, the getter material itself is usually located at such a place in the tube where the resulting electrical field running to the getter will not interfere with the flow of electrons which perform the functions of the tube. It is often difficult to find such a suitable location for the getter because, as a rule, the gas ions are created by the impingement of electrons in beams or clouds with gas molecules and, consequently, a high density of gas ions will exist in the middle of such cloud or beam and these ions will move over substantially the same paths as the electrons, thereby interfering with electron flow and causing the above-mentioned shot effect. In some devices, such as traveling wave tubes and klystrons where an electron beam is formed of bunches of electrons, gas ions in the beam path disturb the bunches adding noise in the output of the device. Therefore, it is an object of the present invention to provide means for attracting and absorbing gas ions formed within the envelope of an electron discharge device, whereby said ions will flow over different paths than said electrons.

It is another object to provide means including a cold getter for collecting and absorbing gas ions formed within the envelope of an electron discharge device.

It is another object to provide a cold getter suitably coupled to an operating electrode in an electron discharge device for intercepting gas ions moving over different paths than electron currents.

It is another object to provide a cold getter situated within the structure of an electron gun to intercept gas ions accelerated by electrostatic and magnetic fields over paths substantially different from electron flow paths within the tube.

It is a feature of this invention to employ a cold getter composed of a material having suitable gas absorbing properties, such as titanium, coupled to an electrode in an electron discharge device and disposed so as to intercept gas ions accelerated by electrostatic and magnetic fields which also accelerate electrons within the tube to perform the operating functions of the tube.

It is another feature to dispose a body of getter material at a suitable position in an electron discharge device so that gas ions generated within and immediately around a beam of spiraling electrons flowing within the device will be accelerated towards the getter over spiral paths of considerably larger radius than the spiral paths of the electrons.

It is the principal feature of one embodiment of the present invention to provide getter means within the electron gun cavity of a traveling wave type backward wave oscillator for removing gas ions generated therein by collisions of electrons in a beam with gas molecules, said getter means including a strip of titanium metal coupled to an electrode in said device and disposed with relation to said electron beam so that electrostatic and magnetic fields existing within said cavity will accelerate said gas ions over spiral paths which are intercepted by said strip of titanium, said spiral paths being of a substantially larger radius than the crosswise dimensions of said electron beam.

Other objects and features of the present invention will be more apparent from the following specific description taken in conjunction with the drawings in which:

FIG. 1 depicts one embodiment of the present invention showing a partial cross section view of a traveling wave type backward wave oscillator;

FIG. 2 shows an exaggerated perspective view of the electron gun assembly in said oscillator; and

FIG. 3 is a three-quarter cutaway view showing the interdigital delay path and the paths of electron beams in said oscillator.

Turning first to FIG. 1 there is shown a backward wave oscillator comprised of a cylindrical body **1** enclosing an electron gun structure in gun cavity **2** and an interdigital delay line in cavity **3**. A magnet **4**, concentric with the cylindrical body **1**, provides a magnetic field which is substantially uniform at the center of the body and parallel with the body axis **5**. The output of the device is taken at coaxial feed **6** having its inner conductor **7** coupled to one end of delay cavity **3** and its outer conductor coupled to cylindrical body **1** which, in turn, is grounded.

The electron gun structure within cavity **2** generates a pair of electron beams **8** and **9** which pass through rectangular openings **10** and **11** in plate **12**; plate **12** serving to separate gun cavity **2** from interdigital delay cavity **3**.

In operation, the electron beams passing through openings **10** and **11** are substantially rectangular in cross section, just as are the openings. These beams travel the length of cavity **3** on either side of fingers in cavity **3** denoted, for example, **14** and **15**. In FIG. 3 there is a three-quarter sectional view of the oscillator showing the general confirmation of cavity **3** and the paths followed by the electron beams **8** and **9** eminating from openings in plate **12** and proceeding down the length of cavity **3**. The magnetic field setup in cavity **3** and cavity **2** by magnet **4** is substantially parallel with the axis **5**, shown in FIG. 1, particularly in the immediate vicinity of plate **12**. The effect of this magnetic field is to focus the beams

of electrons causing electrons therein to move in tight spiral paths which are tightest in the vicinity of plate **12**. However, at the opposite end of cavity **3** where the magnetic field is less uniform and not substantially parallel with centerline **5**, these spiral paths become somewhat wider and focusing is not as acute. As a result, the beam is collected on fingers at said opposite end such as fingers **16** and **17** shown in FIG. 3.

The output of the system is taken from conductor **7** which is electrically coupled to the first finger **18** at the end of cavity **3** immediately adjacent to plate **12**. The length of finger **18** is substantially equal to one-quarter wavelength of the oscillator frequency and operates as an electrical open circuit to oscillator frequency. Consequently, conductor **7** produces oscillator frequency potential with respect to the ground body of cylinder **1** and with respect to outer conductor **8** of the coaxial output **6**. Sealed tube **19** is provided for evacuating the cavities **2** and **3** and is sealed once they are evacuated.

Turning next to FIG. 2 there is shown a perspective view of the gun structure included within cavity **2** for generating the electron beams **8** and **9** and having a getter structure incorporated therein for removing gas ions generating within cavity **2**. As shown in FIG. 2, the gun structure consists of ceramic plate **20** having a circular opening **21** at its center through which cathode cylinder **22** is mounted. Cylinder **22** is held in place between metal strips **23** (fastened to cylinder **22**) and cathode plate **24**. Cathode plate **24** and metal strips **23** are rigidly fastened to pins **25** which pass through holes in ceramic plate **20** and are rigidly held thereby. Rectangular openings **26** and **27** in cathode plate **24** serve to form the beams **8** and **9** issuing therefrom, giving said beams substantially rectangular cross section shapes.

Grid plate **28** having rectangular openings **29** and **30** is supported by pins **31** so as to be parallel with plate **24** with openings **29** directly in line with opening **26** and opening **30** directly in line with opening **27**. One end of pins **31** also pass through holes in ceramic plate **20** and are firmly held thereby, while the other end of pins **31** extend beyond plate **28** and support a strip **32** of getter material which is composed of, for example, titanium, zirconium or tantalum. The shape and orientation of strip **32** is such that beams of electrons issuing from openings **29** and **30** will pass almost axially through the ring formed by strip **32**.

Plate **12** which separates gun cavity **2** from the interdigital delay cavity **3** has rectangular openings **10** and **11**, opening **10** being substantially in line and having the same general confirmation as openings **27** and **30** and opening **11** bearing the same relationship to openings **26** and **29**. Plate **12** is supported from ceramic plate **20** by support posts **33**.

Turning again to FIG. 1, the location and designation of parts of the gun structure in cavity **2** can be related to the parts shown in FIG. 2 by referring to reference numbers. In addition, FIG. 1 shows parts which are internal to cathode cylinder **22** and these parts include a cathode **34** having a suitable electron emmissive surface **35** coating its one end and a heating coil **36** inserted through its other end for heating said surface. In operation as a backward wave oscillator, cathode **34** and cathode cylinder **22** and cathode plate **24** are electrically coupled together by conductive ribbon **34***a* and all are coupled to the arm of potentiometer **37**. The other terminals of potentiometer **37** are placed across a 1500 volt battery **39** having its positive terminal grounded, as shown, and potentiometer **37** is mechanically positioned by manual control **38**. Consequently, a variable negative voltage is applied to cathode **34**, cathode cylinder **22** and cathode plate **24**. Grid plate **28**, on the other hand, and getter strip **32** which is coupled thereto are placed at 100 volts more positive than cathode plate **24**. This is accomplished by coupling the negative terminal of 100 volt battery **40** to the arm of potentiometer **37** and the positive terminal of battery **40** to one of the support pins **31** supporting grid plate **28** and getter strip **32**. Heater coil **36** may be coupled across a 6 volt battery **41** having one terminal coupled to the arm of potentiometer **37**. Electrical connections are made from the batteries and potentiometer through plate **42** which forms a vacuum seal with body **1** and with such electrical connections.

Electrons emitted from surface **35** move through the openings in cathode plate **24**, and proceed therefrom in tight spiral paths forming the beams **8** and **9**. These electrons are accelerated by the electrostatic field between plates **24** and **28** and the beams formed have rectangular shaped cross sections substantially the same shape as the openings in the plates. The beam electrons are further accelerated by the electrostatic field between grid plate **28** and plate **12**; plate **12** being at ground potential and considerably more positive than plate **28**. The electrostatic fields between adjacent plates in the vicinity of the openings **26**, **27**, **29**, **30**, **10** and **11** are each convergent-divergent. This is because an electrostatic lens effect exists between openings in adjacent plates. Consequently, electrons forming the beams **8** and **9** passing through the mentioned openings, will tend to move at a slight angle to the beam direction, except electrons at the very center of each beam. Since the magnetic field from magnet **4** is substantially parallel to the beam direction, the electrons moving at a slight angle will follow spiral paths contained within the dimensions of the beam and these spiral paths will be of considerably smaller radius than the smallest crosswise dimension of the beam. The spiral motion of electrons in the beam effectively prevents the beam from spreading thereby maintaining the original beam shape. This reaction of a beam of electrons moving substantially parallel to a magnetic field is well known and employed extensively to confine such a beam.

One feature of the present invention arises from the fact that gas ions created by the impingement of beam electrons with gas molecules will also move in spiral paths just as the beam electrons. However, the spiral paths followed by such gas ions, shown in FIG. 1, as paths **43** and **44**, will be of much greater radius than the spiral paths followed by the electrons in the beams. For example, assuming the gas ion charge is of equal magnitude to the electron charge, the mass of an ion is at least 1800 times the mass of an electron, consequently, the radius of spiral paths followed by the ions will be at least $\sqrt{1800}$ times the radius of the spiral paths followed by electrons and a substantial number of such ions will spiral out and strike getter strip **32** as shown by the arrow head on paths **43** and **44**. The velocity of these ions upon striking getter strip **32** will be considerable and most will be taken up by getter **32** by absorption or chemical combination with the titanium. It has been discovered that titanium and, certain other metals, can be employed as cold bulk getters if ions are accelerated so as to strike such materials at high velocity and this discovery is employed in the present invention to render a strip of unheated titanium such as strip **32**, suitable to getter gas ions. In addition, the present invention describes a system whereby gas ions generated by the collision of electrons with gas molecules may be collected and absorbed in remote parts of an electron discharge tube envelope.

Whereas there is described herein one embodiment of the present invention wherein gas ions generated in the electron gun cavity of a traveling wave type backward wave oscillator are caused to migrate from the area of an electron beam and strike a cold getter such as titanium for absorption therein, it is to be understood that the principal feature of this invention whereby such ions are separated from the electron beam and absorbed, might be suitably employed in other electron discharge devices such as an electron storage tube or cathode ray tube, without deviating from the spirit or scope of this invention as set forth in the following claims.

What is claimed is:

1. In an electron discharge device including a cathode space, an interaction space and at least one electrode in said cathode space emitting a beam of electrons for injection into said interaction space, means for removing ions of residual gas produced within said device comprising means producing an electrostatic field for accelerating said electrons and said gas ions, means producing a magnetic field for focusing said electrons and for causing said gas ions to spiral away from said electron beam and a body of ion capturing material disposed in said cathode space for intercepting and absorbing said spiraling gas ions.

2. In an electron discharge device including a cathode space, an interaction space and means in said cathode space emitting a beam of electrons, means for capturing ions of residual gas produced within said device comprising means producing an electrostatic field for accelerating said gas ions in a direction substantially parallel to the direction of said beam of electrons, means producing a magnetic field for causing said accelerated gas ions to proceed on paths directed away from said beam and a suitable ion capturing material composed of titanium disposed in said cathode space to intercept and absorb said accelerated gas ions.

3. In an electron discharge device including a cathode space, an interaction space and means in said cathode space emitting a beam of electrons, means for capturing ions of residual gas produced within said device comprising means producing an electrostatic field for accelerating said gas ions over paths essentially parallel but oppositely directed to the path of said beam of electrons, means producing a magnetic field for further accelerating said gas ions to spiral away from said beam and a body composed substantially of titanium disposed within said cathode space to intercept said accelerated and spiraling gas ions.

4. In an electron discharge device including a cathode space, an interaction space and means in said cathode space emitting a beam of electrons, means within said device for removing ions of residual gas produced within said device by absorption and chemical combination of said ions comprising a plurality of electrodes within said cathode space producing at least one electrostatic field for accelerating said gas ions along paths substantially parallel but opposite in direction to the path of said beam of electrons, means producing a magnetic field for further accelerating said gas ions so that said ions move over spiral paths which proceed away from said beam and a body composed substantially of the metal titanium coupled to one of said plurality of electrodes and disposed to intercept said spiraling gas ions at a distance from said beam which is considerably greater than the crosswise dimension of said beam.

5. In an electron discharge device including means in said cathode space emitting a beam of electrons, means for removing ions of residual gas produced within said cathode space comprising a plurality of electrodes in said device maintained at different voltages, at least one of said plurality of electrodes being at a lower potential than the others thereby producing an electrostatic field which accelerates gas ions in a direction substantially opposite the direction of said beam of electrons, means producing a magnetic field in said cathode space, the combined effect of said electrostatic and magnetic fields being to cause said gas ions to spiral away from said beam and a body composed substantially of the metal titanium coupled to said one electrode and disposed to intercept said spiraling ions.

6. In an electron discharge device including a cathode space, an interaction space and means in said cathode space emitting a beam of electrons, means for removing ions of residual gas produced within said cathode space comprising a plurality of electrodes within said device at different potentials producing an electrostatic lens field for accelerating said beam of a electrons and for accelerating said gas ions in substantially opposite directions, means producing a magnetic field substantially parallel to said electrostatic lens field and a body composed of the metal titanium coupled to one of said electrodes and disposed to intercept gas ions which follow spiral paths of considerably larger radius than spiral paths followed by electrons in said electron beam.

7. Means for capturing ions of residual gas produced in a traveling wave tube comprising an electron gun producing a beam of electrons, said gun including electrodes producing an electrostatic field for accelerating said beam of electrons, means producing a magnetic field substantially parallel to said beam of electrons and a body of getter material composed of titanium coupled to one of said gun electrodes and disposed in said electrostatic and magnetic fields to intercept gas ions moving in spiral paths away from said electron beam.

8. Means for intercepting and absorbing gas ions produced by the collision of electrons in a beam with gas molecules in a traveling wave type backward wave oscillator, said oscillator including a gun cavity and a delay line cavity, comprising an electron gun in said gun cavity producing parallel beams of electrons, said gun including a plurality of electrodes at different potentials producing an electrostatic field for accelerating said beams of electrons towards said delay line cavity and for accelerating said generated gas ions in a substantially parallel but opposite direction, means producing a substantially uniform magnetic field parallel to said beams of electrons, and a ring of getter material composed of titanium coupled to one of said gun electrodes and disposed in said device so that said electron beams pass through and substantially near the center of said ring and so that said gas ions generated by said beam striking gas molecules and proceeding over spiral paths when accelerated by said electrostatic and magnetic fields, will be intercepted and absorbed by said body of getter material thereby removing said gas ions from said gun cavity.

9. In an electron discharge device comprising cathode means emitting electrons which strike residual gas molecules creating gas ions, at least one electrode for accelerating said electrons in a given direction, means producing a magnetic field substantially parallel to said given direction and means coupled to one of said electrodes composed substantially of the metal titanium disposed in said electric and magnetic fields to intercept and capture said gas ions accelerated by said fields.

References Cited in the file of this patent

UNITED STATES PATENTS

2,767,344	Hines	Oct. 16, 1956
2,870,364	Doolittle et al.	Jan. 20, 1959
2,898,501	Wadia et al.	Aug. 4, 1959

UNITED STATES PATENT OFFICE
CERTIFICATE OF CORRECTION

Patent No. 3,073,987

January 15, 1963

Robert Harper et al.

It is hereby certified that error appears in the above numbered patent requiring correction and that the said Letters Patent should read as corrected below.

Column 2, line 67, for "eminating" read -- emanating --; column 3, line 16, for "ground" read -- grounded --; column 3, line 59, for "emmissive" read -- emissive --; column 4, line 48, strike out the check mark before "1800"; column 5, line 58, and column 6, line 8, for "cathode space", each occurrence, read -- device --; column 5, line 59, and column 6, line 9, for "device", each occurrence, read -- cathode space --; column 6, line 11, strike out "a".

Signed and sealed this 8th day of October 1963.

(SEAL)
Attest:

ERNEST W. SWIDER
Attesting Officer

EDWIN L. REYNOLDS
Acting Commissioner of Patents

UNITED STATES PATENT OFFICE
CERTIFICATE OF CORRECTION

Patent No. 3,073,987

January 15, 1963

Robert Harper et al.

It is hereby certified that error appears in the above numbered patent requiring correction and that the said Letters Patent should read as corrected below.

Column 2, line 67, for "eminating" read -- emanating --; column 3, line 16, for "ground" read -- grounded --; column 3, line 59, for "emmissive" read -- emissive --; column 4, line 48, strike out the check mark before "1800"; column 5, line 58, and column 6, line 8, for "cathode space", each occurrence, read -- device --; column 5, line 59, and column 6, line 9, for "device", each occurrence, read -- cathode space --; column 6, line 11, strike out "a".

Signed and sealed this 8th day of October 1963.

(SEAL)
Attest:

ERNEST W. SWIDER
Attesting Officer

EDWIN L. REYNOLDS
Acting Commissioner of Patents