March 1, 1932. E. E. GREVE 1,847,087

SPIDER AND SLIP CONSTRUCTION

Filed Sept. 2, 1927

Fig. 1.

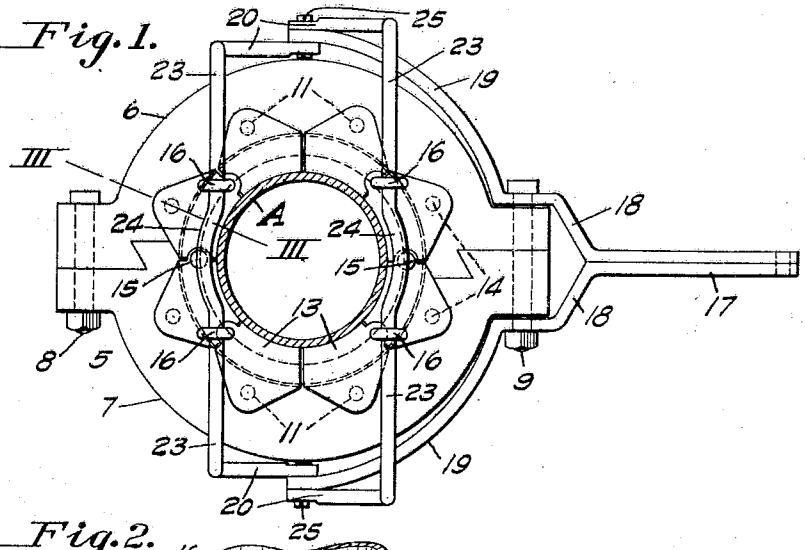

Fig. 2.

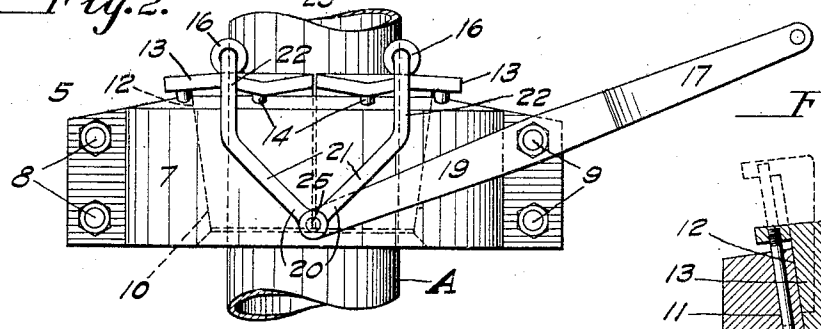

Fig. 3.

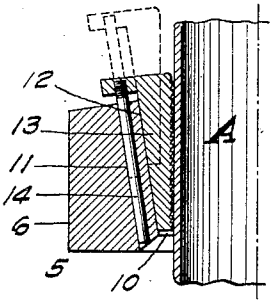

Fig. 5.

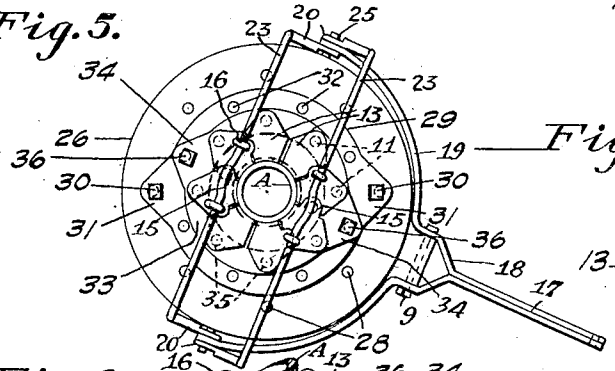

Fig. 4.

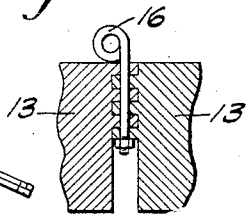

Fig. 6.

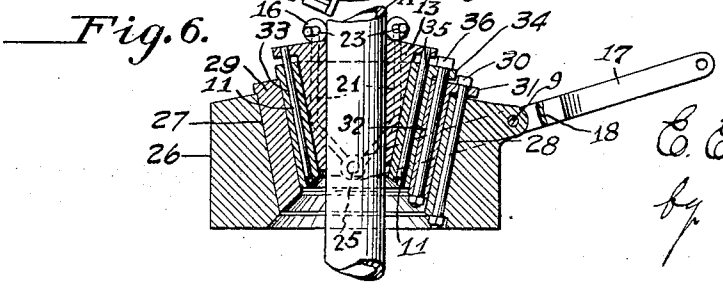

Inventor

E. E. Greve

by W. G. Doolittle

Attorney

Patented Mar. 1, 1932 1,847,087

UNITED STATES PATENT OFFICE

EDGAR E. GREVE, OF BELLEVUE, PENNSYLVANIA, ASSIGNOR, BY MESNE ASSIGNMENTS, TO OIL WELL SUPPLY COMPANY, OF PITTSBURGH, PENNSYLVANIA, A CORPORATION OF NEW JERSEY

SPIDER AND SLIP CONSTRUCTION

Application filed September 2, 1927. Serial No. 217,096.

This invention relates to a new and improved spider and slip construction, and more particularly to a spider and slip construction designed for use in connection with either the cable system of drilling oil, gas and other wells, or for use in connection with the rotary drilling system.

My invention contemplates an improved spider and slip construction in combination with means for manipulating the slips in the operation of suspending or pulling casing, drive pipe, and sections of pipe and tubing employed in well drilling apparatus.

Among the objects of my invention are to provide a new and improved spider and slip device of the character specified, of simple and efficient construction, including means for moving the slips into and out of operative positions; to provide new and improved slip manipulating means; to provide means for effecting a vertical movement of the slips relatively to the bore of the spider and a simultaneous spreading movement of the slips; and to provide simple and efficient means for handling different sizes of pipe or casing in connection with the spider and slip manipulating means.

Further additional objects and advantages of the present invention will be pointed out or become apparent from a consideration of operative embodiments as hereinafter described, and as shown by the drawings.

In the accompanying drawings, which illustrate applications of my invention:

Fig. 1 is a top plan view of a spider and slip construction in combination with means for manipulating the slips embodying my invention, shown in connection with a section of a pipe to which the device is applied;

Fig. 2, a side elevational view of the same;

Fig. 3, a detail sectional view, the section being taken on line III—III of Fig. 1;

Fig. 4, a detail sectional view, particularly showing portions of two interfitting slips with an eye-bolt passed therethrough;

Fig. 5, a top plan view of a modified form of spider construction; and

Fig. 6, a vertical irregular sectional view of the form of Fig. 5.

As illustrated and as preferred, the spider and slips cooperate to clamp the suspended pipe or the like by a wedging action. Accordingly, the central opening in the spider is tapered outwardly with the larger end uppermost, while the slips are tapered with their larger ends uppermost. The spider may comprise one or more sections. If the spider is to be used where the pipe remains always of one diameter, I may use a form of spider having one section. If, on the other hand, occasion arises to change the diameter of the pipe being used in the well, I may use a spider having a body made up of inner and outer sections, the inner section of the body being in the form of a bushing, or a plurality of bushings. In this latter case, for an opening of reduced size, the bushing section is left in the outer section of the spider, while if a full size opening is desired, the inner section is removed. I will describe first a form in which the central opening in the spider remains always one size, and therefore referring first to the form of Fig. 1, the spider proper, designated generally by the numeral 5, comprises two portions 6 and 7 secured together by transversely extending pins or bolts 8 and 9. As shown, the body is formed with an axial tapered opening or central bore 10; and with a number of small rod or pin receiving openings 11 extending through the body and arranged in planes inclined to the vertical axis of the body, opening 10 at its upper end being somewhat enlarged as shown at 12.

Removably disposed within the opening 10 of the spider body are pipe-engaging slips 13. As illustrated, these slips are divided into two sets, each set comprising four hingedly connected interlocking slip members, with each member provided with a guide rod 14 adapted to be entered in one of the inclined vertically extending openings 11 of the spider body.

The adjacent slip members of each set are connected to each other by means of cooperating hinge lugs on adjacent slip members and hinge pins or bolts 15 and 16, the hinge pins 16 having eyes for the reception of slip manipulating mechanism.

The slip manipulating mechanism, as

shown, comprises an operating lever or handle member, designated generally by the numeral 17; said member includes spaced-apart bent portions 18 and spaced-apart curved portions 19. The bent portions 18 are pivotally mounted on one of the bolts 9, which constitutes the fulcrum for the said lever. Secured to the ends of the respective curved portions 19, at diametrically opposite sides of the spider body, are two link or lifting members 20. Each of these members 20 is formed with inclined bent end portions 21, vertically extending portions 22, horizontal transversely extending portions 23, and a central curved portion 24. The ends of the bent portions 21 are pivotally connected with the ends of the curved portions 19 of the lever device by pivot pins 25.

The lifting or link members 20 are connected with the two sets of slips by means of the eye-bolts 16. It will be understood that the slips may be elevated or withdrawn from the spider by pressing down on the pivotally mounted operating lever 17 and that, upon releasing lever 17, the slips will drop into operative position. Owing to the inclination of the openings 11, in which the guide pins 14 of the slip members operate, the slips, as they are elevated from the bore of the spider will spread apart or be drawn away from the smaller vertical position to a greater distance from the vertical center during which operation the eye bolts 16 necessarily move slightly along or longitudinally with respect to the rods 23.

For the purpose of handling different sizes of pipe and casing without changing the slips, that is to say, providing larger and heavier slips for smaller sizes of pipe, I provide a spider body comprising an outer section and one or more bushing sections designed to be inserted in the bore of the spider and used in connection with the slips and the slip manipulating means. Such bushings may, of course, be used in connection with a divided spider of the form shown by Fig. 1, or they may be employed with a one-piece spider such as shown by the form of Fig. 5. A very desirable form of bushing for use in connection with the spider and slip construction is shown in the form of my invention illustrated by Figs. 5 and 6 of the drawings.

Referring now to the form of Figs. 5 and 6, 26 designates the outer section of the spider body having a tapered bore 27 and a number of inclined vertically extending openings 28. In this form, two inner or bushing sections are shown, but, in practice, it should be understood that I may employ a single bushing section only in place of the two shown. 29 designates the outer or larger bushing adapted to be inserted in the bore of the spider and be maintained in the desired position therein by one or more bolts 30 passed through a flange or lug 31 on the bushing and down through an opening 28. Bushing 29 is formed with inclined vertically extending openings 32 adapted to receive the guide pins carried by the slip members, or when two bushings are employed, a connecting bolt or bolts for securing the second bushing to the first, the bushing sections in each instance co-acting with the outer section 26 of the spider body to jointly form a sectional body.

The second bushing 33 is of similar construction, and includes apertured lugs 34 and a number of rod or pin receiving openings 35, the latter being provided for the reception of the guide pins of the slips.

36 is one of several bolts for securing the inner or second bushing to the outer bushing. The function of the bolts 30 and 36 is to prevent the bushings being carried out of the spider when the slips are elevated. The slips and slip manipulating mechanism are shown in place and except for dimensions and proportions, the parts are of identical construction with those bearing corresponding reference characters in Figs. 1 to 4.

A illustrates a section of a pipe suspended by the spider and slip construction.

I claim:

1. In a spider and slip construction, the combination with a spider body having a tapered axial bore and vertically extending inclined guide-rod receiving openings, of two sets of slip members for encircling a pipe, each set comprising a plurality of hingedly connected interlocking slips, said slips having guide rods entered in the said receiving openings, eye members on the slip members, and slip manipulating means cooperating with the eye members for positioning the slips relatively to the bore of the spider and including elements passing through the eye members and along which the eye members are slightly movable.

2. In a spider and slip construction, the combination with a spider body comprising an outer section having a tapered bore, and an inner bushing section disposed within the bore and formed with guide rod receiving openings, of two sets of slip members for encircling a pipe, each set comprising a plurality of connected slips, said slips each having a guide rod entered in the receiving opening of the bushing section, connecting rods attached to the slip members, and slip manipulating means cooperating with the connecting rods for positioning the slips relative to the bore of the inner bushing section of the spider.

3. In a spider and slip construction, the combination with a spider body having a tapered axial bore and vertically extending inclined guide-rod receiving openings, of two sets of slip members for encircling a pipe, each set comprising a plurality of connected slips, said slips having guide-rods entered in the said receiving openings, connecting

means attached to the slip members, and slip manipulating means cooperating with the connecting means for positioning the slips relative to the bore of the spider, said manipulating means fulcrumed to the spider and including an operating lever and a link connection between the operating lever and the said connecting means.

4. In a spider and slip construction, the combination with a spider body having an axial tapered bore and inclined guide-rod receiving openings, of two sets of movably connected slips suspended in said bore and having inclined guide-rods adapted to be entered in the rod receiving openings in the spider body, and slip manipulating means carried by the body having elements along which certain of the slips are movable, said tapered bore, rod receiving openings, and rods cooperating to effect a spreading of the slips as said slips are raised in the bore of the spider.

5. In a spider and slip construction, the combination with a spider body having a tapered bore, of a plurality of slip members in said bore, slidably interfitted inclined openings and guide rod connections between the body and said slip members, substantially parallel rods connected to the slip members and along which certain of the slip members have limited movement, and means operable to move the rods in parallelism substantially radially of the body and toward and away from each other.

6. In a spider and slip construction, the combination with a spider body having a tapered bore, of a plurality of slips in said bore, slidably interfitted inclined openings and guide rod connections between the body and said slips, substantially parallel rods connected to the slips and along which certain of the slips have limited movement, said rods having end portions, an operating lever, and means pivotally connecting said end portions and said lever together, whereby the lever is operable to move the rods in parallelism substantially axially of the body and toward and away from each other.

7. In a spider and slip construction, a spider having an outer section and a plurality of inner sections, each section having a tapered bore, each of the inner sections being seated in the bore of an adjacent section, means for securing the sections to each other, there being guide rod receiving openings in each spider section, a plurality of sets of slip-members for encircling a pipe, each set having a plurality of slip members, a guide rod on each slip member within a guide rod receiving opening in the inner section, and means connected to each set of slip members for positioning the slip members relative to the bore in the inner section.

8. In a spider and slip construction, a spider having an outer section and a plurality of inner sections, each section having a tapered bore, each of the inner sections being seated in the bore of an adjacent section, means for securing the sections to each other, there being guide rod receiving openings in each spider section, said means comprising bolts adapted to extend into some of said openings, a plurality of sets of slip-members for encircling a pipe, each set having a plurality of slip members, a guide rod on each slip member within a guide rod receiving opening in the inner section, and means connected to each set of slip members for positioning the slip members relative to the bore in the inner section.

In testimony whereof I affix my signature.

EDGAR E. GREVE.