2 Sheets—Sheet 1.

# N. B. PHELPS.

## WRINGING-MACHINES.

No. 194,171. Patented Aug. 14, 1877.

Fig. 1.

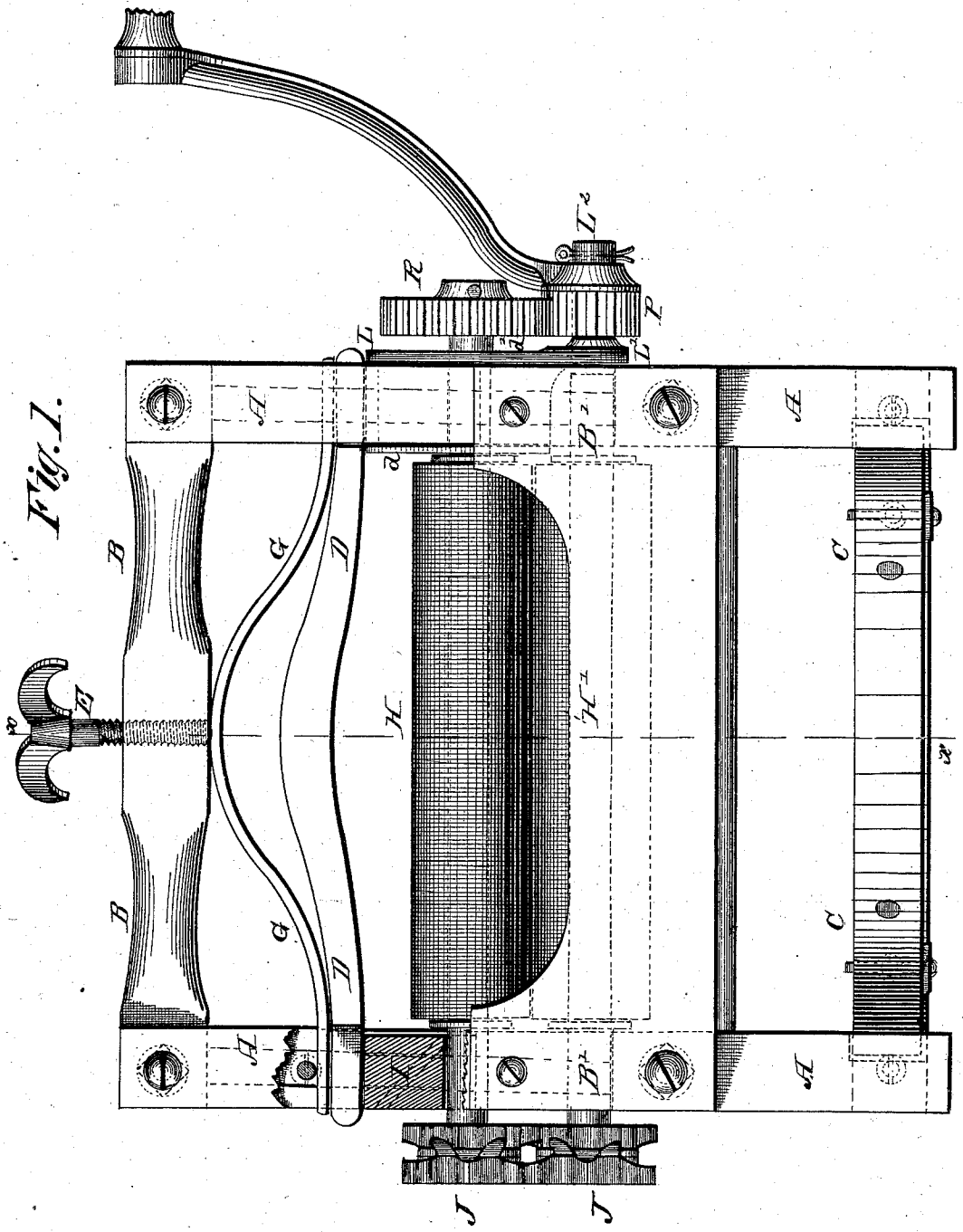


Witnesses:

P. C. Dieterich

Frank H. Duffy

Inventor:

Napoleon B. Phelps,

Per C. A. Watson & Co. Attorneys.

N. PETERS, PHOTO-LITHOGRAPHER, WASHINGTON, D. C.

2 Sheets—Sheet 2.

# N. B. PHELPS.

## WRINGING-MACHINES.

No. 194,171. Patented Aug. 14, 1877.

Fig. 2.

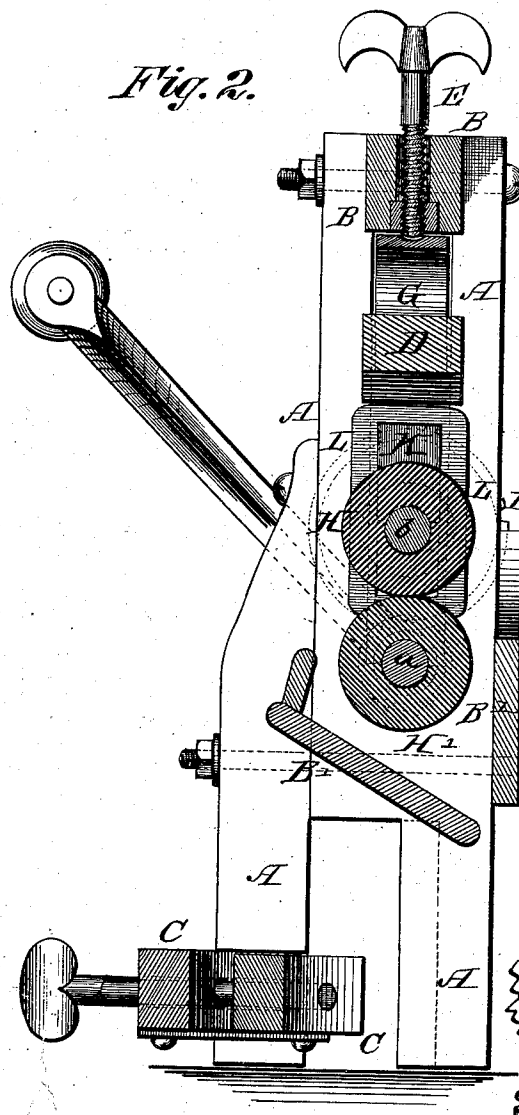


Fig. 3.

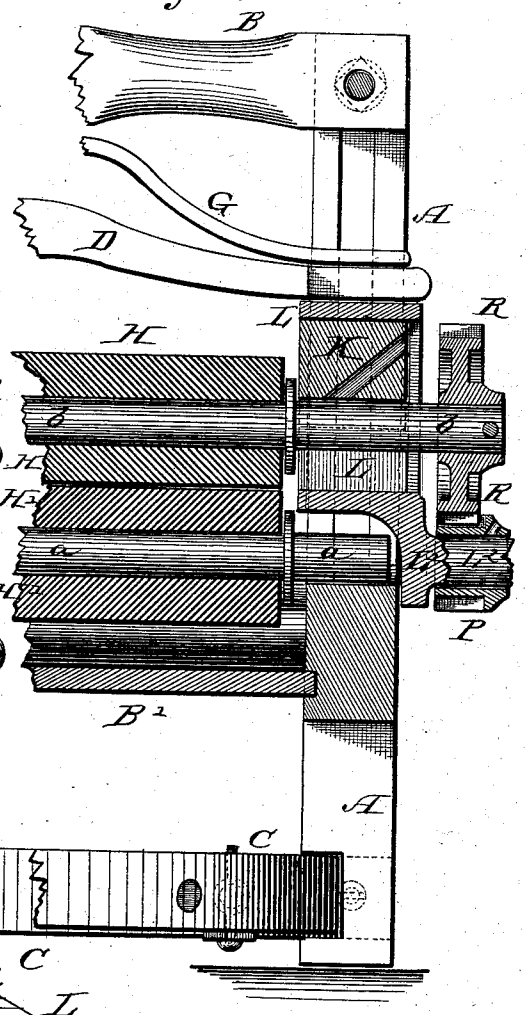


Fig. 4.

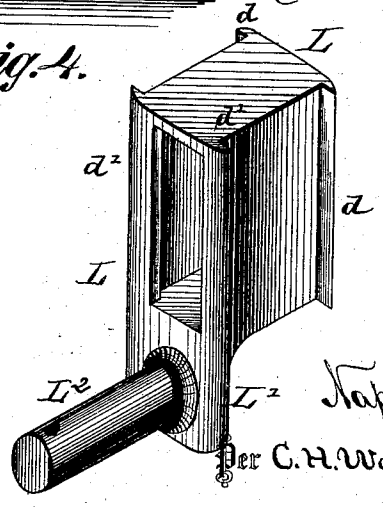


Witnesses:

P. C. Dieterich

Frank H. Duffy

Inventor:

Napoleon B. Phelps.

Per C. H. Watson & Co Attorneys.

N. PETERS, PHOTO-LITHOGRAPHER, WASHINGTON, D. C.

# UNITED STATES PATENT OFFICE.

NAPOLEON B. PHELPS, OF NEW YORK, N. Y.

## IMPROVEMENT IN WRINGING-MACHINES.

Specification forming part of Letters Patent No. **194,171**, dated August 14, 1877; application filed June 12, 1877.

*To all whom it may concern:*

Be it known that I, NAPOLEON B. PHELPS, of New York, in the county of New York and State of New York, have invented certain new and useful Improvements in Wringing-Machines; and I do hereby declare that the following is a full, clear, and exact description thereof, which will enable others skilled in the art to which it appertains to make and use the same, reference being had to the accompanying drawings, and to the letters of reference marked thereon, which form a part of this specification.

My invention relates to wringing-machines; and it consists in a sliding metallic journal-box having projecting flanges along its inner and outer edges; and, also, in a metallic journal-box having a projection extending outside of the frame, and provided with a projecting support or bearing for the driving-gear; and in the combination of parts, as will be hereinafter more fully set forth.

In the annexed drawings, which fully illustrate my invention, Figure 1 is a front elevation of a wringing-machine embodying my invention. Fig. 2 is a transverse vertical section of the same. Fig. 3 is a longitudinal section through one end of the machine. Fig. 4 is a perspective view of the metallic journal-box.

A A represent the standard or side pieces, connected at the top by a cross-bar, B, and at the front and rear by other bars or boards, B′ B′, forming the frame of the wringer. At the foot of the frame is the clamp C, for fastening the wringer to the tub. D is the cross-bar on top of the journal-boxes, and on top of which lies the spring G, actuated by the set-screw E. These parts are all constructed and arranged substantially in the same manner as is usual in wringing-machines.

H H′ represent, respectively, the upper and lower rollers of the wringer, the lower roller H′ having its journals *a* resting in the side pieces or standards A, while the journals *b* of the upper roller H have their bearings in journal-boxes sliding in said standards.

At one end an ordinary half-box, I, is placed on top of the journal *b*, said half-box being on its edges provided with vertical ribs or guides, which fit in corresponding grooves in the standard. The journals at this end of the machine are connected by cog-gears J J, as shown. At the other end of the machine is a metal journal-box, L, sliding in the standard, and the journal *b* is placed in a bearing, K, within said sliding box.

It has been found in practice that when no other means are used to keep the moving metal journal-box L in place than ribs or tongues on the sides of the box, which work in grooves in the frame or standard, when the great pressure that is necessary for wringing is applied to the steel spring G, which, when compressed, is lengthened, it crowds the journal-box outward, which, together with the strain in working the crank, often splits the standard.

To obviate this difficulty I provide the metal journal-box L with vertical side flanges *d d* at the inner end, which flanges work on the inner surface or surfaces of the standard, and thus have the entire thickness of the standard to resist the outward pressure of the spring. On the outside of the journal-box L, I have also provided similar side flanges *d′ d′*, as shown. Although these latter flanges are not really necessary in the practical working of the wringer, as the pressure is always outward, still they are of advantage, as they tend to keep the journal in its proper position.

The movable metallic journal-box L is, on the outside, provided with a downward-projecting arm, $L^1$, from which extends the stud $L^2$, forming a bearing for the purchase or crank pinion P, which meshes with a cog-wheel, R, secured on the journal *b* of the upper roller H.

The crank bearing or support is thus located on a projection of the moving journal-box, which extends outside of the standard or frame. This arrangement admits of the journal of the lower roll being as long as the standard or frame is thick. Should the journal or bearing of the lower roll be cut short, so as to allow the projection $L^1$ of the removable journal-box L to be placed within the standard or frame, the bearing of the roll so shortened would be liable to wear much faster than the other bearings or journals.

In wringers having a purchase-gear arrangement a counter-shaft with connecting gears is ordinary employed to transmit the power to

the rolls; but my present method of applying power first to the upper roll, and through that roll transmit the power to the lower roll by gears from the end opposite that to which the power is first applied, obviates the necessity of using a counter-shaft and its connecting gears without detracting in the least from the merits of the machine, as the double or step gears J, which connect the two rolls, have two rows of long coarse cogs, which allow the rolls to separate sufficiently without disconnecting the gears. One row of cogs, being set alternately with the other row, virtually form a very fine gear, and the finer the gear the less the friction and the smoother and easier they turn. Having these decided advantages, I prefer them to the common or single gears usually used on wringers. This arrangement also makes the wringer both lighter and cheaper than when a counter-shaft with connecting gears is employed.

Having thus fully described my invention, what I claim as new, and desire to secure by Letters Patent, is—

1. In a wringing-machine, a movable metallic journal-box having a projection or projecting arm, $L^1$, extending outside the frame, and provided with a stud or bearing, $L^2$, for the purchase or crank pinion, for the purposes herein set forth.

2. In a wringing-machine, a metallic journal-box provided with side flanges *d d* on the inner side, to bear against the inner surface or surfaces of the standard, and projection $L^1$, with stud $L^2$, substantially as and for the purposes herein set forth.

3. The movable metallic journal-box L, provided with side flanges *d d* and *d′ d′*, and projection $L^1$, with stud $L^2$, substantially as and for the purposes herein set forth.

4. In a wringing-machine, the purchase driving-gear P, mounted on a stud or bearing formed on the arm $L^1$ of the movable journal-box, said box extending outside the frame, in combination with the gear R, of larger size, on the upper roll, the step-gears J J on the opposite side of the frame, and the elastic rolls, substantially as and for the purpose set forth.

In testimony that I claim the foregoing as my own I affix my signature in presence of two witnesses.

NAPOLEON B. PHELPS.

Witnesses:

M. C. MESSERVÉ,

S. T. L'HOMMEDIEU.