Oct. 31, 1967 T. BOX 3,349,943

BOTTLE CARRYING AND STACKING CASE

Filed March 22, 1965 2 Sheets-Sheet 1

Fig. 1.

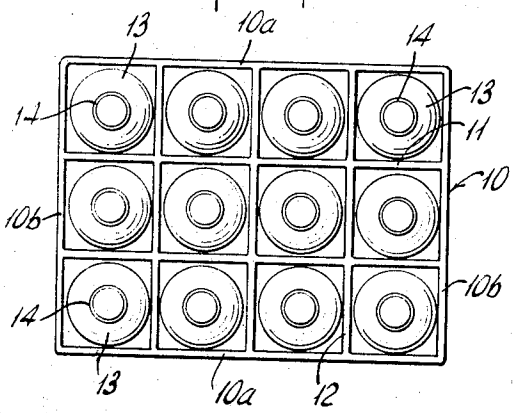

Fig. 3.

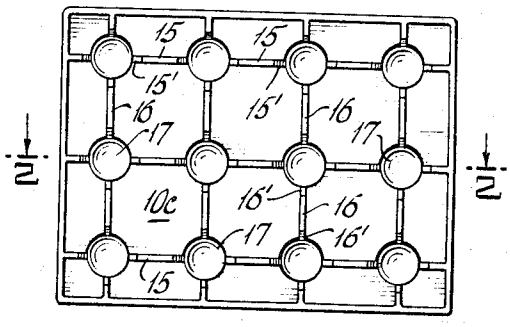

Fig. 2.

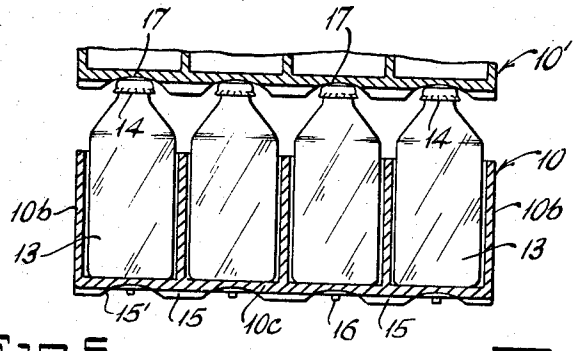

Fig. 5.

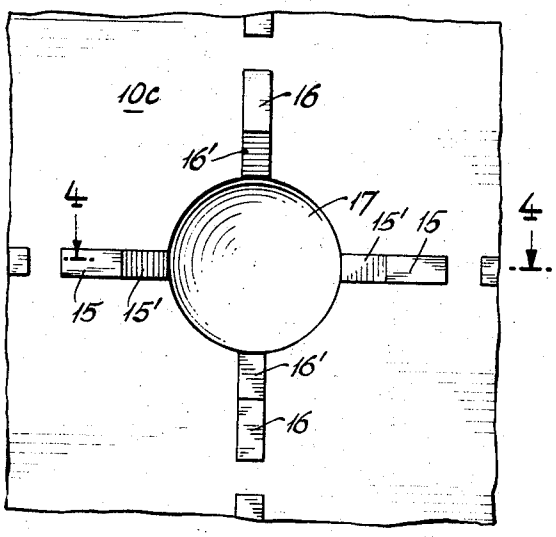

Fig. 4.

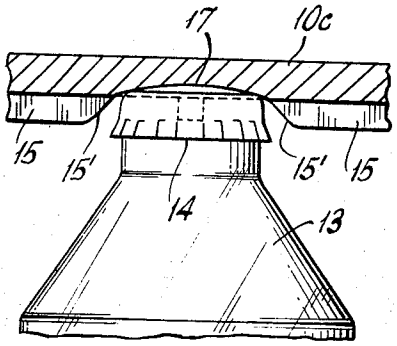

INVENTOR
THEODOR BOX

BY

ATTORNEY

Oct. 31, 1967 T. BOX 3,349,943

BOTTLE CARRYING AND STACKING CASE

Filed March 22, 1965 2 Sheets-Sheet 2

Fig. 6.

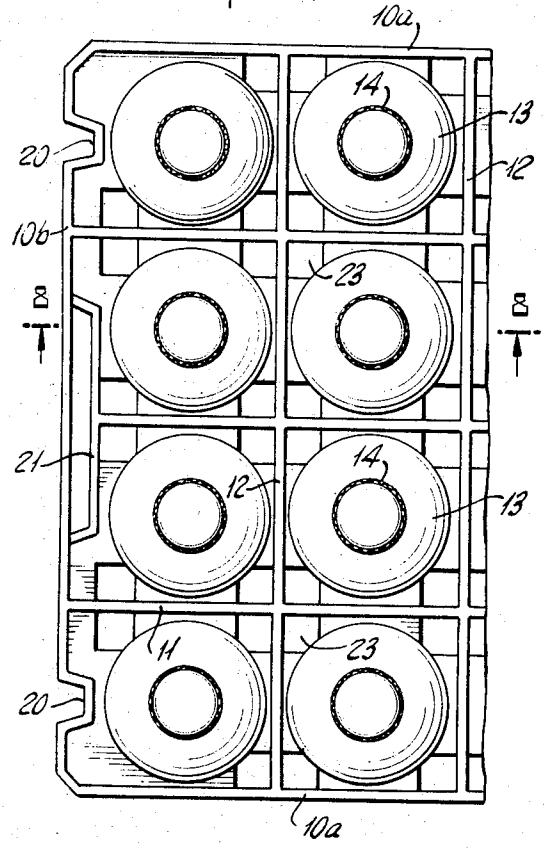

Fig. 7.

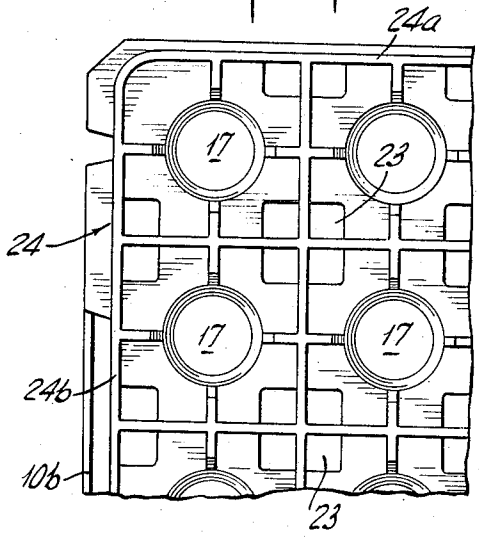

Fig. 9.

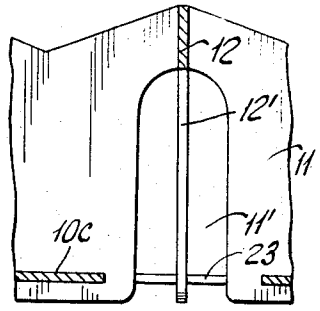

Fig. 8.

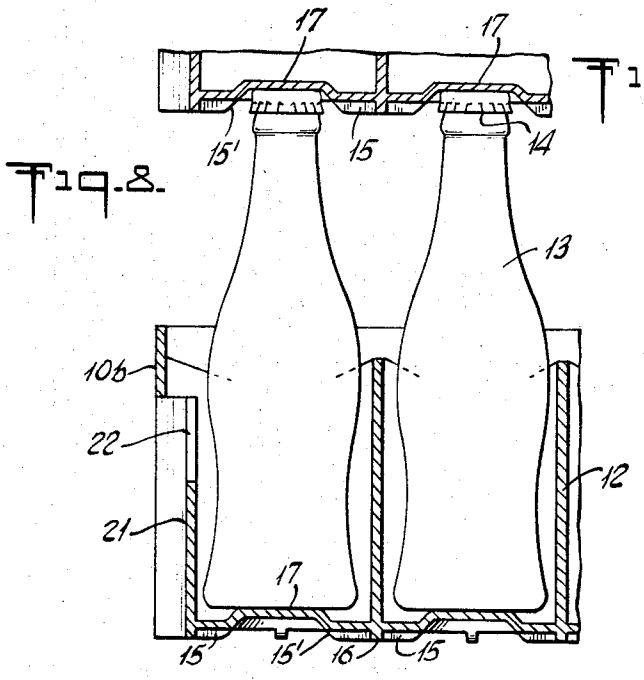

Fig. 10.

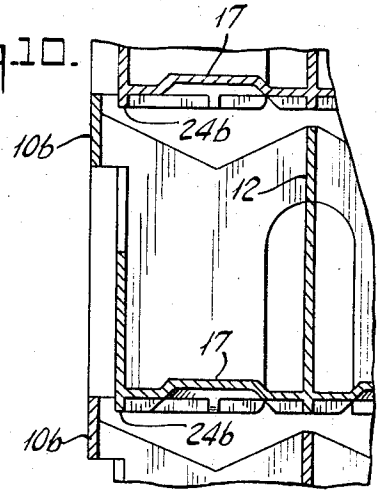

INVENTOR
THEODOR BOX
BY
ATTORNEY

United States Patent Office 3,349,943
Patented Oct. 31, 1967

3,349,943

BOTTLE CARRYING AND STACKING CASE

Theodor Box, Manhasset, N.Y.
(57—102 251st St., Little Neck, N.Y. 11362)

Filed Mar. 22, 1965, Ser. No. 441,436
7 Claims. (Cl. 220—21)

The present invention relates to stackable bottle carrying cases, also known as "tote boxes," preferably though not limitatively to cases of this type molded in a single unitary operation from a suitable high-impact plastic, such as polyethylene, polypropylene, or a similar synthetic resinous thermoplastic or thermosetting material.

More specifically, the invention is concerned with bottle cases for the storage, transport and distribution of beverages, liquid foods and the like substances of the special type, wherein the bottles or the like containers are stored in a preferably compartmentalized case in predetermined relative position, such as in longitudinal and transverse rows, with the tops or caps of the bottles projecting above the upper edges of the side and end walls of the case and coinciding with a horizontal plane, to enable the positioning or stacking thereon of another similar case with the bottom wall of the latter resting upon the tops or caps of the bottles in the case below forming a base or supporting surface.

Beverage bottle cases of the foregoing type have already become known which are provided with means to position one case upon another case, said means consisting essentially in the provision of recesses in the undersurface of the bottom wall of the cases conforming to or being adapted to receive the tops or caps of the bottles disposed in the case immediately below in a stack comprising a multiplicity of cases superposed upon each other. In other words, in the known bottle stacking cases the caps of the bottles completely nest within the recesses of the case immediately above in the stack.

A seriously felt disadvantage and defect of beverage cases of the latter type is due to the necessity of first lifting a case from the case below before it can be safely withdrawn or removed from the stack without the danger of damage to or breakage of the tops or caps of the bottles disposed in the case immediately below the case being withdrawn. While a slight initial lift of the case to be withdrawn has been found to be sufficient to substantially avoid the danger and defects mentioned, practice has shown that this precaution is frequently ignored, especially in the case of unskilled persons of lack or specially trained labor, the more natural urge or tendency being to pull off the cases horizontally from the stack, in such a manner as to involve the danger of ripping off the caps or damaging the tops of the bottles in the case below, resulting thereby in the loss of the materials or liquids stored in the bottles, as well as other defects and drawbacks readily understood. This difficulty is increased considerably, where the bottom walls of the cases are fitted with stiffening ribs or the like projections, such reinforcing means being essential from the point of view of providing adequate mechanical strength and stability of the cases constructed with a minimum wall thickness in the interest of light weight and reduced cost, a main advantage of plastic carrying cases over the known wooden and metal cases of similar character used for the same purpose.

Accordingly, an important object of the present invention is the provision of an improved bottle carrying and stacking case of the referred to type constructed to minimize or substantially eliminate the foregoing and related disadvantages and difficulties inherent in the previously known plastic carrying cases of similar construction according to the prior art.

A more specific object of the invention is the provision of a bottle stacking and carrying case of the referred to type designed to substantially eliminate the danger of breakage of or damage to the bottles upon pulling or withdrawing a case horizontally from the case immediately below in a stack.

Yet another object of the invention is the prevention of breakage of or damage to the bottles while removing a case from a stack of cases in the manner pointed out, substantially without foregoing the advantages of stiffening and reinforcing ribs or the like projections upon the bottom wall of the cases.

The invention, both as the foregoing and ancillary objects as well as novel aspects thereof, will be better understood from the following detailed description, taken in conjunction with the accompanying drawings forming part of this specification and in which:

FIG. 1 is a schematic top view of a bottle case of the type forming the subject of the invention;

FIG. 2 is a section taken on line 2—2 of FIG. 3, showing the improved bottom construction of the case and the stacking of the cases according to the invention;

FIG. 3 is a bottom view of the case shown in the preceding figures;

FIG. 4 is an enlarged fragmentary view of FIG. 2;

FIG. 5 is a bottom view of FIG. 4;

FIGS. 6 and 7 are partial top and bottom view, irrespectively, of a practical form of a bottle carrying and stacking case constructed in accordance with the principles of the invention;

FIG. 8 is a sectional view taken on line 8—8 of FIG. 6, furthermore showing the stacking of two cases upon one another in accordance with the invention;

FIG. 9 is a fragmentary view showing an improved construction of the separating walls of a case according to FIGS. 6 and 7;

FIG. 10 is another fragmentary section view illustrating the stacking of a pair of empty or unloaded cases of the type according to the preceding figures.

Like reference numerals denote like parts throughout the different views of the drawings.

With the foregoing objects in view, the invention, according to one of its aspects, involves essentially the provision of a bottle carrying and stacking case of the referred to type comprising a pair of side walls, a pair of end walls, and a bottom wall having a substantially smooth outer surface provided with a multiplicity of preferably spherical-shaped and relatively shallow dish-shaped depressions or recesses, said depressions being distributed over said surface or relatively aligned and spaced from each other such as to register or coincide with the tops or caps of the bottles stored in a case below upon which the first case is to be positioned or stacked. The depressions, serving merely as locating or aligning means for the upper case of the stack, are insufficient to retain the cases in the stacked position independently of or free from the effects of vibrations and the like impact and other forces to which the cases and bottles stored therein are subjected during handling and shipping.

For the latter use and purpose there are provided, in accordance with the improvements of the present invention, special retaining means in the form of sets of discreet retaining ribs or projections extending radially outwardly from the periphery of said ribs and having wedge-shaped inner end portions forming ramps of gradually increasing height from a point near said periphery to the full height of the ribs. Four such retaining ribs enclosing angles of 90° and extending in directions parallel, respectively, to the side and end walls of the case have been found to produce satisfactory results in practice in locating and retaining a case positioned upon the caps or tops of the bottles stored in the case below of a stack, while sub-

stantially eliminating the drawbacks and defects mentioned inherent in the prior case constructions of this type. With specific reference to the latter feature of the invention, if a case constructed in the manner described is pulled off or withdrawn horizontally from the case below in a stack, the aforementioned ramps in camming with the edges of the tops or caps of the bottles stored in the lower case result in the case to be lifted slightly, to thereby facilitate its ready and easy removal substantially without the dangers mentioned of damaging or breaking of the bottles and, in turn, loss of the contents stored, as well as other drawbacks and difficulties.

According to an improved feature of the invention, the retaining ribs may be continuous or throughgoing from depression to depression, to additionally act as reinforcing or stiffening means of the bottom walls of the cases, to thereby increase the mechanical strength and stability of the cases and to enable a reduction of the wall thickness to a minimum. In other words, there may be provided sets of intersecting longitudinal and transverse reinforcing ribs projecting from the substantially smooth bottom walls of the cases, said ribs being interrupted to provide gaps bridged by the depressions in said wall and formed with wedge-shaped end portions or ramps merging into said depressions in the manner pointed out.

For certain uses and applications the depressions in the bottom walls of the cases may be dispensed with, in which case the radial retaining ribs encircling spaced circular areas of the bottom wall serve both as locating and retaining means of a case positioned upon the tops of the bottles in a lower case of a stack, in the manner as will become further apparent from the following description in reference to the drawings.

Referring more particularly to FIGS. 1–3, there is shown collectively by the numeral **10** a simple compartmentalized carrying case having a pair of side walls **10***a*, a pair of end walls **10***b* and a bottom wall **10***c*, said case being fitted with sets of intersecting partition or separating walls **11** and **12** for the positioning therein and storage of a multiplicity of beverage containers or bottles **13** having tops or caps **14** which project above the upper edges of said side and end walls and coincide with a horizontal surface adapted to serve as a base or support for another similar case **10′** to be positioned or stacked upon the case **10**, in the manner shown in FIG. 2. In order to align and retain the case **10′** upon the case **10** immediately below in the stack, the outer surface of the bottom wall **10***c* of the case is provided, in the example shown, with a multiplicity of spaced and relatively shallow spherical or dish-shaped depressions or recesses **17** (see also FIGS. 4 and 5) from the peripheries of which extend a number of radial retaining ribs or projections, preferably four ribs for each depression being parallel to the side and end walls **10***a* and **10***b* of the case, as shown at **15** and **16** respectively, in the drawing. The inner end portions of the ribs **15** and **16** adjoining the depressions **17** have a gradually decreasing height in the direction towards said depressions, whereby to form inclined surfaces or ramps **15′** and **16′**, respectively.

The incline angle of the ramps **15′** and **16′** may be suitably chosen, such as about 45°, whereby to result in the camming of the edges of the tops or caps **14** of the bottles **13** with said ramps upon horizontally pulling or withdrawing the upper case **10′** from the case **10**, in such a manner as to cause a slight lifting of the case being withdrawn and to enable its easy and ready removal substantially without involving the danger of damage to or breakage of the bottles or other containers.

While it may be advisable to have the recesses or depressions **17** designed to merge gradually into the ramps **15′** and **16′**, the incline angle of the ramps **15′**, **16′** may be chosen independently of the depressions **17**, while the latter may be of any suitable shape or depth insufficient to retain the bottles, or to serve as positioning or aligning means therefor only. In certain uses or applications, the depressions **17** may be omitted and the angle of the ramps **15′** and **16′** designed to cause the ribs **15** and **16** to act both as aligning and retaining means for the case **10′** in its relation to case **10**, and to enable the smooth withdrawal of the former case without the previously mentioned danger and difficulty, in a manner readily understood from the foregoing. Advantageously, the ribs **15** and **16** may extend over the entire length and width, respectively, of the cases, being interrupted only at the spaces of the recesses **17**, in the manner shown in FIG. 3.

Referring to FIGS. 6–10, there is shown a practical form of a carrying and stacking case constructed according to the invention, wherein the end walls **10***b* are provided with a pair of outer vertical and inwardly directed stiffening channels or corrugations **20** and a central recess **21** in the lower part of said walls, to provide room for a pair of hand or carrying holes **22**. Besides, in order to further reduce the weight of the case and to enable easy cleaning or washing of the cases, openings **23** are advantageously provided in the bottom wall **10***c* adjoining the intersection prints of the partition or separating walls **11** and **12**. As a result of the relatively small wall thickness, the recesses **17** in the bottom wall in the example illustrated, are in the form of a dish-shaped depressions of said wall, as shown more clearly in FIG. 8.

In order to save additional material and to further reduce the weight of the cases, the partition walls **11** and **12** may be provided with vertical recesses or cut outs **11′** and **12′** respectively, adjoining the openings **23**, as shown in FIG. 9.

The bottom wall **10***c* is advantageously provided with a rectangular ridge **24** having side sections **24***a* and end sections **24***b* adjoining and being spaced from the outer edges of the case to enable stacking of two empty or unloaded cases with the ridge of the upper case nesting with the top edge of the lower case in a stack, in the manner shown in FIG. 10. In the latter, only the ridge sections **24***a* (not seen in the figure) nest with the edges of the side walls **10***a*, in a manner readily understood.

While the invention has been described with specific reference to a storage and stacking case for bottles it is understood that the containers stored may be of any other type subject to damage by excessive impact or the like forces. The term bottle as used for the purposes of the specification and claims is, accordingly, intended to include all equivalent types of containers for the storage and shipping of liquid or the like substances.

In the foregoing the invention has been described in reference to a specific illustrative case construction or example. It will be evident, however, that variations and modifications, as well as the substitution of equivalent elements or parts for those shown for illustration, may be made in accordance with the broader spirit and scope of the invention as set forth in the appended claims. The specification and drawings are accordingly to be regarded in an illustrative rather than in a restrictive sense.

I claim:

1. In a stackable bottle carrying case comprising in combination:

(1) a pair of side walls, a pair of end walls, and a bottom wall, said case adapted for the storing therein in predetermined relative position of a multiplicity of equal-sized bottles with the tops of said bottles projecting above the open top of the case to enable the stacking of one case upon the tops of the bottles stored in the case below of a stack of cases,

(2) said bottom wall having a substantially smooth outer surface provided with a multiplicity of relatively shallow dish-shaped recesses spaced from each other and distributed over said surface such as to register with and engage the tops of the bottles stored in the case below of a stack, whereby said recesses act as aligning means of the cases stacked upon each other, and

(3) a plurality of retaining ribs integral with said bot-

tom wall and extending radially outwardly from the peripheries of each of said recesses,

(4) said ribs having inner end portions adjoining said peripheries of a height gradually decreasing to zero in the direction of the recesses,

(5) whereby to form radially extending ramps encircling the tops of the bottles in the case below of said stack, to thereby cause a case to be slightly lifted upon being pulled horizontally off a lower case of a stack by camming action of said ramps with the edges of said bottle tops.

2. A bottle case as claimed in claim **1**, said retaining ribs being mutually spaced by angles of 90° and extending in directions parallel to the side and end walls, respectively, of the case.

3. A bottle case as claimed in claim **1**, said retaining ribs being mutually spaced by angles of 90° and extending in directions parallel to the side and end walls, respectively, of the case, and the outer ends of the aligned ribs extending from adjoining recesses being interconnected, to form sets of intersecting throughgoing reinforcing ribs upon said bottom wall interrupted by gaps bridged by said recesses.

4. A bottle case as claimed in claim **1**, including sets of intersecting partition walls for the positioning of the bottles in predetermined longitudinal and transverse rows within the case.

5. A stackable bottle case comprising in combination:

(1) a pair of side walls, a pair of end walls, and a bottom wall, said case adapted for the storing therein in predetermined relative position of a multiplicity of bottles with the tops of the bottles projecting above the open top of the case, to enable stacking of one case upon the tops of the bottles stored in the case below of a stack of cases,

(2) a plurality of sets of retaining ribs corresponding to the number of bottles stored and projecting from the substantially smooth outer surface of said bottom wall,

(3) each of said sets comprising a predetermined number of ribs extending radially outwardly from the periphery of a circular area with the areas enclosed by the different sets of ribs being spaced from each other and distributed over said surface such as to substantially register with and to engage the tops of the bottles stored in the case below of said stack,

(4) said ribs having inner end portions adjoining the peripheries of said areas of a height gradually decreasing to zero in the direction of said areas,

(5) whereby to form a plurality of radial ramps encircling the tops of the bottles in the case below of said stack, to thereby cause a case to be slightly lifted upon being pulled horizontally off a lower case in a stack by camming action of said ramps with the edges of said bottle tops.

6. A bottle case as claimed in claim **5**, said retaining ribs being mutually spaced by angles of 90° and extending in directions parallel to the side and end walls, respectively, of the case.

7. A bottle case as claimed in claim **5**, said retaining ribs being mutually spaced by angles of 90° and extending in directions parallel to the side and end walls, respectively, of the case, and the outer ends of the aligned ribs extending from adjoining areas being interconnected, to form sets of throughgoing intersecting reinforcing ribs upon the bottom wall of said case interrupted by gaps bridged by said areas.

References Cited

UNITED STATES PATENTS

2,535,493	12/1950	Gerber.	
3,092,284	6/1963	Stout	220—21

THERON E. CONDON, *Primary Examiner.*

GEORGE E. LOWRANCE, *Examiner.*