Nov. 5, 1929. M. L. NELSON 1,734,948

TESTING APPARATUS

Original Filed April 22, 1927 6 Sheets-Sheet 1

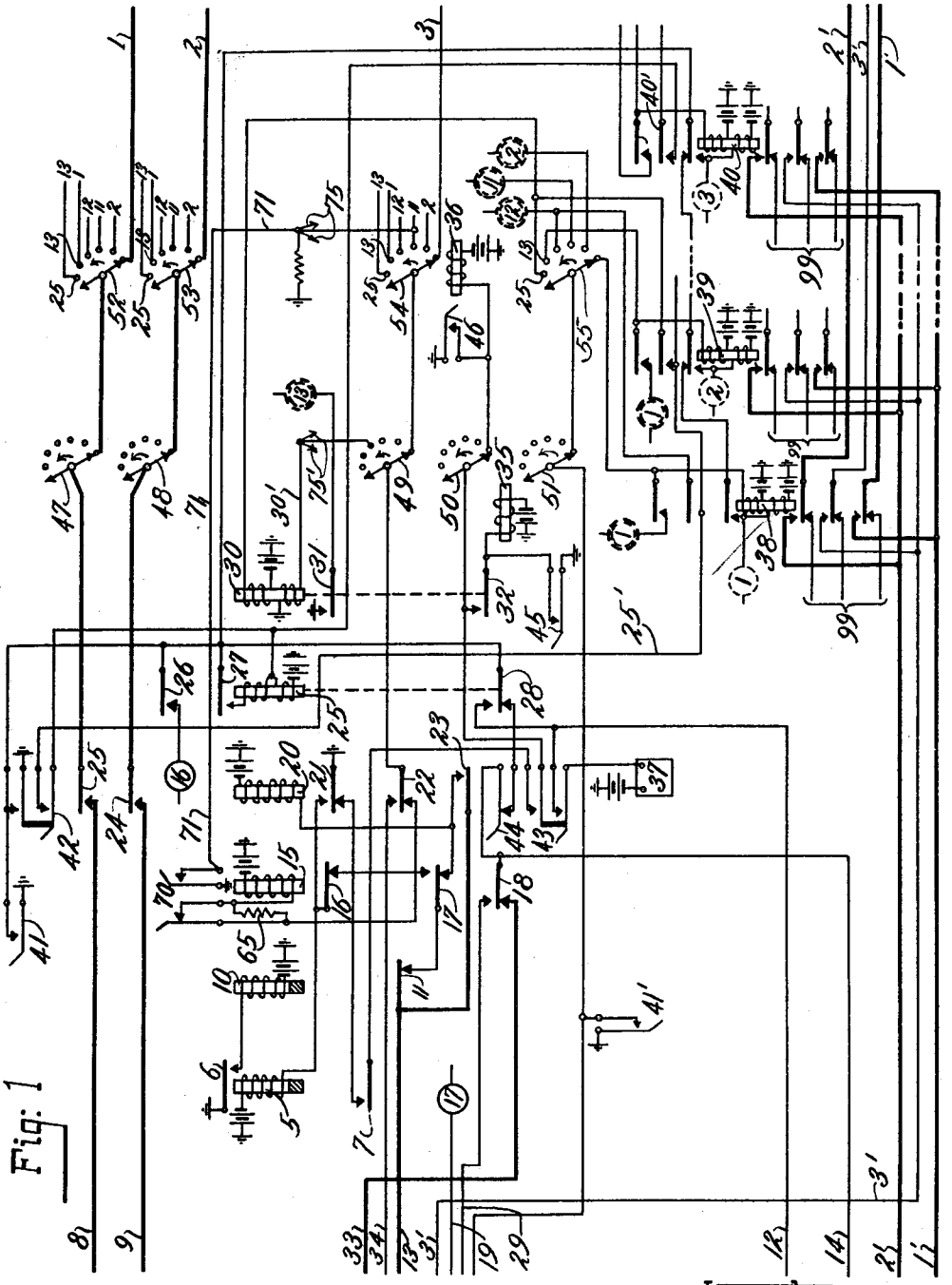

Fig. 1

Inventor
Martin L. Nelson

Wm. Walter Owen. Atty.

Nov. 5, 1929. M. L. NELSON 1,734,948

TESTING APPARATUS

Original Filed April 22, 1927 6 Sheets-Sheet 2

Fig. 2

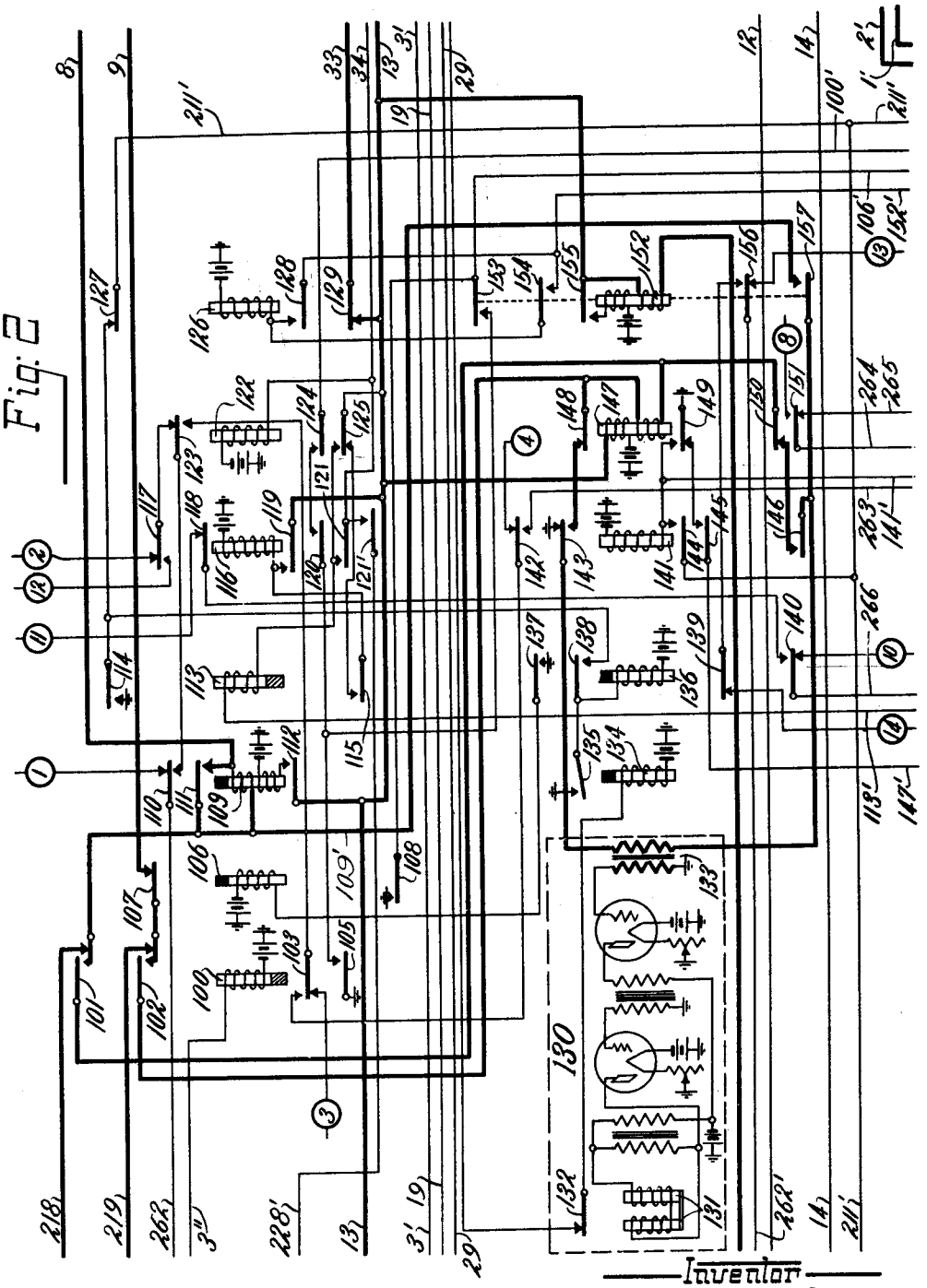

Inventor
Martin L. Nelson
Wm. Walter Owen Atty

Nov. 5, 1929. M. L. NELSON 1,734,948

TESTING APPARATUS

Original Filed April 22, 1927 6 Sheets-Sheet 3

Fig. 3

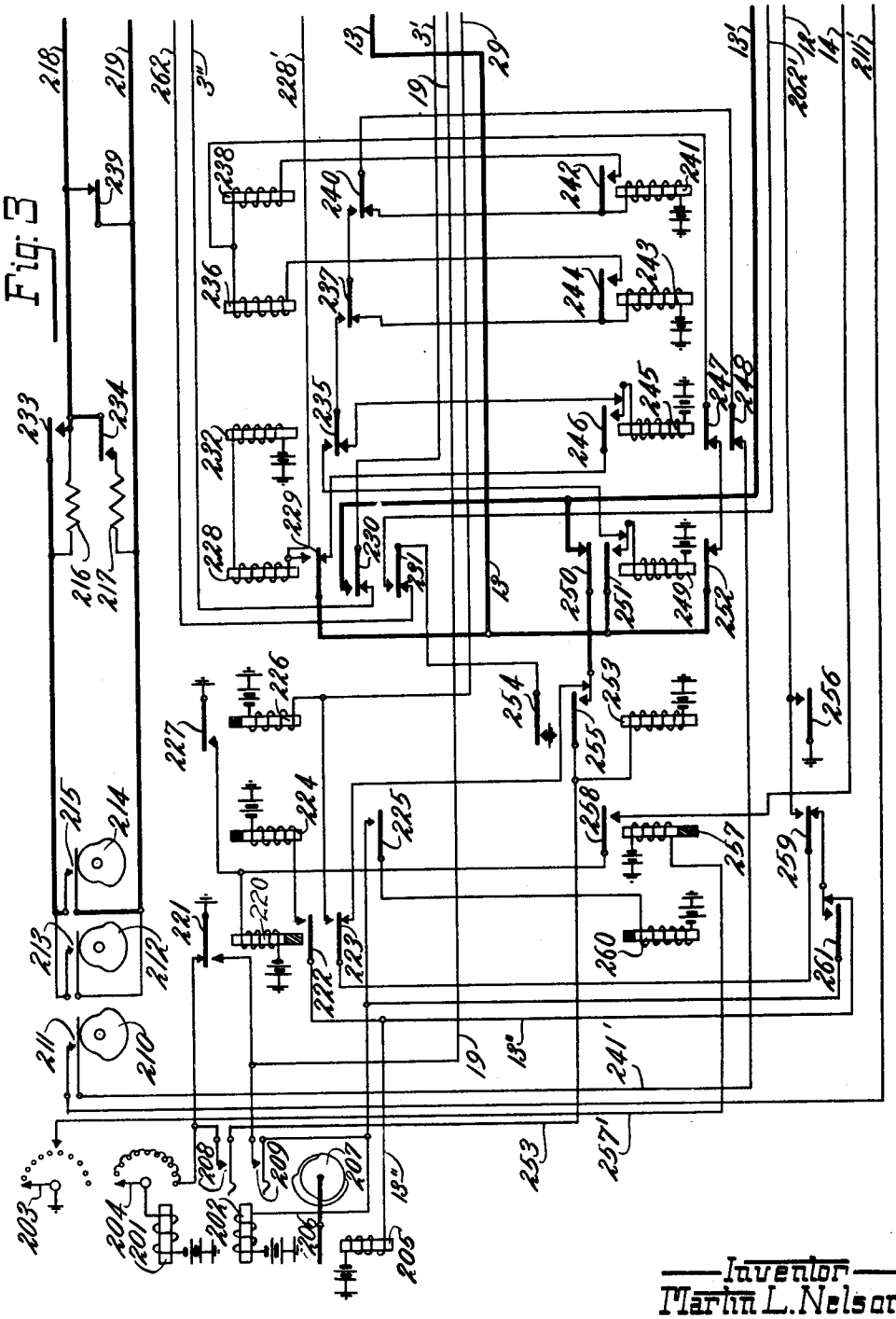

Inventor
Martin L. Nelson
Wm Watts Quew. Atty.

Nov. 5, 1929. M. L. NELSON 1,734,948

TESTING APPARATUS

Original Filed April 22, 1927 6 Sheets-Sheet 4

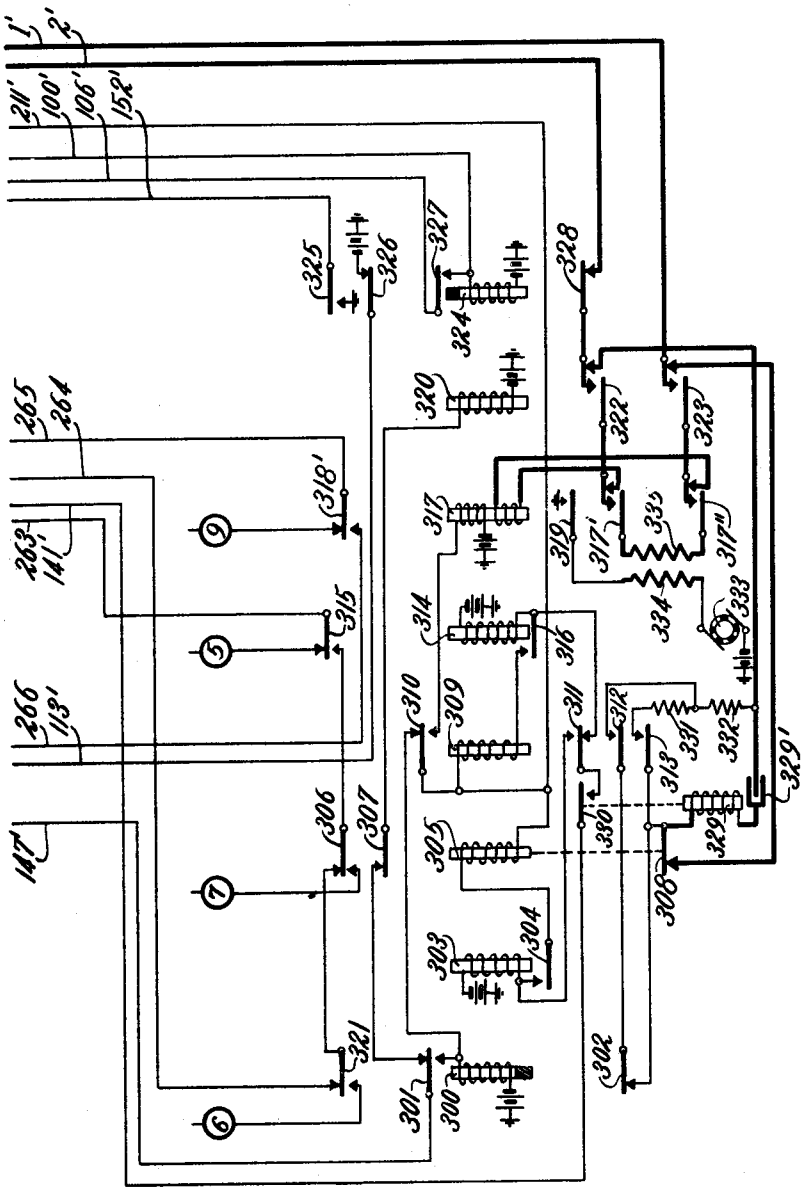

Fig. 4

Inventor
Marin L. Nelson
Wm Walter Durw. Atty.

Nov. 5, 1929. M. L. NELSON 1,734,948

TESTING APPARATUS

Original Filed April 22, 1927 6 Sheets-Sheet 5

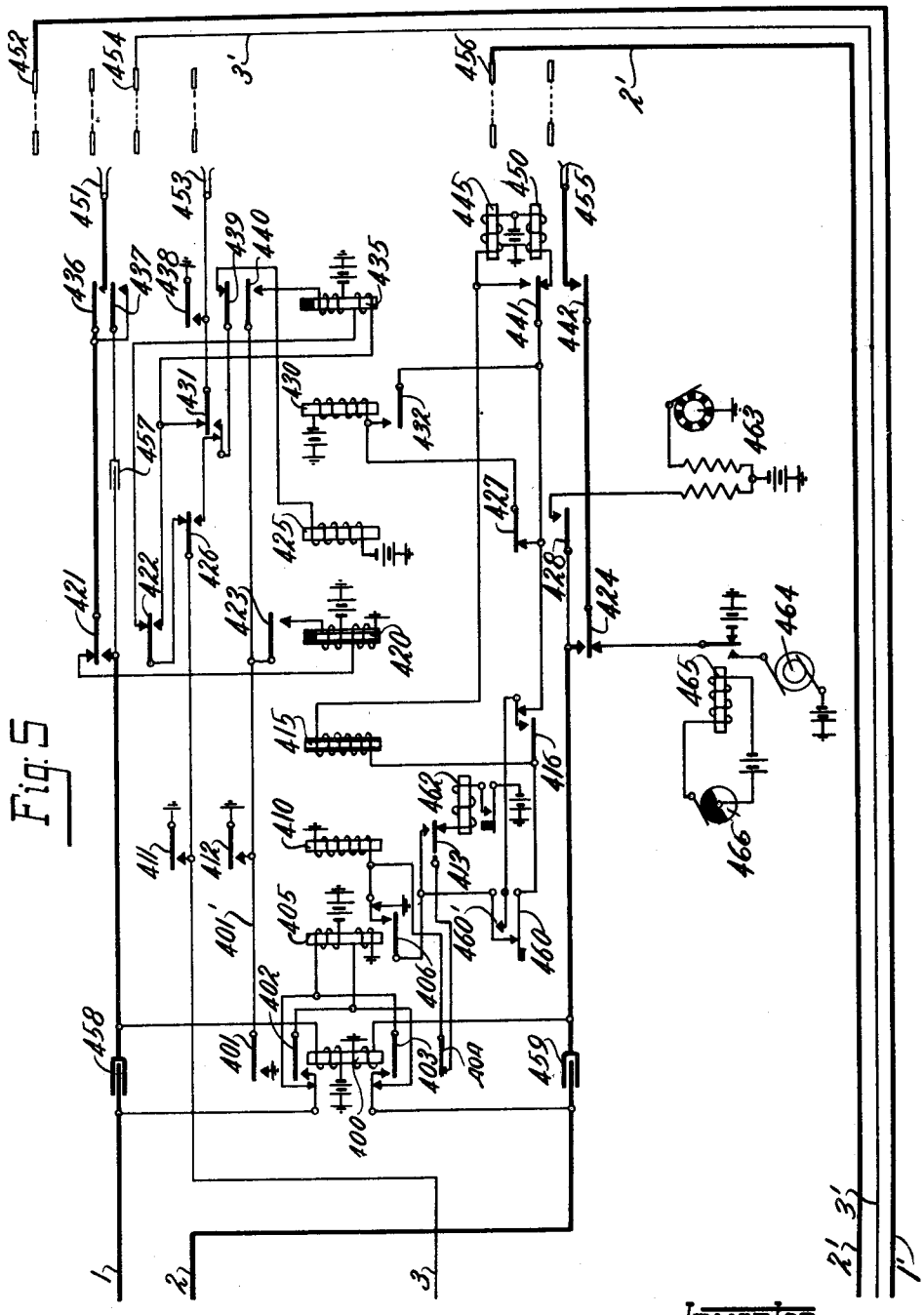

Fig. 5

Inventor
Martin L. Nelson
Wm. Walter Owen. Atty.

Nov. 5, 1929. M. L. NELSON 1,734,948

TESTING APPARATUS

Original Filed April 22, 1927 6 Sheets-Sheet 6

Fig 6

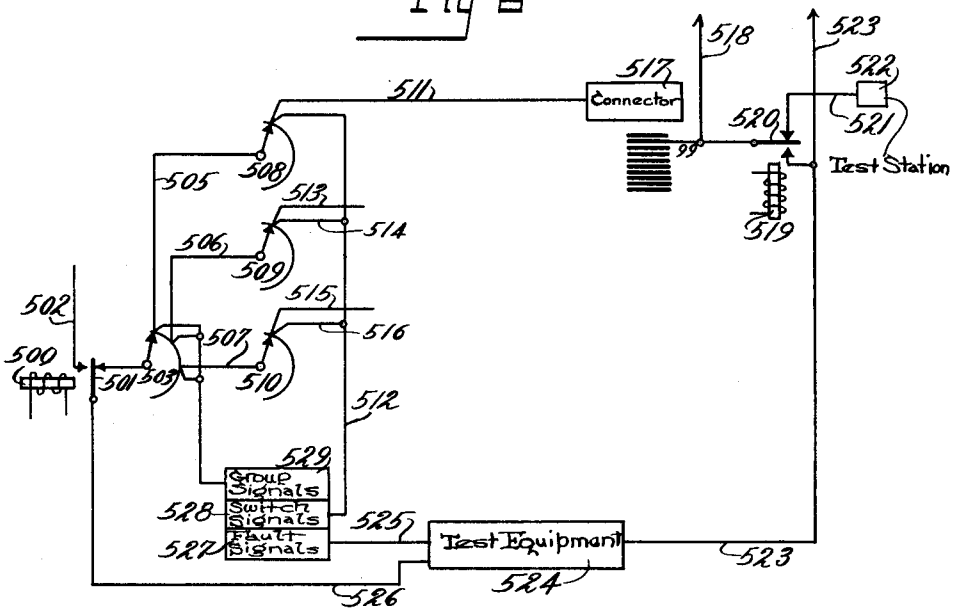

Fig. 7

FIG. 3	FIG. 2	FIG. 1	FIG. 5
	FIG. 4		

Inventor
Marlin L. Nelson
Wm Watts Crew. Atty

Patented Nov. 5, 1929 1,734,948

UNITED STATES PATENT OFFICE

MARTIN L. NELSON, OF PARK RIDGE, ILLINOIS, ASSIGNOR TO RESERVE HOLDING COMPANY, OF KANSAS CITY, MISSOURI, A CORPORATION OF DELAWARE

TESTING APPARATUS

Application filed April 22, 1927, Serial No. 185,882. Renewed March 28, 1929.

The invention, broadly stated, relates to novel testing equipment for telephone exchanges. More particularly, the invention is concerned with equipment for testing the functions of connector switches used in automatic telephone systems.

The principles involved, and the operations of switches used in automatic telephone systems are well known in the art and will not be discussed in this specification. However, by way of explaining the term "connector" it may be stated that this term is generally applied to a switch which has direct access to terminals of subscribers' lines. Such a switch is operated in accordance with the last two series of impulses generated at a calling subscriber's substation, the series corresponding to the tens and unit digits of the called party's telephone number.

It is imperative to good service that the connectors in an exchange be kept in first class condition so that their performance will be accurate and reliable. The best known way of keeping such equipment in reliable order is by routining it, that is, by frequently applying characteristic tests, which, if properly executed indicate that the equipment is functioning properly. A connector has many functions to perform, and, in order to definitely determine that the mechanism and the circuits are performing all their functions properly, a large number of separate tests must be included in the routine. If these tests are applied manually, a considerable period of time is required for testing each connector and the maintenance costs are therefore unduly high.

Accordingly, the principal object of this invention is the provision of a routine test equipment which will automatically routine the connectors in an exchange without attendance, other than that required to start the equipment and to record and repair the faults found.

A further object is to provide a testing equipment which seizes each connector in its consecutive order, applies a series of functional tests to it and, if these tests are properly completed, releases the connector to common usage and seizes the next, to which the same tests are applied.

Another object of this invention is to provide a test equipment which is arranged to camp or not to camp on a busy connector. If a connector is engaged in a call between two subscribers the equipment may be set to either camp on this busy connector and to wait with the application of the tests until the connector is freed again, or the equipment may be set to omit the busy connector and to take the next connector in consecutive order.

A still further object of this invention is to provide a testing equipment arranged to apply a large number of functional tests to each connector, and still further arranged so that it changes from one test to another after the former test has been applied and satisfactorily completed.

A still further object of this invention is to provide a testing equipment, which, when a fault is found will indicate which connector defaulted, and the exact nature of the fault, and which will hold the connector while a signal is operated to summon the attendant to the equipment to inform him of the fault found in the connector.

A further object of this invention is to provide a test equipment which will exercise a connector, that is, repeat the same series of functional tests on a connector indefinitely, to make sure that the mechanism functions properly.

The test equipment is set to execute the various tests, by means of keys operated in certain combinations.

Other objects of this invention which are not specifically enumerated above will be apparent from the detailed description and claims which follow:

The drawings comprising Figs. 1 to 5, inclusive, when arranged as shown in Fig. 7, show sufficient details for a clear understanding of the construction and operation of the invention.

Fig. 1 shows part of the test equipment, comprising two distributing switches, the operating magnets of which are designated by the reference numerals 35 and 36, respec-

tively. This figure shows also in the upper right-hand corner of the drawing conductors designated 1, 2, and 3 which terminate in a connector. In the lower left-hand corner are shown three conductors designated 1′, 2′, and 3′. These conductors are the line and release conductors coming in from a connector which is being tested. The other equipment shown in this drawing consists of various keys by means of which the equipment is set to execute the tests; a number of visual signals, and various relays. The operation of this equipment will be described presently.

Fig. 2 shows relay equipment; visual signals, and part of an amplifier designated 130.

Fig. 3, shows various relays and other apparatus belonging to the test equipment which will be described later. However, it may be stated at this point, that the cams designated 210, 212, and 214 belong to a varying machine as is disclosed in the patent to H. F. Obergfell No. 1,523,036 of January 13, 1925. As is explained in this patent, the object of a varying machine is to operate switches through various resistances and line leakages in order to properly margin the switches so that they will operate satisfactorily. The varying machine disclosed in this patent is of course modified somewhat to work in connection with the testing equipment disclosed in the present invention. In the left-hand upper corner of Fig. 3 is also shown a rotary switch 200 having an operating magnet designated 202 and a release magnet designated 201. There is further shown a magnet designated 205 which is adapted to operate an armature 206 and thereby cams 207. The cams are adapted to operate contacts 208 and 209 in a certain sequence. The purpose and operation of the switch and of the magnet 205 will be described more in detail subsequently.

In Fig. 4 are shown various relays and signals belonging to the testing equipment.

Fig. 5 shows a connector. This connector is disclosed in the application of R. F. Stehlik, Serial No. 716,577, filed May 29, 1924, which may be consulted for details. It will be assumed presently that this connector is being tested by the equipment shown in Figs. 1 to 4, inclusive.

Fig. 6 shows a schematic layout of the test equipment, illustrating the relation of this equipment to the connectors in an automatic telephone exchange.

Fig. 7 is a diagram showing the relation of Figs. 1 to 5, inclusive.

Before starting the detailed description of the operation, it will be advisable to make a few explanatory remarks concerning the layout and the operation which will assist in the understanding of the detailed explanation.

It has been remarked elsewhere that a series of functional tests is applied to a connector. These functional tests consist in selecting a connector and of operating this connector under somewhat severer conditions than those encountered in practice. Each function of the connector is checked by the testing equipment and if one of the functions is not executed properly, the connector is held, and a signal is operated to summon the attendant and to inform him of the fault.

It is a well known practice in automatic telephone exchanges to reserve a certain number for test purposes. This number is usually number 99, and is, of course, reserved for official use. When this number is selected, the calling party will be connected to a telephone which may be located at the wire chief's office. A connector may be tested by dialing number 99, and thereby connecting with the telephone of the wire chief. It is obvious that number 99 has been chosen in order to subject the connector to a maximum number of vertical and rotary operations. This test number has been utilized in the present invention. When the number is dialed from an ordinary station, the caller will be connected to the wire chief's apparatus; however, when the test equipment selects number 99, the wire chief's substation will be disconnected and the connection will be switched to the test equipment in order to check the functions of the connector. In other words, the test equipment is adapted to automatically call number 99 and to extend the connection to its own equipment in order to check and to report the result of the operations of the connector.

When the drawings Fig. 1 to Fig. 5, inclusive, are arranged as shown in Fig. 7 the complete connection including the connector shown in Fig. 5 can be plainly seen by following the heavy conductors extending through the upper parts of Figs. 3, 2, 1, and 5, and back from Fig. 5 through the lower part of Fig. 1, and Fig. 2 to Fig. 4.

Depending upon the size of the exchange, there may be a great number of connectors. If desired, the test equipment will test all connectors in an exchange in their consecutive order. This is done by using primary and secondary distributors and will now be explained briefly with reference to the schematic layout shown in Fig. 6.

Fig. 6 shows a primary distributor designated 503 which is connected over an armature 501 of a relay 500 to the test equipment designated 524. The primary distributor 503 has access to twenty-five secondary distributors, some of which are shown in this drawing and designated 508, 509, and 510. Each of the secondary distributors has access to twenty-five connectors. One of these connectors is designated 517 and shown accessible to the secondary distributor 508. Utilizing the arrangement shown in Fig. 6, the primary distributor 503 will have access

to six hundred twenty-five connectors. Since the primary distributor 503 is connected to the test equipment 524 over a conductor 526, the test equipment 524 is able to test six hundred and twenty-five connectors.

It is obvious that the number of connectors accessible to the test equipment can easily be doubled or trebled by adding change-over relays such as the relay 500. If a change-over relay, such as the relay 500 is used, it will be seen that, after the first six hundred and twenty-five connectors are tested through, the relay 500 may be energized to switch the test equipment 524 to another primary distributor such as 503 which again has access to 25 secondary distributors such as 508. Thus, the number of connectors accessible to the test equipment 524 can be readily increased.

At the right of the connector 517 is shown a relay 519 which is adapted to operate an armature 520. In its normal position, the armature 520 maintains the terminals of number 99 connected with a test station 522. This test station is the one which is usually located in the wire chief's office. Conductor 518 leads to other connectors. Thus, all connectors have access to the wire chief's test station 522. Relay 519 is provided for one group of connectors.

When the test equipment establishes connection with number 99, the group relay 519 will be operated, to disconnect the test station 522 and to complete the connection back to the test equipment.

The rectangular sections 527, 528 and 529 represent various signal lamps or other visual signals operating in connection with the test equipment 524.

It will be seen that the section 529 is connected with terminals accessible to the primary distributor 503. This section 529 comprises group signals. Whenever a primary distributor such as 503 is operated into connection with a secondary distributor, the corresponding group signal in section 529 will be operated to indicate the group the test equipment has established connection with.

The section 528 includes switch signals and is connected, over conductor 512 with the secondary distributors. When a secondary distributor engages a connector, the corresponding signal in section 528 will be operated.

Section 527 includes fault signals. When the test equipment discovers a fault in a connector, the test will be stopped, and a signal in section 527 will be operated to denote the precise nature of the fault.

It may be mentioned at this point that these signals may be lamps or drops, or any known kind of signal apparatus applicable in the present case. The signals will be referred to as signal lamps.

Briefly the operation is as follows: Depending upon what kind of test is desired, certain keys are operated to start the test equipment. The primary and the secondary distributors are rotary switches, and, having no normal position, are normally in engagement with contacts leading to a connector switch. If it is desired to start the test from a certain connector, there are provisions, as will be seen presently, to operate the distributor switches into connection with this connector.

Assuming that the test equipment has been started, the series of tests will be applied to the connector engaged with, depending upon whether this connector is busy or idle. If the connector is busy, the application of the tests will be deferred. There are, however, provisions to skip a busy connector. When the connector becomes idle within a certain time, the series of functional tests will be applied in rapid succession, whereupon the connector, if found in proper working order, is released to common usage. The secondary distributor then engages the next connector in the group and the tests are applied to this switch. While the test is in progress, group signals in section 529, and switch signals in section 528 indicate what switch is being tested. When a fault is found, the corresponding fault signal in section 527 will be operated and the test will be stopped until the office attendant notices the trouble and releases the test equipment to normal.

Referring to Fig. 1 there are shown in the lower right-hand corner of the drawing three relays designated 38, 39 and 40. These relays belong to certain groups, each corresponding to a switching relay such as 519 shown in Fig. 6. The energization of these group switching relays depends on the operation of the distributor switches. The wipers of the primary distributor switch are designated 47 to 51, inclusive, and the wipers of the secondary distributor switch are designated 52 to 55, inclusive. Reference numeral 35 indicates the motor magnet of the primary distributor and 36 designates the motor magnet of the secondary distributor. The keys 45 and 46 are provided for the purpose of individually stepping the primary and the secondary distributor switches to desired bank contacts. The group signals are designated 1, 2, and 3, in heavy dotted circles. The switch signals are designated 1 to 12, and 1 to 13, respectively, the numerals being shown in double circles. These latter designations will now be explained a little more in detail.

In the example illustrating the invention, it is assumed that a connector switch frame comprises 25 connectors. These connectors are divided in two groups, the first group including connectors numbered 1 to 12, and the second group including connectors numbered 13 to 25. The relay 38 is the group relay for the first group and the relay 39 is the group relay for the second group. These two group

relays are shown fully in operative connection with the test equipment. The group relay 40 which serves a group numbered 3, is shown merely for illustrative purposes and belongs to a further group which may be the last group in the exchange.

If it is assumed that the test is applied to the connector number 1 in group number 1, the group relay 38 will be operated, and the group lamp 1 shown to the left of relay 38 will be lighted. The switch lamp 1 shown above relay 38 in a double dotted circle will also be lighted. The circuit connections will be traced out in detail later on.

In order to explain the functions of the group and of the switch signals a little further, it may be pointed out that wipers 51 and 55 of the distributor switches are shown connected up with the first bank contacts terminating in the group relay 38. When this relay is energized there are circuits established for the signal lamps 1 and 2 over armatures of relay 38. When switch number 1 has been tested, the secondary distributor will move its wipers 52 to 55, inclusive, into engagement with the connector switch number 2. Wiper 55 of the secondary distributor switch will therefore provide a circuit for the switch lamp number 2. The group relay 38 will be kept energized in a locking circuit extending from its lower winding over one of its own contacts and an armature of the group relay 39.

In order not to complicate the drawings unnecessarily, no switch lamps have been shown between the positions 2 and 11 of the secondary distributor. When the twelfth switch has been tested, which is the last switch in group number 1, the secondary distributor moves its wipers to the terminal designated 13. A circuit is thereby provided for relay 39 which serves group number 2. This relay disconnects the holding circuit for group relay 38, in turn locking itself over a contact of the next group relay in a similar manner as was explained in connection with the group relay 38. The group relay 39 also closes a circuit for the switch lamp 1 shown above the group relay 39.

The test has now proceeded to group number 2, and switch number 1. In this second group there are thirteen switches. No connection has been shown between the position 13 (switch number 1 of group 2) and position 25 (switch number 13 of group 2). When the last connector in group 2, which is connector 13 (position 25 of the secondary distributor) is reached, relay 30 will operate, closing its armature 31, and providing thereby a circuit for the switch lamp 13, indicating that connector 13 in group number 2 is being tested.

The splitting of twenty-five connectors, located in one frame, into two groups, is a common practice and has its reason in traffic requirements. For a group of one hundred subscribers there are about ten to twelve connectors necessary to take care of the incoming traffic. In other words in one group of one hundred subscribers ten to twelve subscribers may be called simultaneously. The heavier loaded group receives thirteen connectors and the other group twelve connectors. The number of connectors assumed in the present case, is only necessary in districts having very heavy traffic. Usually, about ten connectors per one hundred subscribers will be sufficient. If a connector frame is only provided with twenty connectors, that is, two groups each having ten connectors, connectors number 11 and 12 in the first group, and connectors number 23, 24, and 25 in the second group will be missing. Such condition is assumed in the eleventh position of the secondary distributor, that is, it is assumed that the eleventh connector in group number 1 is missing. In this case, the private conductor will be connected to ground over a resistance designated 3000. The conductors designated 75 are connected with release conductors of other missing connectors. Whenever a secondary distributor encounters such condition, the test will proceed uninterruptedly.

The purpose of the various keys shown in Fig. 1 will be discussed next. The key designated 41 has the purpose of connecting the test equipment to continually test and retest a certain switch. If it is desired, for example, to subject a certain connector to a continual test, the primary and the secondary distributor switches will be operated into engagement with this connector by means of the manual keys 45 and 46. Then the key 41 will be depressed and the functional tests will be applied to this connector as long as this key remains in operated position. If, during one of the tests a fault is encountered, the equipment will be stopped automatically and the fault will be indicated.

The key 41′ in Fig. 1, will be operated whenever a test is started. This key provides ground for the wiper 51 of the primary distributor and for the relay 134 in Fig. 2, respectively, for reasons which will be apparent as the description progresses.

If the key 41 is operated together with key 43, all switches in the exchange will be tested in consecutive order.

Keys 42 and 43, if operated together, serve the purpose of testing all switches in a certain group.

Key 44, when in operated position will effect the release of the equipment in case it has been stopped either by a fault found in a connector, or by a busy connector, providing the busy condition exceeds a certain time interval.

The key designated 70 when in the position shown in the drawing, will cause the test equipment to camp on a busy connector, and

to summon the attendant after a certain time. If the busy connector becomes free within that time interval, the functional tests will be applied. If it is desired, however, to skip a busy connector, the key 70 will be operated.

The reference numerals 16, 17 and 37 designate signal equipment. 16 and 17 may be ordinary signal lamps or drops, and 37 may be an audible signal, e. g., a buzzer. The signal 16, when operated, indicates that the test has been ended; the signal 17 denotes that a connector is busy, and the audible signal 37 is sounded whenever the attendant is to be summoned to take notice of certain conditions as will be explained presently.

Conductors designated 1, 2, and 3, shown in the right-hand upper corner of the drawing are the line and the release conductors terminating in a connector switch. This connector is shown in Fig. 5 and is the one also disclosed in the application of Rudolph F. Stenhlik, Serial No. 716,577, referred to previously. This connector, aside from being accessible to ordinary selectors as shown in the application referred to, is also accessible over the conductors 1, 2, and 3, to the secondary distributor switch shown in Fig. 1. The connector is assumed to belong to group number 1 and to be the first switch in this group. When the primary distributor switch and the secondary distributor switch are in the position shown in Fig. 1 they will engage the terminals leading to this connector, thereby extending the conductors 8, 9 and 34, to the test equipment provided relay 20 is in operated position. These conductors have been shown in heavy lines in order to distinguish them easily from the rest of the equipment.

The terminals of number 99 of the connector shown in Fig. 5, are normally connected over contacts of the group relay 38 to the test station number 99 as was explained in a preceding paragraph. However, when the connector is seized by the test equipment, the group relay 38 will be in operated position extending the connection to the test equipment as shown. This connection has also been indicated with heavy lines designated 1′, 2′ and 3′, leading to the test equipment shown in Fig. 2.

Referring now to Fig. 2, it will be seen that the line conductors 8 and 9 are shown leading over various armatures and over a winding of a relay 109, to the equipment shown in Fig. 3 by way of conductors 218 and 219. The private conductor 34 is wired to a relay 122 and will be traced later.

The line conductors and the private conductor incoming from a connector which is subjected to a test, which are conductors 1′, 2′ and 3′, are shown branching to Figs. 2 and 4, respectively. These connections will be explained presently.

The remaining equipment shown in Fig. 2 consists of relay 100 to 152, inclusive, the functions of which will be explained in detail as the description progresses. There are also shown fault signals in this drawing, indicated by heavy circles in order to distinguish them more easily. Each signal designates a certain fault and will be operated if such fault is found in a connector. All of these signals are connected to battery. The battery connections have not been shown by the conventional symbol for the sake of simplicity. It may be mentioned at this point that this is also true of the signals shown in Fig. 1, that is, all the signals shown in Fig. 1 are connected to battery.

The equipment shown in the dotted rectangle and designated 130 is an ordinary amplifier having a so-called composite relay 131 and a transformer 133. This amplifier is used for various tests which will be apparent from the detailed description.

Scrutinizing now Fig. 3 somewhat more in detail, it will be seen that the line conductors 218 and 219 are normally connected together over armature 239 of a relay 238, and that they terminate, over a resistance 216, in cam contacts 213 and 215 of a varying machine. There is also shown a resistance 217 which may be bridged across the line conductors over an armature 234 of relay 232 while the resistance 216 will be short circuited by an armature 233 of the same relay.

The cams designated 212 and 214 which operate the contacts 213 and 215, and likewise the cam 210 which is adapted to operate the contacts 211, belong to a varying machine, which, it has been mentioned, is shown in Patent No. 1,523,036. Details of the operation of this varying machine may be looked up in this patent. However, for convenience, the purpose of the cams 210, 212 and 214 and of the resistances 216 and 217 will be briefly described.

The varying machine is provided with a motor for operating the cams 210, 212, and 214. When the test equipment is started, the motor of the varying machine immediately begins to rotate and operates the cams. The operation of these cams is without function until certain relays have operated to start the application of the functional tests to the connector seized by the test equipment. First of all, this connector must be operated into connection with the test number 99. This is done by transmitting to the connector two digits, each digit consisting of nine impulses. Cam 214 is the impulse cam and is rotated by the motor of the varying machine to close the contact 215 fourteen times per second. The connector, in actual practice, operates only with ten impulses per second. The purpose of the test, it will be remembered, is not to subject the connector merely to conditions which are encountered in practice but to subject the connector to abnormal tests which the connector must undergo without defaulting.

Therefore, instead of operating the connector with ten impulses per second, the varying machine will deliver fourteen impulses per second by means of the cam springs 215. The impulse cam 214 will be rotated by the varying machine continually. Therefore, a discriminating means is necessary to determine the number of impulses to be transmited to the connector. This means is the impulse short-circuiting cam 212, which closes the contact 213 whenever the proper number of impulses have been transmitted by the cam contact 215. The cam 210 which operates its contact 211 is provided for the purpose of determining when the impulses are to be effective to operate the connector.

Referring to the resistances 216 and 217, it will be seen that resistance 216 is normally in series with the line conductors 218 and 219. With the relay 232 energized, however, the series resistance 216 will be short-circuited, and resistance 217 will be bridged across the line. The connector will first be operated with the relay 232 deenergized and the resistance 216 in series with the line circuit. This resistance represents the maximum resistance under which the line relay of the connector must operate without defaulting. However, the line relay of the connector must also respond properly in case there is a certain permissible leakage on the line. This leakage is represented by the resistance 217 which will be connected across the line by relay 232.

The rest of the equipment shown in Fig. 3 will be readily understood from the detailed description.

Fig. 4, when arranged below Fig. 2 shows the line conductors 1′ and 2′ coming in from the connector subjected to a test, terminating in the test equipment. These line conductors have been shown in heavy lines and all circuits pertaining to the line conductors have likewise been shown in heavy lines in order to simplify the tracing of circuits. The reference numerals 5, 6, 7, and 9 are signal lamps similar to the signal lamps shown in Fig. 2. 333 indicates a tone machine which is provided for a certain functional test. The interaction of the various relays shown in this Fig. 4 will be made clear subsequently.

The equipment is shown at rest, all relays and other apparatus being in normal position. Throughout the drawings are shown a plurality of ground and battery connections but it will be understood that this has been done merely for convenience of description and that there is only one battery, with one pole grounded, provided in the exchange.

With the above preliminary remarks in mind the detailed description will now be proceeded with. The drawings should be arranged in the order as shown in Fig. 7.

The primary distributor has its wipers 47 to 51, inclusive, connected to the wipers 52 to 55, inclusive, of the secondary distributor. The latter has engaged the first set of contacts, and the wipers 52, 53, and 54 are therefore in engagement with the line conductors 1 and 2 and with the release trunk 3, leading to the connector shown in Fig. 5.

Referring to this connector, it will be seen that the line conductor 1 terminates in the upper winding of the line relay 405, and battery, while the lower line conductor 2 terminates in the lower winding of the line relay 405 and ground. When this conductor is idle, all parts shown in Fig. 5 are in the position shown. When this connector is busy, however, the relay 410 will be energized keeping ground connected to the release trunk 3 by way of its armature 411.

It will be assumed, that the connector shown in Fig. 5 is desired to be subjected to a continual test. This requires the operation of the keys designated 41 and 41′. It will be further assumed, that the test equipment is set to camp on a busy connector, that is, the key 70 is in normal position.

It shall further be assumed that the connector is engaged. Relay 410 is therefore in operated position and ground is connected to the release trunk 3. A circuit will be closed for the operation of relay 15 shown in Fig. 1 as follows: battery, relay 15, closed contact of key 70, armature 22, wiper 49 of the primary distributor, wiper 54 of the secondary distributor, conductor 3, Fig. 5, conductor 3, armature 411 to ground. Relay 15 operates. At its armature 17, relay 15 disconnects relay 20, and at its armature 18 this relay switches the ground provided by key 41 from conductor 33 to conductor 29. The key 41 being in operated position ground is connected now to the conductors 14 and 29 as follows: ground, key 41, armature 28 and its resting contact, closed contact of key 44, armature 18 and its make contact, conductor 29. Conductor 14 is also grounded in a circuit branching off from armature 18.

Tracing the conductors 29 and 14 to Fig. 3 it will be seen that relay 226 is connected to the conductor 29, while the conductor 14 terminates in a normally open contact of relay 257. A circuit is therefore closed for the operation of relay 226. Upon operating, relay 226 closes a circuit at its armature 227 for the operation of relay 220. This latter relay energizes and connects at its armatures 222 and 223 a circuit for the operation of relay 224, which may be traced from battery, winding of relay 224, make contact and armature 222, normally closed contact controlled by armature 261, closed contact and armature 259, armature 223 and its make contact, and to the grounded conductor 29.

The magnet 205 shown at the left side of drawing Fig. 3 is connected in the above circuit parallel to the relay 224. The magnet 205 operates its armature 206, thereby moving the cams 207 towards the contacts 208

and 209. There are two such cams 207, only one having been shown for convenience of description. One of these cams is adapted to operate the contact 208 and the other cam is adapted to operate the contact 209. Immediately upon the operation of the magnet 205 and corresponding displacement of the cams 207, the cams are both under the influence of a pawl operated by the varying machine, and will be rotated in a counterclockwise direction. The pawl mechanism has not been shown in order to keep the drawing as simple as possible. It is mounted on the varying machine and the pawl is constantly operated by a cam arrangement, as long as the machine is in operation.

The cam adapted to actuate the contact 209 will need a certain time to rotate into its operating position. It will of course be understood that the time for operating this contact depends on the size and shape of the cam and on the speed of the pawl mechanism, and that this time can be lengthened or shortened according to the requirements. For the purpose of description it is sufficient to know that the contact 209 will be closed a certain time after the energization of the magnet 205.

The closure of cam contact 209 causes an impulse to be transmitted to the rotary magnet 202 of the switch 200. At the same time, certain relay actions will cause the disconnection of the magnet 205 and consequently, the opening of contact 209. The magnet 205 is then energized again and causes the delayed rotation of cam 207 toward contact 209. When contact 209 closes for the second time, the above operations are repeated. Thus, the switch 200 is operated and advances its wipers 203 and 204 over the bank contacts. After a while, the wiper 203 will reach a contact to which is connected the conductor 257'. When this occurs, the relay 257 will operate and close an alarm circuit to advise the attendant that the connector is busy.

The connector busy lamp 17, in Fig. 1 was lighted immediately over conductor 19 to ground at armature 221 of relay 220.

It was assumed that the connector was to be subjected to a time test, i. e., that it was to be tested and re-tested continually. In such a case, the attendant has most likely a definite purpose in mind, and he will watch the equipment. The busy lamp will inform him of the conditions encountered by the test equipment. An audible signal is therefore unnecessary. However, if a busy connector is encountered during the time the equipment is set to test the connectors in consecutive order, the busy lamp 17 will be lighted, and, in addition, an audible signal will be operated after a certain time, to summon the attendant.

If the connector becomes idle within the allowed time interval, the functional tests will be applied and the signal operating equipment will be disconnected.

The operations intimated above will now be explained in detail.

When contact 209 is operated, a circuit will be closed for the operation of relay 260 from battery, winding of relay 260, closed armature 225 of relay 224, cam contact 209, to ground connected by closed armature 221 of relay 220. Relay 260 operates its armature 261 thereby disconnecting the magnet 205 and the relay 224 from the circuit. However, a circuit for the rotary magnet 202 is closed in parallel to the circuit of relay 260, which extends from battery, winding 202 of the rotary magnet, cam contact 209, contact and armature 221 of relay 220 to ground. The rotary magnet operates and steps the wipers 203 and 204 onto the first bank contacts. It will be seen, that the relay 257 may be connected to a contact accessible to the wiper 203 of the switch 200. The wiper 203, in advancing, will therefore complete a circuit over the conductor 257' for relay 257. The time in which the relay 257 is operated depends on the connection of conductor 257' to one of the contacts of the bank accessible to wiper 203.

Returning to the operation of relay 260 and of the rotary magnet 202, it will be remembered that the circuit for the relay 224 and the circuit for the magnet 205 were opened. Accordingly, magnet 205 releases its armature 206, thereby returning the cam contact 209 to normal position as shown in the drawing. Upon the release of relay 224, the circuit for relay 260 is opened at the armature 225 and relay 260 releases, closing the contacts controlled by armature 261. The rotary magnet 202 is thereby disconnected and a circuit is again closed for the operation of the magnet 205 and the relay 224 over the original energizing path. After a certain time the cam contact 209 will close again connecting the rotary magnet to advance the switch wipers a further step, and closing a circuit for relay 260. The relay 260 again disconnects the magnet 205 and opens the circuit of relay 224, and the latter releases the circuit for the rotary magnet and for the relay 260. Thus by the interaction of the relays 224 and 260 on the one hand and of the magnet 205 operating the cam contact 209 on the other hand, the rotary switch 200 is operated to advance its wipers over the bank contacts.

When wiper 203 reaches the contact to which the conductor 257' is connected, relay 257 will be energized in an obvious circuit. This relay closes its armature 258 connecting the conductor 14, which, it will be remembered, is grounded from the key 41, with relay 220. At the present time, this connection is of no consequence other than to connect a parallel ground to hold the relay 220 energized. At its armature 259 the relay 257

disconnects the magnet 205 and the relay 224. At the make contact of armature 259 a circuit is closed for an alarm signal provided to indicate to the attendant that the switch is busy. The circuit for the alarm signal is, as has been mentioned, effective only during the consecutive test, and is closed as follows: ground on conductor 29 (this conductor is grounded from the key 41, Fig. 1) closed contact and armature 223, armature 259 and its make contact, conductor 12, and to the alarm signal 37 in Fig. 1. Since relay 220 is held energized, ground is connected to conductor 19 leading to Fig. 1 and terminating there is the busy lamp 17. This lamp is therefore lighted and denotes that the switch is busy.

Nothing will happen as long as the key 41 is depressed. Relay 257 will stay operated to ground over wiper 203 of the switch 200 preventing further operation of the magnet 205 and of the relay 224, while the relays 226 and 220 are operated from ground on conductors 14 and 29. Should the attendant release the key 41, ground will be disconnected from these conductors and relays 220 and 226 will deenergize. The release of relay 226 opens the locking circuit of relay 220, and the release of relay 220 opens the circuit for the connector busy lamp 17 by removing ground from the conductor 19. At the same time, a circuit is closed for the operation of the release magnet of switch 200 from ground, armature 221 of relay 220, wiper 204, release magnet 201, to battery.

If it is assumed that a busy switch is encountered while the test equipment is connected to test the connector switches in consecutive order, the key 41 and the key 43 will be depressed. When a busy connector is encountered under these conditions, the procedure of the operation will be precisely the same, and when relay 257 energizes, the alarm signal 37 will be operated. In a consecutive test the equipment is not under constant supervision of the attendant but operates entirely automatically, testing one connector after the other. Under these conditions an alarm signal advising the attendant that a connector is busy and that the test equipment camps on this busy connector is of course necessary. If the attendant desires he may release the test equipment by simply operating the key 44, or he may investigate whether the connector which was signalled busy, is faulty, or actually engaged in conversation.

We shall return now to the operation of the switch 200 while the test equipment camps on the busy connector. However, it will be assumed that the switch 200 has not been advanced far enough to operate the relay 257, when the connector becomes idle.

Referring to Fig. 5, when this connector is released the relay 410 will return to normal and will remove ground from the release conductor 3. Accordingly, relay 15 shown in Fig. 1 releases. The key 41 being depressed, ground will now be connected over armature 18 of relay 15 to conductor 33. Following this conductor to Fig. 2, it will be seen that it connects with conductor 13 over an armature 129 and its resting contact. Conductor 13 has been shown heavy in order to easily distinguish the same from the rest of the circuit. This conductor 13 may be termed a common holding conductor. It provides ground for a great many circuits, as long as relays 15 and 126 are in resting position and one of the keys 41 or 42 is depressed.

Relay 20 shown in Fig. 1 will now operate from battery, winding of relay 20, resting contact and armature 17, resting contact and armature 11, to ground on holding conductor 13. Upon operating, relay 20 closes its armatures 24 and 25 switching the line conductors 8 and 9 through to the line conductors 1 and 2 terminating in the connector, Fig. 5. At its armature 22, the relay 20 disconnects the release trunk 3 of the connector from the winding of relay 15 and connects the release trunk to the conductor 34 terminating in Fig. 2 in a normally open contact 121 of relay 116 and in the winding of a relay 122. At its armature 23, the relay 20 connects itself in a locking circuit to the holding conductor 13.

Upon the release of relay 15, ground was disconnected from the conductor 29, thereby deenergizing the relay 226 in Fig. 3. The release of this relay is followed by the release of relay 220, and, when the latter relay deenergizes, it opens the circuit for relay 224 at its armature 222. The relays 226, 220, and 224 therefore deenergize in succession. Remembering that the holding conductor 13 is connected to ground at this time, it will be seen that a circuit is closed for the energization of magnet 205 from ground, holding conductor 13, normally closed contact controlled by armature 255 of relay 253, closed contact and armature 223, armature 259 and its resting contact, normally closed contact controlled by armature 261, conductor 13″, winding of magnet 205, to battery. The operation of coil 205 has at the present time only the result of moving the cams 207 into operative relation with the cam contacts 208 and 209. The cams 207 will be rotated in a counter clockwise direction and will at the expiration of a certain time interval operate one of the contacts as will be described presently. For the present time, it is sufficient to remember that the coil 205 remains operated while the test equipment is in operation. During the time the test equipment was camping on the busy connector, the rotary time switch 200 was advanced to a certain position. When the connector switch became idle, relay 15 deenergized removing ground from the conductor 29 and causing the release of

the relays 226, 220, and 224. When relay 220 edeenergized, it closed a circuit over its armature 221 and its resting contact for the operation of the release magnet 201 of the switch 200, in order to return the switch to normal position.

Relay 20 energized upon the release of the relay 15 when the connector became idle. At its armature 21, relay 20 closes an obvious circuit for relay 5, and the latter relay, upon operating closes a circuit for relay 10. Relay 5 prepares at its armature 7 a circuit for the motor magnet 36 of the secondary distributor. This circuit is, at the present time ineffective. Its utility will be discussed later. Relay 10 at its armature 11, opens the original energizing circuit of relay 20.

The line conductors 1 and 2 of the connector Fig. 5, are now connected to the test equipment as follows: upper winding of the line relay 405, normally closed contact controlled by armature 402, line conductor 1, to Fig. 1, wiper 52 of the secondary distributor, wiper 47 of the primary distributor, armature 25 and its make contact, conductor 8 to Fig. 2, upper winding of relay 109, normally closed contact controlled by armature 101, conductor 218 to Fig. 3, break contact and armature 239 of relay 238, conductor 219 to Fig. 2, normally closed contact controlled by armature 102, armature 107 and its resting contact, conductor 9 to Fig. 1, make contact and armature 24, wiper 48 of the primary distributor, wiper 53 of the secondary distributor, conductor 2 to Fig. 5, normally closed contact controlled by armature 403, lower winding of the line relay 405 to ground. There is therefore a loop circuit provided which includes both windings of the line relay 405 of the connector and the upper winding of the relay 109 of the test equipment.

The first test to be applied to the connector is for "open loop". This means in the phraseology of the art an interruption of the loop circuit over which the line relay normally operates. If the loop circuit is present the line relay 405 will operate in series with the upper winding of relay 109. The latter relay, of course, energized also.

If the loop circuit is open, neither the relay 405 nor the relay 109 will operate. At armature 110, the relay 109, will keep a circuit prepared for the signal lamp 1 over conductor 262 to Fig. 3 and from there over the resting contact and armature 231 to armature 254 of relay 253.

The test equipment is set to apply the series of functional tests to the connector. It is obvious that these tests can not be executed satisfactorily on account of relay 405 of the connector not being operated. The magnet 205 shown in Fig. 3, as will be remembered, is connected to ground on the holding conductor. After a certain time, the cam contact 208 will be operated, providing a circuit for the relay 253 from battery, winding 253, conductor 253', cam contact 208, resting contact and armature 221 to ground. Upon operating, the relay 253 closes its armature 255, locking itself to the holding conductor 13, and completing at armature 254 a circuit over conductor 262 to Fig. 2 to light the fault lamp No. 1. At armature 256 a circuit is provided extending over conductor 12 to Fig. 1 to operate an alarm.

Again, as in the former case, the alarm is only of utility in case of a continuous test. Since it was assumed, however, that only one switch is to be tested repeatedly, it will readily be seen that an audible signal is unnecessary because the attendant will be present and will be advised of the fault by the lighting of lamp No. 1.

If the loop circuit is present, the line relay 405 of the connector, and the relay 109 which is in series with the line relay, will energize. Relay 109 locks itself to the holding conductor 13 over its armature 112. At armature 111 the upper winding of relay 109 is short circuited to provide a dialing circuit for the connector which includes only the series test resistance 216 in Fig. 3.

At its armature 110 the relay 109 disconnects the fault lamp No. 1 and extends the signalling circuit to fault lamp 2 by way of armature 123 of relay 122.

Referring now to the connector Fig. 5, it will be remembered that the line relay 405 was operated over the loop circuit. It closed its armature 406. Relay 410 which is connected to ground, and short circuited over the normally closed contact controlled by armature 406, operates now in series with the relay 415 and the vertical magnet 445. The circuit may be traced from ground, winding 410, make contact and armature 406, closed off normal contact 460, relay 415, winding of the vertical magnet 445 to battery. The relay 415 and the vertical magnet 445 do not operate in this circuit on account of the high resistance of the release relay 410. Upon operating, relay 410, at its armature 413, disconnects the release magnet 462, and prepares certain operating circuits at the make contact of this armature. At its armature 411 the relay 410 connects ground to the release trunk 3 in order to busy the switch.

The test equipment will now test for the satisfactory connection of busy ground to the release trunk. It will be seen that the release trunk conductor 3 of the connector extends back through Fig. 1 to conductor 34, terminating in Fig. 2 in the relay 122. Relay 122 will operate if the connector has connected guarding ground to the release trunk 3. Relay 122 switches its armature 123, disconnecting thereby the fault lamp No. 2 and extending the signal circuit to the fault lamp No. 3 over an armature 103 of relay 100.

It is obvious that the relay 122 can not

operate if no ground is present on the release trunk leading to the connector. The coil 205 of the test equipment being energized, the cam contact 208 will be closed after an interval to energize the relay 253, and a circuit will be completed for lighting the signal lamp No. 2.

Assuming that the connector, so far, is in proper working condition, relay 122 will operate as explained and switch the signalling circuit to lamp 3. Relay 122 closes also its armature 125 thereby completing a circuit for the relay 113 from ground, armature 125 and its make contact, winding 113, conductor 113′ to Fig. 4, armature 326 and its resting contact, to battery. Relay 113 operates and closes its armature 114 thereby connecting ground to the conductor 211′ which may be traced to the cam contact 211 in Fig. 3. This contact is operated by the trip cam 210. It has been remarked previously that the purpose of the trip cam is to determine when impulses generated by the varying machine are to be effective. This is the case now, the connector being ready to receive the impulses. The trip cam 210 will close the contact 211 and thereby complete a circuit for the operation of relay 241 as follows: battery, winding 241, break contact and armature 240, armature 248 and its break contact, conductor 241′, cam contact 211, conductor 211′, to Fig. 2, conductor 211′, armature 127 and its break contact, armature 114 and its make contact, to ground. The relay 241 operates therefore, closing its armature 242 and preparing thereby a circuit for the relay 238 in series with its own winding and over armatures 247 and 252 to the grounded holding conductor 13. The circuit for relay 238 will be effective when the trip cam opens contact 211, allowing relay 238 to energize. Prior to this point, the relay is short-circuited.

Upon the operation of relay 238, the loop circuit is opened at armature 239 and is extended over the series resistance 216 to the cam contact 215. This contact is controlled by the impulse cam 214 which, as has been explained, revolves constantly, closing the contact 215 fourteen times per second. The loop circuit to the connector will therefore be interrupted in rapid succession and will operate the line relay accordingly. Two series of impulses will be transmitted in this manner, over the loop circuit which includes the series resistance 216. Each series of impulses consists of nine short interruptions in order to operate the connector into engagement with terminals of number 99. The impulse short circuiting cam designated 212, which is operated by the varying machine, closes its contact 213 upon the termination of the first series of impulses and opens this contact again in order to permit the second series of impulses to be transmitted.

Referring to Fig. 5, the connector will be operated 9 steps vertically and 9 steps rotary, and advance its wipers 451, 453 and 455 onto the terminals 452, 454, and 456. These terminals correspond to number 99. A detailed account of the vertical and rotary operations of the connector is deemed unnecessary since reference was made to an application in which this connector is disclosed and described in detail.

It will be seen that the terminals 452, 454, and 456 are wired to Fig. 1, terminating there over conductors 1′, 2′ and 3′ in armatures of relay 38. From there these conductors extend normally to a telephone set which may be located in the wire chief's office. When the connector, Fig. 5, was seized by the test equipment, or rather to say, when the start key 41′ was operated, a circuit was closed for the operation of the group relay 38. This circuit is an obvious one and includes the wipers 51 and 55, of the primary and of the secondary distributors. Upon operating, the group relay 38 closes an armature to connect its lower winding in a locking circuit extending to ground on key 41, and including normally closed armatures of other group relays.

The group lamp No. 1 which is shown to the left of the group relay 38 is thereby connected in a circuit parallel to the holding winding of the group relay and will light to indicate that a test is being executed in group No. 1. The uppermost armature of relay 38 closes to light the switch lamp No. 1 in order to indicate what switch is being tested in this group.

The group relay 38 being in operated position, it will be seen that the line conductors 1′, 2′ and 3′ are disconnected from the telephone set number 99 but instead connected to the test equipment. The private conductor 3′ terminates in relay 100, shown in Fig. 2, by way of a normally closed contact 230 of relay 228 shown in Fig. 3. The line conductors 1′ and 2′ terminate in the test equipment as follows: conductor 1′, normally closed contact controlled by armature 323 in Fig. 4, closed contact and armature 308, winding of ring test relay 329, condenser, 329′, normally closed contact controlled by armature 322, armature 328 and its break contact, and back to the connector over the conductor 2′. The ring test relay 329 in series with the condenser is therefore bridged across the line conductors 1′ and 2′.

Returning now to the operation of the connector, when the wipers of this switch engage the terminals 452, 454, and 456, the switching relay 435 energizes, closing its armature 438. This armature connects ground to the private conductor 3′. Under ordinary conditions, when the connector is used for connecting with a subscriber's line, this ground circuit serves for holding the line relay energized.

The next test applied to the connector is for the purpose of checking whether the connector was properly operated into engagement with the terminals of number 99, and whether ground was connected to the private conductor. This is done in the following manner: A circuit will be closed for the operation of the relay 100 shown in Fig. 2, if the private conductor 3′ was properly grounded. Relay 100 energizes and disconnects at its armature 103 the circuit for the fault signal lamp No. 3, at the same time extending this circuit to fault signal lamp No. 4.

In case the connector did not properly respond to the digits transmitted by the test equipment, or in case ground was not connected to the terminal 454 of the private conductor 3′, there will be no circuit for the energization of relay 100. Accordingly, the lamp 3 will remain connected to the prepared signalling circuit. Upon closure of the cam contact 208, and consequent operation of relay 253, the signal lamp 3 will light to inform the attendant that the connector had defaulted on this particular test. However, if the connector has responded properly, relay 100 energizes as described. At its armatures 101 and 102 the relay 100 disconnects the line conductors from the impulse equipment shown in Fig. 3, and extends them to other test equipment. The line circuit includes now the lower winding of relay 147.

It will be seen that the relay 147 has two windings. One of these windings is connected to battery and to the grounded holding conductor 13. The relay 147 is an electropolarized relay and does not operate its armatures when its upper winding alone is connected to a circuit. However, when the lower winding of relay 147 is also connected to a circuit, providing the current flowing in this circuit is in the proper direction, the relay 147 will energize. The lower winding of relay 147 is, as has been explained, included in the line circuit of the connector, and, if all connections are in correct working order, the current flow through the lower winding of relay 147 will be in the right direction and will cause the energization of this relay in series with the winding of line relay 405 of the connector. This constitutes a test to ascertain whether the line conductors are wired correctly or whether they are reversed. If the line conductors are reversed, the current flow in the lower winding of relay 147 is in a direction to keep the armatures of this relay at normal. If the line conductors are properly connected this relay operates and closes a circuit for the operation of relay 141. The latter relay disconnects the fault signal lamp No. 4, and extends the signaling circuit to fault lamp 5.

At its armatures 143 and 146 the relay 141 prepares a circuit for the amplifier shown at 130. This circuit will be effective at a later stage of the test and shall be explained presently. At its armature 144, the relay 141 extends ground from the make contact of armature 149 to the conductor 211′, which branches at the left to the test equipment shown in Fig. 3, and at the right to the equipment shown in Fig. 4. Following this conductor 211′ to Fig. 4, it will be seen that a circuit is closed for the operaton of the relay 300. The latter relay operates and at its armature 301 disconnects the relay 320, at the same time linking the conductor 211′ to the conductor 147′. At its armature 302 the relay 300 opens a point in a circuit which shall be described later.

The next step in the sequence of operations of the connector consists in applying ringing current to a called line. The test equipment will therefore test now whether the connector applies ringing current properly.

It will be remembered that the line conductors 1′ and 2′ are at the present time connected to a circuit which includes the ring test relay 329 shown in Fig. 4. When the connector applies ringing current, this relay will operate as follows: Fig. 5, ringing current source 464, armature of the ringing interrupter relay 465, normal contact and armature 424 of the ring-cut-off relay 420, armature 442 and its make contact, wiper 455, terminal 456, line conductor 2′, normal contact and armature 328 of relay 324, normally closed contact controlled by armature 322 of relay 320, condenser 329′, ring test relay 329, armature 308 and its break contact, normally closed contact controlled by armature 323, line conductor 1′, back to the connector, terminal 452, wiper 451, make contact and armature 436, armature 421 and its resting contact, lower winding of the ring-cut-off relay 420, to ground. The ringing relay 329 in the test equipment energizes over this circuit in response to the first ring sent out by the connector. It closes its armature 330 and thereby completes a circuit for the relay 314, from battery, winding 314, resting contact and armature 311, make contact and armature 330, conductor 141′, make contact and armature 149 of relay 147, to ground. Relay 314 energizes in this circuit. At its armature 315 relay 314 opens the prepared circuit for the signal lamp No. 5 and extends the signalling circuit over armatures 306 and 321 to the signal lamp No. 6. Relay 300, it will be remembered, is in operated position at this time. At its armature 316, the relay 314 prepares a circuit for relay 309 in series with its own winding, to ground on conductor 211′. However, relay 309 can not operate at the present moment on account of being short circuited.

If the connector does not apply ringing current, relay 329 will not operate and the relay 314 will therefore remain normal. After the expiration of a certain time a circuit will be closed for the fault signal lamp No. 5 indi-

cating to the attendant that the connector failed to apply ringing current.

The ring test relay 329 deenergizes at the end of the ringing period, removing the short circuit from relay 309 and allowing this relay to operate. At its armature 310 relay 309 opens the link circuit extending to conductor 147′, interrupting thereby the circuit of relay 300, and connecting ground from conductor 211′ to the upper winding of the polarized relay 317. The latter relay does not operate in response to the energization of its upper winding alone, but can only energize if its lower winding is connected to current in the proper direction. At its armature 311, relay 309 disconnects the original energizing circuit for relay 314 but the latter relay holds itself in a locking circuit in series with relay 309 to the grounded conductor 211′. At its armatures 312 and 313, the relay 309 connects the resistances 331 and 332 in certain relation to the incoming line conductors 1′ and 2′.

The circuit for relay 300 is interrupted. However, this relay is slow-acting and holds its armatures in operated position for a certain time. Armature 302 of relay 300 therefore keeps the circuit extending over armature 312 to the middle point of the resistances 331 and 332 open. Relay 309, being in operated position, keeps the armatures 312 and 313 closed. The two resistances 331 and 332 are therefore connected in series and bridged across the line conductors 1′ and 2′ in parallel to the ringing relay 329.

The test equipment executes a test now for premature ring cut-off. This means a fault caused by poor adjustment of the ring cut-off relay in the connector or by other conditions, which permit the ring cut-off relay 420 of the connector, to energize prematurely before the subscriber has actually replied.

The ring cut-off relay 420, of the connector is now connected in series with the two resistances 331 and 332. If the ring-cut-off relay is properly adjusted, it cannot operate over these resistances. However, if the adjustment is faulty, or, if other conditions exist in the connector to cause a premature ring-cut-off, the relay 420 will energize. If this happens, the ring cut-off relay 420 disconnects the ringing generator, connecting the back-bridge relay 400 with battery and ground to the line conductor 1′ and 2′. Upon operating, the back-bridge relay 400 reverses the line conductors 1 and 2 terminating in battery and ground in the line relay 405 respectively. Relay 147 which, as has been stated, is a polarized relay, has its lower winding connected in the circuit of the line relay of the connector, and was energized in this circuit. When the back-bridge relay operates now, it reverses the line conductors and thereby the current flow in the lower winding of relay 147. This relay deenergizes, and connects, at its armature 149 ground to the conductor 147′ by way of the make contact and armature 145 of relay 141.

The circuit of relay 300 was previously interrupted. However, this relay is slow acting and its armatures remain closed for a time. If conductor 147′ is grounded before relay 300 has retracted its armatures, there will be a circuit present, over armature 301, for holding relay 300 energized.

With the relays 314 and 300 in operated position, the signalling circuit is closed for the fault lamp 6. The fault lamp 6 will be lighted after a while to inform the attendant that the connector has prematurely disconnected ringing current.

Assuming, however, that the connector has functioned properly, relay 300 will deenergize and disconnect lamp 6 at its armature 321. At armature 301, a circuit is prepared for relay 320, and at armature 302, the resistance 331 is short circuited, leaving resistance 332 alone in series with the ring-cut-off relay 420. The latter relay should now operate and cut-off the generator. The operations which take place in this case will be explained subsequently. It shall first be assumed that the ring cut-off relay 420 fails to operate in series with resistance 332.

The connector transmits another ringing impulse to the test equipment. The ring test relay 329 energizes again, and closes its armature 330. Since conductor 141′ is connected to ground at the make contact and armature 149 of relay 147, and since relay 300 is operated in series with relay 314, it will be obvious that a circuit is completed upon the energization of the ring-test relay 329, for the operation of relay 303, by way of armatures 311 and 330. Relay 303 prepares, at its armature 304, a circuit for relay 305. This latter relay, it will be seen, is connected to the grounded conductor 211′. As long as the ring-test relay 329 is operated, relay 305 cannot energize on account of being short circuited to ground over armatures 304, 311, 330, conductor 141′, to ground at make contact and armature 149 of relay 147.

Upon the termination of the ringing impulse, relay 329 deenergizes and removes the short-circuit from relay 305. This relay operates now. At its armature 308, relay 305 opens the ringing circuit; at armature 307, the relay 320 is disconnected; and at armature 306 the fault lamp 7 is connected to the signalling circuit. Thus, the further application of ringing current is prevented, the test equipment is locked in the achieved stage, and the fault lamp 7 will be lighted to advise the attendant that the connector failed to disconnect ringing current.

Assuming, however, that the connector functions properly, the ring cut-off relay 420

will energize in series with the resistance 332. This happens upon the release of relay 300, which short-circuits the resistance 331, and before a second ringing impulse is transmitted to the test equipment. The relays 300, 303 and 305 are, therefore, at rest, while the relays 309 and 314 are energized. The relay 147 is, at this moment, also energized, its circuit over the lower winding including the windings of the line relay 405 of the connector. It will be seen that the fault lamp 8 is now, connected to the signalling circuit, over armature 151 of relay 147, conductor 264, and the armatures 321, 306 and 315.

When the ring cut-off relay 420 energizes at this instant, it connects the back-bridge relay 400 across the called line, and this relay energizes now and reverses the current flow over conductors 1 and 2. If the current reversal takes place in the proper manner, the relay 147 will deenergize and switch the signalling circuit from fault lamp 8 to fault lamp 9. However, if the current reversal is not executed properly, relay 147 remains operated, and the fault lamp 8 will be lighted to signal the trouble.

If no fault exists as far as the reversal of current is concerned, relay 147 will deenergize, and switch the signalling circuit to fault lamp 9, as explained. Relay 141 remains operated over a circuit including its armature 144, to ground on conductor 211′. Relay 147, upon deenergizing, connects ground to conductor 147′ at its armature 149 by way of make contact and armature 145 of relay 141. Relay 320, in Fig. 4, energizes now over an obvious circuit including the armatures 307 and 301, and conductor 147′. At its armatures 322 and 323 the relay 320 disconnects the ring test equipment, at the same time connecting the lower winding of relay 317 across the line conductors 1′ and 2′. The relay 317 is, as has been stated, an electro-polarized relay, and its upper winding is connected to a circuit extending over an armature 310 of relay 309 to ground on conductor 211′. This relay is adjusted to operate when its lower winding is connected to a circuit in series with the winding of the back bridge relay 400 of the connector, Fig. 5. However, the operation of relay 317 is only possible if the current flow in the circuit is in the proper direction.

The test equipment checks now whether or not the wipers 451 and 455 are connected up properly, that is to say, whether these wipers are reversed. If these wipers are reversed, the current flow in the lower winding of relay 317 will prevent an operation of this relay. It will readily be seen that the armature 318 controlling the circuit of the fault signal lamp No. 9 will then remain in resting position and the signal lamp 9 will be lighted in the usual manner to advise the attendant of the fault.

If it is assumed, however, that the wipers in the connector are connected up properly with respect to the windings of the back bridge relay 400, the current flow in the lower winding of relay 317 will cause the operation of this relay. At its armature 318, relay 317 disconnects the prepared circuit for the fault signal lamp No. 9, at the same time switching the signalling circuit over conductor 266 and over an armature 140 of the relay 136, to the fault signal lamp No. 10. At its armature 319, the relay 317 completes a circuit for a tone machine 333, over a transformer winding 334. At its armatures 317′ and 317″, the relay 317 connects the secondary winding 335 of the transformer to the incoming line conductors 1′ and 2′.

The next test applied by the equipment is for the existence of the circuit provided for the transmission of voice currents. The tone machine 333 shown in Fig. 4 and the transformer with its windings 334 and 335 are provided for this purpose.

A tone is now transmitted by means of the secondary winding 335 of the tone transformer and over the line conductors 1′ and 2′ to the talking conductors of the connector and through the condensers back to the test equipment over conductors 1 and 2. Following these conductors to Fig. 2 it will be seen that they terminate there in conductors designated 8 and 9. Conductor 8 may be traced now over the short circuit of the upper winding of relay 109, make contact and armature 101 of relay 100, armature 150 and its resting contact, armature 146 and its make contact, secondary winding of the transformer 133, armature 143 and its make contact, resting contact and armature 148, armature 102 and its make contact, armature 107 and its resting contact, and thence over conductor 9, through Fig. 1, and from there as conductor 2 to the connector. The current induced thus into the secondary winding of the transformer 133 is now amplified through two stages of the amplifier designated 130 until the composite relay 131 is reached. If the current induced by the tone machine 333 is transmitted correctly through the connector, in other words, if the circuit provided for the transmission of voice currents is in proper working order, the composite relay 131 will operate and open its armature 132. Relay 134 which is in energized position as long as the composite relay 131 is at rest, deenergizes now, closing its armature 135 and completing thereby a circuit for the relay 136. The latter relay in operating, disconnects at armature 140 the prepared circuit for the fault signal lamp No. 10, at the same time extending this signalling circuit over armature 118 of relay 116 to the fault signal lamp 11. At armature 138 the relay 136 connects itself in a locking circuit to ground at armature 114 of relay 113. If a fault exists in the voice

current transmission circuit, relay 131 will not operate. Accordingly, relay 134 remains in operated position and relay 136 cannot energize. The circuit for the fault signal No. 10 will remain closed and this signal will be lighted in the usual manner. It may be mentioned at this point. that the resting contact of armature 132 of the composite relay 131 is normally disconnected from ground at key 41′ shown in Fig. 1. When the test is started, this key is operated and provides ground for the operation of relay 134 over armature 132 of the composite relay.

It will be assumed that the voice current transmission circuit is in proper working condition. Accordingly, the relay 136 will energize and lock itself over its armature 138; at armature 140 the fault signal circuit is extended to the fault signal No. 11, and at armature 137 a circuit is closed for the operation of relay 106. At armature 139, the relay 136 opens a point in the signalling circuit for lamp 14. This, however, is of no consequence at the present stage of the operation.

Referring to the connector, Fig. 5, this switch is of the type which releases when the last party replaces the receiver. The operation is explained in detail in the application referred to. However, for the sake of convenience, the functions of the connector will be explained at this place as far as they pertain to the operations in connection with the test equipment.

It shall be assumed that the called subscriber does not replace his receiver immediately upon the termination of the conversation, but leaves his receiver off the hook for a time, while the calling party has restored the receiver.

The following conditions exist in the connector while the subscribers are talking: The busy relay 425 is disconnected over an armature 439 of the switching relay 435. The switching relay 435, and the ring-cut-off relay 420 are connected in a locking circuit including their armatures 440 and 423 and armatures 412 and 401. Armature 438 of the switching relay 435 has connected ground to the private wiper 453. The incoming release trunk designated 3 is connected to ground over armature 411 of the release relay 410.

If it is assumed now that the calling party replaces the receiver first and that the called party holds up the connection, the following takes place: The line relay 405 deenergizes, transmitting an impulse to the vertical magnet and to the relay 430. Relay 410 will be short circuited and releases. In spite of the fact that the line relay 405 and the release relay 410 deenergize due to the calling party having replaced the receiver, the switching relay 435 will remain locked up over its own armature 440 to ground provided by armature 401 of the back-bridge relay 400. The latter relay is kept energized over the called line loop. Ground will therefore remain connected to the private wiper 453 over the armature 438 of the switching relay. However, ground is disconnected from the incoming release trunk 3 by the armature 411 of the relay 410. Tracing the release trunk conductor 3 in its various connections in the connector it will be seen that, while the relay 430 is in energized position no potential is present on the release trunk conductor leading back to the preceding switches. Relay 430 received an impulse upon the deenergization of relay 405. All preceding switches release. therefore, while the connector is kept in operated position as long as the called subscriber keeps his receiver off the hook. It is very essential that ground is reconnected to the release trunk conductor 3 immediately after the release of the preceding switches in order to guard the connector against seizure while the called subscriber is still on the line. This is achieved by the release of the relay 430. It will be seen, that ground is connected to the release trunk 3 when this relay deenergizes again after it has received an impulse in parallel with the vertical magnet 445. The guarding ground may be traced from closed armature 438 of the switching relay 435, armature 431 and its resting contact, make contact and armature 422 of the ring cut-off relay, resting contact and armature 426, release trunk 3. The connector cannot be seized as long as the release trunk remains grounded. The release of the connector, and accordingly the removal of the ground from the release trunk, takes place when the called party finally replaces the receiver. The back-bridge relay 400 deenergizes at that time, opening the locking circuit for the ring-cut-off relay 420 and for the switching relay 435.

Relay 106 of the test equipment, upon operating, opens its armature 107 interrupting thereby the loop circuit extending to the connector. This action is equivalent to the calling subscriber replacing his receiver and opening thereby the circuit for the line relay 405. The called subscriber's line loop is represented by the transformer winding 335 shown in Fig. 4, which winding is still connected across the line conductors 1′ and 2′. The condition that the calling subscriber replaces his receiver before the called subscriber has hung up is therefore imitated by the test equipment and the release functions of the connector provided for this condition take place now as described above.

As far as the test equipment is concerned, this will manifest itself by a short opening of the release conductor 3. Tracing the release conductor 3 through Fig. 1 to Fig. 2, it will be seen that this conductor terminates in the winding of relay 122. When ground is disconnected from the release trunk 3, relay 122 will deenergize and switch its armature 125

into alternate position as shown in the drawings. As long as relay 122 was energized a circuit was closed for the relay 113 from ground on armature 125, winding 113, conductor 113′, armature 326 and its resting contact to battery. Relay 113 deenergizes therefore. However relay 113 is slow acting and maintains its armatures closed for a time. With relay 122 deenergized, a circuit is closed for the operation of relay 116 over armature 115 of relay 113 and armature 115 of relay 113 and armature 125 of relay 122. Relay 116 energizes and locks itself at armature 119 to ground on holding conductor 13. The deenergization of relay 113 causes ground to be disconnected from the holding circuit of relay 136 and from the conductor 211′. The consequences of this will be discussed later. The energization of relay 116 causes the interruption of the signalling circuit extending to the signal lamp 11, and at armature 117, the relay 116 extends the signalling circuit to the signal lamp 12. Had the connector failed to respond to the opening of the line loop at armature 107 of relay 106, relay 116 would not have energized, and, accordingly, the signalling circuit for the signal lamp 11 would have remained closed so that this lamp would have been lighted to signal this condition to the attendant.

When relay 113 is fully deenergized, the ground from the holding conductor 13 is extended back through the locking armature 119 of relay 116, and over the armature 115 and its resting contact, to conductor 228′ which terminates in Fig. 3 in relays 228 and 232 to battery. Therefore, when relay 113 has deenergized completely, relays 228 and 232 operate. Relay 228 moves its armature 229 into alternate position to provide a holding circuit to the holding conductor 13.

Ground has been disconnected from conductor 211′ upon the release of relay 113. Accordingly, the relays 309 and 314 in Fig. 4 will release. Likewise, relay 141 which was locked over its armature 144 to the conductor 211, and relay 136 which was locked over its armature 138, will return to normal. Upon the deenergization of relay 141 the conductor 147′ leading to Fig. 4 will be disconnected at armature 145 of relay 141 from ground on armature 149 of relay 147, causing the release of relay 320.

The connector, Fig. 5, has meanwhile performed the necessary switching operations and reconnected ground to the release trunk 3. Relay 122, in Fig. 2, energizes therefore, again closing its armature 124 and completing thereby a circuit for the relay 324 shown in Fig. 4, from battery, winding 324, conductor 100′ to Fig. 2, armature 124 and its make contact, make contact and armature 120 of the now energized relay 116, to ground at armature 105 of the relay 100. Though the circuit of relay 100 is interrupted at this moment at armature 230 of relay 228, the relay 100 keeps its armatures in operated position on account of being slow acting. Relay 113 cannot energize now, its energizing circuit being interrupted at armature 326 of relay 324. The reenergization of relay 122 consequent to the replacement of ground to the release conductor 3 in the connector causes the disconnection of the prepared circuit for the fault signal lamp No. 12. It is obvious that the circuit for this fault lamp would have been held in readiness for signalling the attendant, if the connector had failed to reconnect ground to the release trunk 3.

A circuit is now completed from ground on conductor 34, make contact and armature 121′, conductor 228′, relays 228 and 232 in series to battery. Relay 228 thereupon locks itself at armature 229 to holding conductor 13, at the same time opening the circuit of relay 245 which, therefore, deenergizes.

Returning now to the point when relay 324, shown in Fig. 4, was operated in consequence to the reoperation of relay 122, relay 324 operates its armature 327 thereby connecting itself in a holding circuit extending over conductor 106′ to ground at armature 108 of relay 106. The circuit of relay 106 was opened a short while ago by the deenergizing relay 136 which opened its armature 137. Relay 136 was held in a locking circuit over its own armature 138 to ground at armature 114 of relay 113. However, relay 136, a slow-acting relay, deenergizes slowly and keeps ground connected at its armature 137 for keeping relay 106 energized for a time. Relay 106 is also a slow-acting relay. Its deenergization is therefore delayed and the relay 324 in operating finds a locking circuit for itself, as described.

It will be remembered that ground was connected to the conductor 228′, shown in Fig. 2, upon the operation of relay 116 and deenergization of the relay 113. The relays 228 and 232 shown in Fig. 3 were operated over conductor 228′ and the relay 245 which was held energized over its own armature 246 to ground on the holding conductor by way of break contacts and armature 229 of relay 228, deenergizes now. The private conductor 3′ belonging to the number 99 may be followed from Fig. 5, through Figs. 1, 2, to Fig. 3 terminating in Fig. 3 at conductor 3′ in an armature 230 of the relay 228. While this relay is in normal position, the private conductor is connected back to Fig. 2 terminating in a winding of relay 100 to battery. This relay it will be remembered was operated immediately upon the seizure of number 99 by the connector Fig. 5. Now, since the relay 228 is in operated position, having locked itself over its own armature 229 to the holding conductor 13, the circuit for the relay 100 will be opened at armature 230 of relay 228, and relay 100 will deenergize. Upon

energizing, the relay 228 moves also its armature 231, switching the fault signalling circuit from conductor 262 to conductor 262'. When this conductor is traced to Fig. 2, it will be seen that the signalling circuit is now extended to the fault signal lamp No. 13.

The test to be executed by the equipment at this stage of the operation consists in releasing the connector, in making the number 99 busy and in reoperating the connector into engagement with the busy line. This is accomplished as follows:

The private conductor 3' is now connected to the conductor 13' over armature 230 of relay 228. Tracing this conductor 13' to Fig. 2 it will be seen that it terminates in the lower winding of relay 152, the other side of this winding connecting up with the grounded holding conductor 13.

Returning to the point when the relay 320 shown in Fig. 4 deenergized, it will be apparent that this relay in moving its armatures 322 and 323 back to normal, disconnects the lower winding of relay 317 from the line conductors 1' and 2' which belong to the number 99. Relay 324 is also energized and has opened the back-bridge loop of the connector at its armature 328. This amounts to the action on the part of a called subscriber replacing his receiver. The current path for the back-bridge relay 400 in the connector, Fig. 5, is opened, causing the back-bridge relay 400 to deenergize.

The test equipment therefore produces conditions equivalent to those present when the calling party replaces the receiver first and shortly afterwards the called party replaces the receiver.

The connector releases in the usual manner, the release circuit being closed from ground, normally closed contact controlled by armature 404 of relay 400 and the resting contact of that armature, armature 406 of the line relay, armature 413 and its resting contact, release magnet 462, off-normal springs 461, to battery.

For the understanding of the further operations of the test equipment it will be well to remember that the private conductor 3' is grounded at this time, over armature 230 of relay 228, to ground on the holding conductor 13 by way of the lower winding of relay 152. The connector will now be operated again by two series of impulses, each series comprising nine impulses, to engage the terminals of number 99. This operation will be described presently.

Relay 324, it will be remembered was operated over the conductor 100', armatures 124, 120, to ground at armature 105 of the relay 100. Upon operating, the relay 324 had locked itself over armature 327, conductor 106', to ground at armature 108 of the relay 106. Relay 106 deenergizes following the deenergization of relay 136. The locking circuit for relay 324 is thereby opened and this relay again returns to normal position. At armature 326, the relay 324 connects battery again to the conductor 113' so that relay 113 shown in Fig. 2 can operate again to ground at armature 125 of relay 122. The connector, Fig. 5, has released, but, an instant afterwards the line relay 405 of the connector operates again over the conductors 1 and 2 and over the loop in the test equipment. The loop for operating the line relay of the connector was restored to its original condition by the deenergization of the relays 100 and 106.

Upon operating, the line relay in the connector again removes the short circuit around the release relay 410 so that this relay can energize and ground the release conductor 3. This operation is without particular effect, however, since earth has been maintained on conductor 3 over armatures 125 and 121 to busy the connector and hold up relay 122. The operation of the varying machine causes the trip cam 210 to close the trip contact 211 in precisely the same manner as when the connection was first established, and a circuit is closed for the operation of relay 241 from battery, winding 241, resting contact and armature 240, armature 248 and its resting contact, conductor 241', cam contact 211, conductor 211' to Fig. 2, armature 127 of relay 126, and armature 114 of relay 113 to ground. Relay 241 prepares the circuit for relay 238 at its armature 242, connecting relay 238 in series with its own winding and by way of armatures 247, 252, to the holding conductor 13. Relay 238 cannot operate as long as trip cam contact 211 is closed, on account of being short-circuited over the trip contact. When this contact opens, it removes the short circuit, and relay 238 energizes. It opens at armature 239 the loop shunt of the line conductors. At this time the relay 232 is in operated position in series with relay 228. The series resistance 216 is therefore shorted out at armature 233 of relay 232 and the resistance 217 is connected across the impulse conductors 218 and 219.

When relay 238 operated, it switched its armature 240 to alternate position, disconnecting the original energizing circuit of relay 241 and providing an energizing circuit for relay 243. This energizing circuit is closed at the trip cam contact 211 and extends by way of the conductor 241', and the armatures 248, 240, and 237, to the winding of 243 and to battery. Relay 243, upon operating closes its armature 244 preparing a circuit for the relay 236 in series with its own winding and in parallel with the windings of relays 241 and 238. Relay 236 is short circuited by cam contact 211 and cannot operate. When the cam contact 211 opens this short circuit is removed and relay 236 energizes. This relay completes a circuit at its armature 237 for the operation of the relay 249 from

battery, relay 249, resting contact controlled by armature 251, make contact and armature 235, make contact and armature 237, make contact and armature 240, armature 248 and its resting contact, to the grounded conductor 211′, by way of the trip cam 211. Relay 249 locks itself to the grounded holding conductor 13 at its armature 251, making itself independent of the original energizing circuit. At its armature 252, the relay 249 disconnects the grounded holding conductor 13 from the circuit of the relays 236, 238, 243 and 241.

While the above relay operations took place, the varying machine operated the impulse contacts 215, controlled by cam 214, and a series of nine impulses was sent out to the connector with the resistance 217 bridged across the impulse conductors 218 and 219. The wipers of the connector were again raised by nine steps. The varying machine then connected a short circuit around the impulse contact 215 upon the termination of the impulse series, by means of the impulse short circuiting cam 212 which, at the right instant, closed the contact 213 in the usual manner. A second series of nine impulses was then sent out to the connector to advance the wipers of the connector to the desired terminals which in the present case are again terminals 452, 454, and 456. Since the private terminal 454 is grounded at the present time over conductor 3′, the busy relay 425 of the connector will operate and will connect busy tone to the talking conductors. The operation of the test equipment in checking for the presence of the busy tone will be described later. The test equipment ascertains next whether the operation of the connector was properly carried out in response to the impulses transmitted over the line with the resistance 217 shunting the line conductors, and whether the connector had properly engaged the busy line.

Referring to the connector, Fig. 5, it will be seen that the busy relay 425 is connected to the private wiper 453 during the rotation of the connector in order to test whether or not the called line is busy or idle. If the line is busy the busy relay 425 will be operated over the following circuit: battery, winding 425, break contact and armature 439, make contact and armature 431, wiper 453 to ground on the private terminal 454. If a line is busy the private terminal will be grounded. It has been explained previously that the test equipment busies the line number 99, by grounding the private conductor 3′ in series with the lower winding of relay 152. When the connector engages the line, the busy relay 425 will be connected to the grounded conductor 3′ and will operate in series with relay 152, shown in Fig. 2. Obviously, the purpose of this test, that is to say, of the operation of relay 152 is to check whether or not the connector has properly executed the testing operation on a busy line. Relay 152 operates and locks itself over its armature 155 at its upper winding to the holding conductor 13. At its armature 156, the relay 152 disconnects the fault lamp 13 and extends the signalling circuit over armature 139 of relay 136 to the fault lamp 14. Had there been a fault in the busy test circuit of the connector, relay 152 would have remained in normal position and the signal lamp 13 would have been lighted to inform the attendant of the fault.

The exchange busy tone is now applied at the connector from the busy equipment 463, make contact and armature 428 of relay 425, to the lower talking conductor of the connector. The test equipment performs now a test to check whether or not the connector properly applies the busy signal. Before explaining the functions of the test equipment it may be mentioned that the presence of busy tone is checked regardless whether the connector applies the busy tone to the lower or to the upper line conductor.

In the present case, the busy tone is applied to the lower talking conductor. When this conductor is traced to the test equipment, it will be seen that it terminates in Fig. 2 in conductor 9. The relays 106 and 100 being deenergized at this time, the conductor may be followed to Fig. 3, and over armature 239 back to Fig. 2, normally closed contact controlled by armature 101, to the conductor 109′. If busy tone is applied to the upper talking conductor it will be seen that this conductor leads over make contact and armature 111 and terminates now likewise in conductor 109′. Since relay 152 is in operated position and locked to the holding conductor 13, a circuit is closed for the busy signal, over conductor 109′, make contact and armature 157, secondary winding of the transformer 133 to ground at armature 143 of relay 141. The signalling current received in this winding of the transformer 133 is now amplified through two stages of the amplifier 130. After being amplified through the second stage, the composite relay 131 will be operated. This relay, upon energizing, opens its armature 132 disconnecting ground from the winding of relay 134. Upon deenergizing, relay 134 closes its armature 135, completing a circuit for the operation of relay 136. Upon operating relay 136 closes its armature 137 thereby providing a circuit for the operation of relay 106. Relay 106 closes at its armature 108 a circuit for the operation of relay 324 as follows: ground, make contact and armature 108, armature 153, armature 120 and its make contact, make contact and armature 124, conductor 100′, winding of relay 324, to battery. Relay 324 locks itself over its armature 327 and conductor 106′ to ground at armature 108, and disconnects at its armature 326, battery from conductor 113′ in order to release the

relay 113. Relay 106 at its armature 107 opens the line loop leading to the connector thereby producing a condition equivalent to the one present in the connector when the calling party replaces his receiver. Relay 136, upon energizing, opens its armature 139, thereby disconnecting the circuit for the fault lamp 14. It is obvious that the signal 14 will be lighted in case the busy signal is not transmitted properly to the test equipment.

Returning now to the operation of the connector, when relay 106 operates and opens the line loop at its armature 107, the line relay 405 of the connector will deenergize immediately followed by the deenergization of the release relay 410. Release of the connector takes place instantly over a circuit from ground, normal contact controlled by armature 406 of relay 405, armature 413 and its resting contact, winding of the release magnet 462, off-normal springs 461, to battery. The connector releases and the release circuit is opened at the off normal springs 461.

The release of the test equipment takes place as follows: when relay 324 energizes it closes its armature 325 grounding the conductor 152′ which leads to Fig. 2. Upon the operation of relay 152 in Fig. 2, which relay is energized in series with the test relay 425 of the connector in the moment the connector is set upon the busy called line, the armature 155 will be closed, connecting the ground on conductor 152′ to a relay 126. This relay energizes now, closing at its armature 128 a holding circuit for itself to ground on conductor 152′. At its armature 127, relay 126 opens the conductor 211′, and at its armature 129, the conductor 33 is disconnected from the holding conductor 13.

It will be remembered that the conductor 33 is grounded from the key 41, Fig. 1. The disconnection of conductor 33 from the holding conductor 13 causes therefore the release of all relays which have been locked up to the holding conductor. Relay 109 releases now; relay 116 releases likewise, opening the circuit for relay 113. Upon the release of relay 113, ground is disconnected at armature 114, causing the interruption of the locking circuit for relay 136. Relay 134 is in operated position again, its circuit being closed at armature 132 of the composite relay 131 of the amplifier, which relay has only been operated in response to the transmission of the busy signal as explained. The relays 228, 232 and 249 in Fig. 3 release also, since ground was disconnected from the holding conductor. The relays 236, 238, 241, and 243 have released previously upon the operation of relay 249. The magnet 205, which, it will be remembered, was energized during the entire operation of the testing equipment over a circuit extending over conductor 13″, and contacts controlled by armatures 261, 259, 223, and 255 to ground on the holding conductor, releases likewise.

Referring to Fig. 1, it will be seen that relay 20 was locked up to the holding conductor 13. Accordingly, this relay deenergizes, disconnecting itself at its armature 23 from the holding conductor 13. At its armature 21, relay 20 opens the circuit of relay 5 causing the latter relay to deenergize and to open the circuit of relay 10.

Assuming that the key 41 is still in operated position, it will be seen, that ground is still connected to the conductor 33 and to the conductor 14. The relay 15 is now again connected over a resting contact of armature 22 of relay 20 and by way of the wipers of the primary and secondary distributors to the release trunk conductor 3 of the connector. The motor magnets 35 or 36 of the primary and of the secondary distributor are disconnected from the circuit at a contact of the key 43. Another connector can therefore not be engaged by the test equipment. However, since the key 41 is assumed to be still in operated position, ground at conductor 33 will be again connected to the holding connector 13 when the relay 126 in Fig. 2 deenergizes. When this occurs, the sequence of tests which have been described will again be applied to the connector in the same manner. It will therefore be seen, that if the key 41 is depressed to the exclusion of other keys, one and the same switch will be subjected to a continuous test.

Returning to the operation of the test equipment it will be described now how a fault signal is lighted, if the test equipment discovers that the connector does not properly execute one of its operations.

Referring particularly to Fig. 3, it will be remembered that the magnet 205 operates immediately when a connector is seized and remains operated throughout the execution of the series of tests. The cams 207 are therefore brought into operative relation with the contacts 208 and 209. The cams 207 rotate step by step in the direction indicated by the arrow and the contact 208 will be closed after a certain time interval. This time interval is longer than the total time necessary for applying the entire series of functional tests. Now, if one of the tests is not carried out properly, that is to say, if the test equipment discovers that the connector does not respond properly to one of the functional tests, the operation is stopped at the point where the fault is discovered in a manner which was described previously.

The conductors 262 and 262′ in Fig. 3, are the common signalling conductors for lighting the various signal lamps 1 to 14, shown in Figs. 2 and 4. It will be seen that the conductor 262 is normally connected over the resting contact of armature 231, to an armature 254 of relay 253. The conductor 262′ is wired to the make contact of armature

231. Relay 228, it will be remembered energizes shortly before the connector is operated for a second time over a loop circuit shunted by resistance 217. Prior to this operation, the relay 228 is in normal position keeping the conductor 262 connected to the armature 254 of relay 253. The conductor 262 extends through the drawing Fig. 2 and Fig. 4 to the fault signals 1 to 12, inclusive. The conductor 262′ extends likewise through Fig. 2 and is provided for serving the operation of the fault signals 13 and 14.

If it is assumed now, that a fault is discovered at some stage of the operation of the test equipment the signal is operated as follows: first, the corresponding switching relay for switching the signalling circuit to the next fault lamp fails to operate. If for example test No. 2 proves that the connector is faulty, the relay 122 in Fig. 2 does not energize. Armature 123 remains in the position shown in the drawing. Relay 109 which at this stage of the operation is energized, has disconnected the fault signal lamp No. 1 and switched the conductor 262 to the armature 123 of relay 122. The signalling conductor 262 is therefore connected to the fault signal No. 2. After a certain time the cam contact 208 will be operated, closing a circuit from ground, armature 221 and its resting contact, cam contact 208, conductor 253′, winding of relay 253 to battery. The relay 253 operates, locking itself to the holding conductor 13 at its armature 255, at the same time disconnecting the holding conductor from the circuit of the magnet 205. The latter deenergizes. This, however, is of no consequence, due to the relay 253 being locked to the holding conductor. At its armature 254 the relay 253 closes the circuit for lighting the signal lamp 2, indicating to the attendant that the connector switch has failed to properly execute a certain operation. At its armature 256 the relay 253 applies ground to the conductor No. 12. This conductor, it will be seen, terminates in Fig. 1. The grounding of this conductor has at the present time no utility. If a connector is subjected to a continual test it is very likely that the attendant has a certain object in view and that he watches the operation of the test equipment. It is therefore sufficient to operate only the fault signaal lamp No. 2.

However, if the equipment is used for testing all connectors in a group or all connectors in the exchange there must be provisions for audibly signalling the attendant. Under these circumstances, the alarm signal 37 which may be a bell or a buzzer or any other kind of known signalling apparatus will be operated when the relay 253 in Fig. 3 applies ground to the conductor 12.

If the attendant desires to release the test equipment, he will operate the key 44. Ground from the key 41 is thereby disconnected from the conductors 14 and 33. The disconnection of ground from conductor 33 causes the release of the test equipment as was already described.

It shall be assumed now that it is desired to test all the connector switches in an exchange. For this purpose the keys 41 and 43 will be depressed together. If desired, the operations may be started with a certain connector switch. This is made possible by the provisions of the individual stepping keys 45 and 46, the first being provided for individually stepping the primary distributor and the second serving to individually step the secondary distributor. Now, when the keys 41 and 43 are operated together, the test equipment starts to function. The operation of the test equipment is substantially the same as that already described, that is to say, the series of functional tests which have been explained will now be applied to all the connectors in the exchange in sequence. The operations of the test equipment shall therefore not be repeated but instead the stepping actions of the distributor switches shall be pointed out.

It shall be assumed for this purpose that the test equipment has finished the application of the test to the connector shown in Fig. 5. It shall further be assumed that the operations on the part of the connector were satisfactory and that no fault was signalled. Relay 20 deenergizes when the test is completed, opening at its armature 21 the circuit for the relay 5. The latter is a slow-acting relay and keeps its armature 7 closed for an instant, while relay 20 is deenergized and has switched the armature 21 into the position shown in the drawing. A circuit is therefore closed for the operation of the motor magnet 36 of the secondary distributor, from ground, armature 21 and its resting contact, make contact and armature 7, contact of the key 43, wiper 50 of the primary distributor, and winding of the motor magnet 36 to battery. The wipers 52, 53, 54, and 55 of the secondary distributor are therefore moved to the bank contacts 2. The test equipment is now in engagement with connector switch No. 2 in group No. 1.

The group relay 38 which was originally energized from ground over the wiper 51 of the primary distributor and over the wiper 55 of the secondary distributor is locked over its lower winding and one of its own armatures, and by way of armatures of other group relays to ground at the key 41. When the wiper 55 of the secondary distributor leaves position 1, the circuit for the upper winding of the group relay 38 is opened. This results in extinguishing the switch lamp No. 1.

In position 2, the wiper 55 of the secondary distributor closes a circuit for the switch lamp No. 2. Wipers 52, 53, and 54 of the secondary distributor engage contacts No. 2

which are wired over conductors like conductors 1, 2, and 3 to a connector No. 2 in group No. 1. This connector of course is in every respect similar to the one shown in Fig. 5.

If connector No. 2 is busy, the same operations wil take place as have already been described previously, that is, relay 15 in Fig. 1 will be operated and will disconnect at its armature 17 the energizing circuit of relay 20. At its armature 18 the relay 15 switches ground from the key 41 to the conductor 29. No test is applied in this case and the signal lamp 17 will light after a time, indicating that the connector switch designated by the group number and switch number, is busy. The attendant will be advised of this condition by the operation of the audible signal 37 which will be operated over the conductor 12 in a manner described already. The attendant may release the test equipment by operating key 44 and continue the test with the next connector in sequence.

It is convenient, however, to have means provided in the test equipment for skipping a busy connector and for continuing the test without delay. This provision consists of a key 70 and shall be explained together with another provision which shall first be briefly described.

A connector switch frame comprises space for a certain number of connectors. Usually, when an exchange is installed, the maximum number of connectors are not required, since this number of connectors represents the ultimate capacity of a telephone exchange. A connector may also be withdrawn on account of repair-work. A connector frame is, accordingly, not always equipped to its fullest capacity. The secondary distributor must therefore have means to discriminate between used and unused connector positions. Unused positions must be skipped by the secondary distributor.

It will be seen that a resistance designated 3000 is normally connected to position 11 of the secondary distributor. This position 11 of the secondary distributor normally leads to connector switch No. 11. If it is assumed that there is no connector provided for No. 11, that is, that the group is not fully equipped and that connector No. 11 is missing, the bank contact accessible to the wiper 54 of the secondary distributor will be wired to a resistance such as 3000 and to ground. When the secondary distributor has finished testing connector No. 10, its motor magnet 36 receives an impulse and the wipers 52, 53, 54, and 55 will engage the bank contacts provided for connector No. 11. Wiper 54 encounters now ground over the resistance 3000. If wiper 54 would encounter direct ground, this condition would designate a busy connecter and relay 15 would pull up fully, starting the connection of the audible signal 37 and of the connector busy lamp 17. No signal is desired in this case but skipping. This is done as follows: relay 15 is adjusted to operate and to move only its armature 17 when energized in series with resistance 3000. The energizing circuit for relay 20 is thereby disconnected. Relay 5 will now be operated while relay 20 is prevented from operating. The circuit for relay 5 extends from battery, winding relay 5, armature and resting contact 16, make contact and armature 17, resting contact and armature 11 to the grounded holding conductor 13. Since relay 20 is in normal position, and relay 5 is energized, a circuit is closed for the operation of the stepping magnet 36 of the secondary distributor, the circuit including a contact of the consecutive test key 43 and the wiper 50 of the primary distributor. The secondary distributor takes a step and advances its wipers 52 to 55, inclusive, to the next set of bank contact, that is, to the next connector switch.

If it is desired to skip both, a missing connector and a busy connector, the key 70 will be operated. Direct ground is thereby connected to all unused connector No's by way of conductor 71, and the resistance 65 is inserted in the circuit of relay 15. In case the test equipment encounters a busy connector or a missing connector, relay 15 will operate in both cases alike, e. g., from ground by way of resistance 65 over its winding to battery. The resistance 65 prevents relay 15 from energizing fully, but the current flow through its winding will be sufficient to move armature 17. The motor magnet of the secondary distributor receives, therefore, an impulse to advance its wipers to the next connector.

It was assumed that the key 41 and the key 43 were operated for the purpose of testing all connectors in the exchange in consecutive order. The stepping of the secondary distributor from one switch to another has been described, and the operations when a busy connector was encountered or a missing connector was encountered were described also. The stepping of the primary distributor will be explained next. A primary distributor has access to 25 secondary distributors, such as the one shown. Each secondary distributor has access to twenty-five connectors, which, in the assumed example, may belong to two groups, one group comprising 12 switches, and the other group comprising 13 connector switches.

When the last switch accessible to the secondary distributor has been tested, the motor magnet 35 of the primary distributor must receive an impulse to step the primary distributor unto the next secondary distributor. It will be seen that wiper 55 of the secondary distributor, is, during operation of the equipment, connected to ground by way of the wiper 51 of the primary distributor.

When the last switch which in the example shown is the 25th switch has been tested, a circuit will be closed for the operation of relay 30, from ground, wiper 51 of the primary distributor, wiper 55 of the secondary distributor, contact 25, upper winding of relay 30 to battery. Relay 30 operates and closes its armature 31 thereby providing a circuit for the switch lamp 13 (it will be remembered that switch 13 is assumed to be the last switch in the second group in the frame). At its armature 32, the relay 30 prepares a circuit for the operation of the motor magnet 35 of the primary distributor. When the last switch is tested through by the testing equipment, relay 20 will deenergize and open the circuit of relay 5. This latter relay, being slow to release, maintains its armature 7 attracted for a moment, but long enough to momentarily close the circuit for the operation of the motor magnets 35 and 36 from ground by way of armature 21 and its resting contact of relay 20. The primary distributor steps its wipers now to engage the next secondary distributor, and the secondary distributor moves its wipers from the 25th position to the first position where the wipers engage the terminals of the first switch as shown.

It will be seen that the lower winding of relay 30 is connected to a bank contact which is accessible to the wiper 49 of the primary distributor. This provision is for the purpose of stepping the primary distributor over contacts belonging to an unused secondary distributor. The branches designated 75′ are wired similarly to unused positions of the primary distributor. Unused positions may, for example, occur if the exchange is not equipped to its ultimate capacity. Entire groups of connectors such as the connectors accessible to the secondary distributor shown in Fig. 1, may be missing. A secondary distributor may or may not be provided for the missing group. At any rate, it is desirable to skip the missing groups without any delay, that is, to advance the primary distributor immediately to the next secondary distributor which has access to connector switches. All positions of the primary distributor which belong to unused secondary distributors are, for this purpose wired to the lower winding of the relay 30, as shown in the drawing.

This provision is very similar to the one explained for advancing secondary distributors over unused switch numbers. In other words, the lower winding of relay 30 corresponds in its function to the resistance 3000. When the primary distributor encounters an unused group, the lower winding of relay 30 will be connected in series with relay 15. This relay will not operate fully under this condition, but will operate to close its armature 17 to the exclusion of other armatures. Relay 30 will energize in series with relay 15. A circuit will therefore be completed for the stepping magnet 35 of the primary distributor from ground, armature 21 and its resting contact, make contact and armature 7, contact of the consecutive test key 43, make contact and armature 32, winding of the motor magnet 35, to battery. Thus the primary distributor skips unused bank contacts and advances without delay to the next used secondary distributor.

It shall be assumed now that the last switch in the last group has been tested. Since it was the purpose to test all switches in the entire exchange in numerical order and this purpose has been achieved, the test must be stopped now. When the last switch in the last group is reached relay 25 will be operated over a circuit including its lower winding and a contact, such as 40′ of the group relay 40 of the last group, to ground. Relay 25 operates and locks itself over both windings and armature 27 to ground at the key 41. Relay 25 is a two step relay. When its lower winding is energized alone, the ampere-turns furnished by this winding are insufficient for operating all armatures. Only armature 27 will be operated to prepare a circuit for the upper winding of this relay. The upper winding is short-circuited at the present time from ground at armature 40′ of the last group relay, and ground at key 41. While the series of tests are applied to the last switch, the relay 25 remains in this position, with its armature 27 closed and all other armatures at normal as shown.

When the last switch in the last group has been tested, the distributor switches are advanced in the usual manner, and the primary distributor engages again the secondary distributor shown in the drawing, which has its wipers standing on terminals leading to the first connector switch in the first group. The group relay 40 of the last group releases upon the advance of the distributors, and opens its armature 40′, thereby removing the short-circuit from the uper winding of relay 25. The ampere-turns of the upper winding are now added to those of the lower winding furnishing sufficient power for the full operation of relay 25. At its armature 26 the relay 25 connects the signal lamp 16. The signal lamp 16 is lighted to indicate that the test is ended. At its armature 28, the relay 25 disconnects ground from the conductor 14 and from the armature 18, preventing thereby a continuation of the test. At the same time ground from the key 41 is switched to the audible signal 37. The office attendant will therefore be advised that the test has terminated. Upon restoration of the keys 41 and 43, relay 25 returns into normal position disconnecting itself from the circuit, disconnect-

ing the lamp 16 and reconnecting the key 41 to the test equipment as shown in the drawing.

It shall be assumed now that it is desired to test one group only. This consists in the application of the functional tests to all connectors in one group in sequence to the exclusion of other groups. If this test is desired, the attendant will first operate the primary distributor to the particular group in which the test is to be executed. This is done by operating the individual key 45 thereby stepping the primary distributor to the desired group. The keys 42 and 43 will now be operated together to start the test.

When the last switch in the group is reached, relay 25 will operate over the lower contact of the group key 42 and over an armature of the respective group relay to ground on the last switch contact, which may be contact 12 or contact 25 in the bank accessible to the wiper 55 of the secondary distributor. The energization of relay 25 and its functions are precisely the same as when this relay was energized from the group relay of the last group. The only difference resides in the fact that the relay is now initially energized over a contact of the group key 42, an armature of an ordinary group relay, and to ground by way of the wipers of the distributor switches when the last connector in the group is reached. Relay 25 operates, locking itself over its armature 27 to ground on a contact of the group key 42. When the last switch in the group has been tested, the distributor advances as usual and the short-circuit is thereby removed from the upper winding of relay 25. This relay operates its other armatures now and closes at armature 26 the circuit of the signal lamp 16 to indicate that the testing of the group has ended. Ground is disconnected from the conductors 14 and 33 of the test equipment and switched to the circuit of the audible signal 37 in order to call the attention of the attendant to the fact that the test in this group has terminated.

In conclusion, it may be remarked that the series of functional tests is applied to a connector switch in very rapid succession, the entire test consuming about 15 seconds per connector. It is therefore possible to subject the connector switches to an accurate test within an exceedingly short time. It will also be apparent that one of the advantages resulting from the rapid operation of the test equipment resides in the fact that a connector subjected to a test is withdrawn from service only for a very short time, while the test is executed and trouble is recorded in a reliable manner. There are, of course, numerous other advantages which will be obvious to those skilled in the art, and which will therefore not be specifically recorded in this specification.

It will also be apparent that modifications may suggest themselves readily. Accordingly, I desire it to be understood that I do not wish to be limited in the application of the invention, to the precise structure shown in the drawings, but only by the claims which follow:

What is claimed is:

1. In an automatic telephone system, subscriber's lines, terminals therefor, connector switches having direct access to said terminals, a test mechanism, a two-conductor trunk line, automatic switching means, means for operating said switching means to connect said test mechanism over said trunk line with a connector, said connector having two line conductors normally connected to battery and ground, respectively, the conductors of said trunk line being connected to the line conductors of said connector when connection is established between said test mechanism and said connector and a current flow being created over said trunk line, means in said test mechanism responsive to said current flow said means in said test mechanism effective in the absence of said current flow for holding said connection, signals, and means for operating certain of said signals to indicate that the line circuit of said connector is faulty.

2. In an automatic telephone system, connector switches for extending connections from calling lines to called lines, a test mechanism therefor, a two-conductor trunk line, automatic switching means, means for operating said switching means to connect said test mechanism over said trunk line with a connector, said connector having two line conductors normally connected to battery and ground, respectively, the conductors of said trunk line being connected to the line conductors of said connector when connection is established between said test mechanism and said connector and a current flow being created over said trunk line, means in said test mechanism for checking the direction of said current flow, signals, said means effective when said current flow is in reverse direction for holding said connection, and means for operating certain of said signals when the connection is held to indicate that said current flow is reversed.

3. In an automatic telephone system, subscriber's lines, terminals therefor, connector switches having direct access to said terminals, each of said connector switches having two line conductors and a release conductor, a test mechanism, a trunk line comprising two line conductors and one release conductor, automatic switching means, means for operating said switching means to connect said test mechanism with a connector over said trunk line, the conductors of said trunk line being connected to corresponding conductors of said connector when connection is established between said test mechanism and said connector, means in said con-

nector for connecting ground potential to said release conductor, supervisory means in said test mechanism responsive to the connection of ground potential to said release conductor, said means in said test mechanism effective in the absence of said ground potential for holding said connection, signals, and means for operating certain of said signals to indicate the failure of said connector to connect ground potential to said release conductor.

4. In an automatic telephone system, connector switches having access to subscribers' lines, a test line common to said connectors and accessible thereto, said test line comprising a pair of line conductors and a private conductor, a trunk line, a test mechanism, switching means, means for actuating said switching means to connect said test mechanism with a connector by way of said trunk line, means for connecting said test line to said test mechanism, means for then operating said connector to establish connection with said test line, means in said connector for connecting ground potential to said private conductor, supervisory means in said test mechanism responsive to the grounding of said private conductor, said supervisory means effective in the absence of said ground potential for holding said connections, signals, and means for operating said signals to indicate that the connector has failed to connect ground potential to said private conductor.

5. In an automatic telephone system, connector switches having access to subscribers' lines, a test line common to said connectors and accessible thereto, said test line comprising a pair of line conductors and a private conductor, a trunk line, a test mechanism, switching means, means for actuating said switching means to connect said test mechanism with a connector by way of said trunk line, means for connecting said test line to said test mechanism, means for then operating said connector to establish connection with said test line, supervisory means in said test mechanism for controlling the operations of said connector incident to establishing connection with said test line, signals, means in said test mechanism controlled by said supervisory means and effective if said connector fails to establish connection with said test line for holding said connections and for operating said signals.

6. In an automatic telephone system, connector switches having access to subscribers' lines, a test line common to said connectors and accessible thereto, said test line comprising a pair of line conductors and a private conductor, a trunk line including a resistance in series therewith, a test mechanism, switching means, means for actuating said switching means to connect said test mechanism with a connector by way of said trunk line, means for connecting said test line with said test mechanism, means for then operating said connector over said trunk line including said resistance to establish connection with said test line, supervisory means in said test mechanism for controlling the operations of said connector incident to being actuated over said trunk line including said resistance, signals, and means in said test mechanism controlled by said supervisory means and effective if the connector fails to respond properly for holding said connections and for operating said signals.

7. In an automatic telephone system, connector switches having access to subscribers' lines, a test line having a pair of line conductors common to said connectors and accessible thereto, a test mechanism, switching means, means for operating said switching means to establish connection between said test mechanism and a connector, means for connecting said test line with said mechanism, means including a two-conductor trunk line for then operating said connector into engagement with said test line, means in said connector for transmitting ringing current over said test line, supervisory means in said test mechanism responsive to said ringing current, signals, said supervisory means effective in the absence of ringing current for holding said connections and for operating said signals.

8. In an automatic telephone system, connector switches having access to subscribers' lines, a test line having a pair of line conductors common to said connectors and accessible thereto, a test mechanism, switching means, means for operating said switching means to establish connection between said test mechanism and a connector, means for connecting said test line with said mechanism, means including a two-conductor trunk line for operating said connector into engagement with test line, means in said connector for transmitting ringing current over said test line, a ring cut-off rleay connected in the ringing current path of the connector and unresponsive during the transmission of ringing current, a ring-test relay in said test mechanism responsive to said ringing current, means in said test mechanism for shunting said ring-test relay by a high resistance path, said ring-cut-off relay in the connector being normally unresponsive to said shunting of the ring-test relay, signals, and means in said test mechanism effective if said cut-off relay actuates over said high resistance shunt for holding said connections and for operating certain of said signals to indicate that the connector has prematurely disconnected ringing current.

9. In an automatic telephone system, connector switches having access to subscribers' lines, a test line having a pair of line conductors common to said connectors and accessible thereto, a test mechanism, switching

means, means for operating said switching means to establish connection between said test mechanism and a connector, means for connecting said test line with said mechanism, means including a two-conductor trunk line for then operating said connector into engagement with said test line, means in said connector for transmitting ringing current over said test line, a ring-cut-off relay in said connector for discontinuing the transmission of ringing current, signals, and means in said test mechanism effective if said ring-cut-off relay fails to disconnect ringing current for holding said connections and for operating said signals.

10. In an automatic telephone system, connector switches having access to subscribers' lines, a test line having a pair of line conductors common to said connectors and accessible thereto, a test mechanism, switching means, means for operating said switching means to establish connection between said test mechanism and a connector, means for connecting said test line with said mechanism, means including a two-conductor trunk line for then operating said connector into engagement with said test line, means in said connector for transmitting ringing current over said test line to said test mechanism, a ring cut-off relay in the connector connected in the ringing current path and unresponsive during the transmission of ringing current, means in said test mechanism for connecting a low resistance direct current path across said test line, said ring-cut-off relay in the connector being normally operatively responsive over said path, signals, and means in said test mechanism effective if said ring-cut-off relay fails to operate for holding said connections and for operating said signals.

11. In an automatic telephone system, connector switches having access to subscribers' lines, a test line having a pair of line conductors common to said connectors and accessible thereto, a test mechanism, switching means, means for operating said switching means to establish connection between said test mechanism and a connector, means for connecting said test line with said mechanism, means including a two-conductor trunk line for operating said connector into engagement with said test line, means in said connector for transmitting ringing current over said test line to said test mechanism, a ring-cut-off relay in said connector for disconnecting ringing current from said test line, means operated by said ring-cut-off relay for reversing the current-flow over said trunk line, supervisory means in said test mechanism responsive to said current reversal, signals, said supervisory means in said test mechanism effective in the absence of said current reversal for holding said connections and for operating said signals.

12. In an automatic telephone system, connector switches having access to subscribers' lines, a test line having a pair of line conductors common to said connectors and accessible thereto, a test mechanism, switching means, means for operating said switching means to establish connection between said test mechanism and a connector, means for connecting said test line with said mechanism, means including a two-conductor trunk line for operating said connector into engagement with said test line, means in said connector for transmitting ringing current over said test line, a ring-cut-off relay in said connector for disconnecting said ringing current, means operated by said ring-cut-off relay for reversing the current flow over said two-conductor trunk line, supervisory means in said test mechanism responsive to said current reversal, signals, said supervisory means in said test mechanism effective in the absence of said current reversal for holding said connections and for operating said signals to indicate that the connector has failed to reverse the current flow over said trunk line incident to disconnecting the ringing current from said test line.

13. In an automatic telephone system, connector switches having access to subscribers' lines, a test line having a pair of line conductors common to said connectors and accessible thereto, a test mechanism, switching means, means for operating said switching means to establish connection between said test mechanism and a connector, means for connecting said test line with said mechanism, means including a two-conductor trunk line for operating said connector into engagement with said test line, means in said connector for transmitting ringing current over said test line, a ring-cut-off relay in said connector for disconnecting said ringing current, means operated by said ring-cut-off relay for transmitting direct current to said test mechanism over said test line, supervisory means in said test mechanism responsive to said direct current, signals, said supervisory means effective in the absence of said direct current for holding said connections and for operating said signals.

14. In an automatic telephone system, connector switches having access to subscribers' lines, a test line having a pair of line conductors common to said connectors and accessible thereto, a test mechanism, switching means, means for operating said switching means to establish connection between said test mechanism and a connector, means for connecting said test line with said mechanism, means including a two-conductor trunk line for operating said connector into engagement with said test line, means in said connector for transmitting ringing current over said test line, a ring-cut-off relay in said connector for disconnecting said ringing current and for connecting a direct source to said test

line, supervisory means in said test mechanism responsive to said current source if the current flow is in the proper direction, signals, said supervisory means effective if said current flow over the test line is in reversed direction for holding said connections and for operating said signals.

15. In an automatic telephone system, connector switches having access to subscribers' lines, a test line having a pair of line conductors common to said connectors and accessible thereto, a test mechanism, switching means, means for operating said switching means to establish connection between said test mechanism and a connector, means for connecting said test line with said mechanism, means including a two-conductor trunk line for then operating said connector into engagement with said test line, inductive paths in the connector provided for the transmission of voice currents, supervisory means in said test mechanism for controlling said paths, signals, said supervisory means effective if said voice current paths are faulty for holding said connections and for actuating said signals.

16. In an automatic telephone system, connector switches having access to subscribers' lines, a test line having a pair of line conductors common to said connectors and accessible thereto, a test mechanism, switching means, means for operating said switching means to establish connection between said test mechanism and a connector, means for connecting said test line with said mechanism, means including a two-conductor trunk line for operating said connector into engagement with said test line, inductive paths in said connector provided for the transmission of voice currents, means in said test mechanism for transmitting current to said connector over said test line substantially of the intensity and frequency of voice currents, said current traversing the voice current transmission paths in said connector and being transmitted back to said test equipment over said trunk line, supervisory means in said test mechanism responsive thereto, signals, said supervisory means effective in the absence of said current transmitted over the voice current transmission paths for holding said connections and for operating said signals.

17. In an automatic telephone system, connector switches having access to subscribers' lines, a test line having a pair of line conductors common to said connectors and accessible thereto, a test mechanism, switching means, means for operating said switching means to establish connection between said test mechanism and a connector, means for connecting said test line with said mechanism, means including a two-conductor trunk line for operating said connector into engagement with said test line, inductive paths in said connector provided for the transmission of voice currents, means in said test mechanism for transmitting current to said connector over said test line substantially of the intensity and frequency of voice currents, said current traversing the voice current transmission paths of the connector and being transmitted back to said test mechanism over said trunk line, an amplifier in said test mechanism, means for connecting said amplifier to said trunk line to receive said current and to amplify the same, means responsive to said amplified current, signals, said last means in said test mechanism effective in the absence of said current transmitted over the voice current transmission paths for holding said connections and for operating said signals.

18. In an automatic telephone system, connector switches, a test mechanism therefor, a test line accessible to said connectors, means for connecting said test mechanism with a connector, means for connecting said test line with said test mechanism, means in said test mechanism for operating said connector into engagement with said test line, said connector having two line conductors and one release conductor, said line conductors forming two inductively united sections, the first section forming a loop circuit including conductors of said trunk line, said second section forming a loop circuit including conductors of said test line, supervisory means in said test mechanism connected to said loop circuits, separate means in said connector controlled over the loop circuits of said first and said second sections respectively, for connecting ground potential to said release conductor, means in said test mechanism for interrupting the loop circuit of said first section only, means in said connector responsive to said interruption for removing said ground potential from said release conductor, and other supervisory means in said test mechanism responsive to the removal of said ground potential, signals, said other supervisory means in said test mechanism effective if the connector fails to remove said ground potential for holding said connections and for operating said signals.

19. In an automatic telephone system, connector switches, a test mechanism therefor, a test line accessible to said connectors, means for connecting said test mechanism with a connector, means for connecting said test line with said test mechanism, means in said test mechanism for operating said connector into engagement with said test line, said connector having two line conductors and one release conductor, said line conductors forming two inductively united sections, the first section forming a loop circuit including conductors of said trunk line, said second section forming a loop circuit including conductors of said test line, supervisory means in said test mechanism connected to said loop circuits, separate

means in said connector controlled over the loop circuits of said first and said second sections respectively, for connecting ground potential to said release conductor, means in said test mechanism for interrupting the loop circuit of said first section only, means in said connector responsive to said interruption for momentarily removing said ground potential from said release conductor, other supervisory means in said test mechanism responsive to the momentary removal of said ground potential, signals, said other supervisory means in said test mechanism operable if the connector fails to momentarily remove said ground potential for holding said connections and for actuating said signals.

20. In an automatic telephone system, connector switches, a test mechanism therefor, a test line accessible to said connectors, means for connecting said test mechanism with a connector, means for connecting said test line with said test mechanism, means in said test mechanism for operating said connector into engagement with said test line, said connector having two line conductors and one release conductor, said line conductors forming two inductively united sections, the first section forming a loop circuit including conductors of said trunk line, said second section forming a loop circuit including conductors of said test line, supervisory means in said test mechanism connected to said loop circuits, separate means in said connector controlled over the loop circuits of said first and said second sections respectively, for connecting ground potential to said release conductor, means in said test mechanism for interrupting the loop circuit of said first section only, means in said connector responsive to said interruption for removing said ground potential from said release conductor, means in said connector for re-connecting ground potential to said release conductor, other supervisory means in said test mechanism responsive to said reconnection of ground potential, signals, said other supervisory means in said test mechanism effective if the connector fails to re-connect said ground potential for holding said connections and for operating said signals.

21. In an automatic telephone system, connector switches for establishing connections between calling lines and called lines, a test line common to said connectors and accessible thereto, said test line comprising a pair of line conductors and a private conductor, a trunk line comprising two line conductors shunted by a test resistance, a test mechanism for testing said connector switches, means for connecting said test line with said test mechanism, means in said test mechanism for connecting a guarding potential to the private conductor of said test line to busy the same, means in said test mechanism for then actuating a connector over said shunted trunk line to establish connection with the busied test line, a busy relay in said connector operatively responsive to said guarding potential on said private conductor of said test line incident to the connector establishing connection therewith, a supervisory relay in the test equipment connected to said private conductor, said supervisory relay operatively responsive in series with said test relay in said connector, signals, and means in the test mechanism controlled by said supervisory relay and effective if said connector fails to establish connection with said busied test line, for operating said signals.

22. In an automatic telephone system, connector switches for establishing connections between calling lines and called lines, a test line common to said connectors and accessible thereto, said test line comprising a pair of line conductors and a private conductor, a trunk line comprising two line conductors shunted by a test resistance, a test mechanism for testing said connector switches, means for connecting said test line with said test mechanism, means in said test mechanism for connecting a guarding potential to the private conductor of said test line to busy the same, means in said test mechanism for actuating a connector over said shunted trunk line to establish connection with the busied test line, signals, supervisory means in said test mechanism for controlling the operation of said connector incident to establishing connection with said busy test line, and means controlled by said supervisory means for holding said connections and for operating said signals if said connector fails to establish connection with said busy test line.

23. In an automatic telephone system, connector switches, a test line common to said connector switches and accessible thereto, a test mechanism including a two-conductor trunk line shunted by a test resistance, means for connecting said test line with said lest mechanism, means for connecting a guarding potential to said test line to busy the same, means for connecting said mechanism with a connector, means for actuating said connector over said shunted trunk line to establish connection with said busy test line, signals, supervisory means in said test mechanism for controlling the operations of said connector incident to establishing connection with said busy test line, and means controlled by said supervisory means for operating said signals if said connector fails to establish connection with said busy test line.

24. In an automatic telephone system, connector switches, a test line common to said connector switches and accessible thereto, a test mechanism including a two-conductor trunk line shunted by a test resistance, means for connecting said test line with said test mechanism, means for connecting a guarding

potential to said test line to busy the same, means for connecting said mechanism with a connector, means for actuating said connector over said shunted trunk line to establish connection with said busy test line, means in said connector for applying a busy tone to said trunk line, supervisory means in said test mechanism responsive to said busy tone, signals, and means controlled by said supervisory means and effective in the absence of said busy tone for holding said connections and for operating said signals.

25. In an automatic telephone system, connector switches, a test line common to said connector switches and accessible thereto, a test mechanism including a two-conductor trunk line shunted by a test resistance, means for connecting said test line with said test mechanism, means for connecting a guarding potential to said test line to busy the same, means for connecting said mechanism with a connector, means for actuating said connector over said shunted trunk line to establish connection with said busy test line, means in said connector for applying a busy tone to said trunk line, an amplifier in said test mechanism, means for connecting said amplifier to said trunk line to receive said busy tone and to amplify the same, relay means responsive to said amplified busy tone, signals, and means effective in the absence of said busy tone for holding said connections and for operating said signals.

26. In an automatic telephone system, connector switches each having two talking conductors, a test mechanism, means for connecting said test mechanism with a connector, means in said connector for transmitting a busy signal over one of said talking conductors to said test mechanism, supervisory means in said test mechanism responsive to said busy signal, alarm signals, said supervisory means effective if said connecter fails to transmit said busy signal for holding said connection and for actuating said alarm signals.

27. In an automatic telephone system, subscribers' lines, terminals therefor, connector switches having direct access to said terminals, a testing mechanism for said switches, means in said testing mechanism for progressively establishing connection with said connectors in consecutive order, means for subjecting a connector to a series of test operations, supervisory means for controlling the execution of said operations, signals, said supervisory means effective if a connector fails to properly execute said test operations for arresting said test operations, for maintaining the connection with said faulty connector and for operating certain of said signals to indicate said faulty connector and the nature of the fault.

28. In an automatic telephone system, subscribers' lines, terminals therefor, connector switches having direct access to said terminals, a testing mechanism, means in said testing mechanism for progressively establishing connection with said connectors in consecutive order, means for subjecting a connector to a series of test operations, supervisory means for controlling the execution of said operations, signals, means for operating said signals to indicate the connector which is being tested, means for stopping the test, means for operating said stopping means after the last connector has been tested, an audible alarm signal and a visual alarm signal, and means controlled by said stopping means for operating said alarm signals to indicate that the last switch in consecutive order has been tested.

29. In an automatic telephone system, subcriber's lines, terminals therefor, connector switches having direct access to said terminals, a testing mechanism, means in said testing mechanism for progressively establishing connection with said connector switches in consecutive order regardless whether said connectors are busy or idle, means operable when an idle connector is connected with for progresisvely subjecting said connector without delay to a series of test operations, timing means, supervisory means operable when a busy connector is connected with for starting said timing means and for preventing the execution of said test operations, signals, and means controlled by said timing means for operating said signals to indicate that connection is established with a busy connector.

30. In an automatic telephone system, connector switches, a testing mechanism therefor, means in said testing mechanism for progressively establishing connection with said connector switches in consecutive order regardless whether said connectors are busy or idle, means operable when an idle connector is connected with for progressively subjecting said connector without delay to a series of test operations, timing means, supervisory means operable when a busy connector is connected with for starting said timing means and for preventing the execution of said test operations, and means controlled by said supervisory means and operable if the connector becomes idle within a certain time determined by said timing means for starting the application of said test operations and for releasing said timing means.

31. In an automatic telephone system, connector switches, a testing mechanism therefor, means in said testing mechanism for progressively establishing connection with said connector switches in consecutive order regardless whether said connectors are busy or idle, means operable when an idle connector is connected with for progressively subjecting said connector without delay to a series of test operations, timing means, supervisory means operable when a busy connector is con-

nected with for starting said timing means and for preventing the execution of said test operations, means operated when the busy connector becomes idle within a certain time for releasing said timing means and for starting said series of test operations, signals, and means operated by said timing means if the connector remains busy for a certain period of time determined by said timing means for operating said signals to indicate that said test mechanism is camping on a busy connector.

32. In an automatic telephone system, connector switches, a testing mechanism therefor, switching means for connecting said testing mechanism with a connector, means in said mechanism for subjecting said connector to a series of test operations, means effective after the connector has properly executed said test operations for actuating said switching means to connect said testing mechanism with the next connector in consecutive order regardless whether said connector is busy or idle, means operable when said connector is busy for delaying the execution of said test operations for a certain period of time, means for applying said test operations to said connector if said connector becomes idle within said time period, an alarm signal, means operated at the expiration of said time period for operating said alarm signal, and manually operated means for disconnecting said testing mechanism from said busy connector.

33. In an automatic telephone system, subscriber's lines, terminals therefor, connector switches having direct access to said terminals, a testing mechanism, means for progressively connecting said mechanism with said connectors in consecutive order regardless whether a connector is busy or idle, means in said mechanism operated when an idle connector is connected with for subjecting said connector to a series of test operations, means for stopping the progress of the test if said connector does not properly execute said operations, means for stopping the progress of the test if connection is established with a busy connector, signals, means operated by said stopping means for operating said signals to indicate that a connector has defaulted or that the testing mechanism has engaged a busy connector, means for stopping the operations of said test mechanism after the last connector in consecutive order has been tested, other signals, and means for operating said other signals to indicate that the test has terminated.

34. In an automatic telephone system, subscriber's lines, terminals therefor, connector switches having direct access to said terminals, a testing mechanism, an alarm signal, switching means for selecting a connector and for linking said connector with said testing mechanism, means in said testing mechanism operated when connection is established with an idle connector for subjecting said connector to a series of test operations, means in said test mechanism operated when connection is established with a busy connector for preventing the application of said test operations and for operating said alarm signal, and manually operable means for preventing said switching means to link said testing mechanism with busy connectors.

35. In an automatic telephone system, subscriber's lines, terminals therefor, connector switches having direct access to said terminals, a testing mechanism, switching means having a test relay and a test wiper for selecting a connector and for linking said connector with said testing means, a manually operable key in circuit with said test relay, means operated by said test relay when said key is normal for operating said switching means to establish connection with a connector regardless whether said connector is busy or idle, and means operated by said test relay when said key is actuated for operating said switching means to establish connection with an idle connector only.

36. In an automatic telephone system, subscriber's lines, terminals therefor, connector switches having direct access to said terminals, a test mechanism having test switches for connecting said test mechanism with said connector switches, a test relay, a manually operable key in series with said test relay, means operated by said test relay when said key is normal for actuating said test switches to connect a connector switch with said test mechanism regardless whether said connector is busy or idle, and means operated by said test relay when said key is actuated for operating said test switches to omit busy connectors and to establish connection only with idle connector switches.

37. In an automatic telephone system, subscriber's lines, terminals therefor, a plurality of groups of connectors having direct access to said terminals, a routine-test mechanism, switching means for establishing connection between said test mechanism and said connectors, means in said mechanism for subjecting a connector to a series of test operations and for supervising the proper execution of said operations, an alarm signal, means for operating said signal if a connector fails to properly execute one of said test operations, manually operable means for controlling the circuits of said switching means to connect said test mechanism to all connector switches of all groups in consecutive order, means for operating said alarm signal and for stopping the test mechanism after the last connector switch of the last group has been tested, manually operable means for controlling the circuits of said switching means to connect said test mechanism only to the connector

switches of a certain group in consecutive order, means for operating said alarm and for stopping said test mechanism after the last connector switch in that group has been tested, and manually operable means for controlling the circuits of said switching means and of said test mechanism to repeatedly test only a certain one of said connector switches.

38. In an automatic telephone system, subscriber's lines, terminals therefor, a plurality of groups of connector switches having direct access to said terminals, a test mechanism having test switches for establishing connection with said connectors, manually operated means for controlling said test switches to establish connection with all of said connectors of all groups in consecutive order, manually operated means for controlling said test switches and said test mechanism to establish connection only with the connector switches of a certain group, and manually operated means for controlling said test mechanism and said test switches to establish only connection with a certain connector switch to the exclusion of all other connectors.

39. In an automatic telephone system, subscriber's lines, terminals therefor, a plurality of groups of connector switches having direct access to said terminals, a routine-test mechanism for testing the functions of said switches, means in said mechanism for indicating a faulty connector switch and the precise nature of a fault, manually operated means for controlling said test mechanism to test all connector switches of all groups in consecutive order, manually operable means for controlling said test mechanism to test all connector switches of a certain group only, and manually operated means for controlling said test mechanism to repeatedly test only a certain connector switch in a certain group.

40. In an automatic telephone system, subscriber's lines, terminals therefor, a plurality of groups of connector switches having direct access to said terminals, a routine-test mechanism, manually operated means for controlling said mechanism to establish connection with said connector switches in consecutive order and to apply a series of test operations to each connector, supervisory means in said mechanism for controlling the execution of said test operations, an alarm signal, means for operating said alarm signal if a connector fails to properly execute said operations, and means for operating said alarm signal after the last connector of the last group has been tested.

41. In an automatic telephone system, subscriber's lines, terminals therefor, a plurality of groups of connector switches having direct access to said terminals, a routine test mechanism, manually operated means for controlling said mechanism to establish connection only with the connector switches of a certain group in consecutive order and to apply a series of test operations to each connector, signals, supervisory means in said test mechanism for operating said signals to indicate a faulty connector and the precise nature of the fault, an alarm signal, and means in said test mechanism for operating said alarm signal after the last connector of the group has been tested.

42. I an automatic telephone system, subscriber's lines, terminals therefor, connector switches having direct access to said terminals, a test mechanism, manually operated means for selecting a certain one of said connector switches, manually operated means for controlling said test mechanism to automatically establish connection with said connector switch and to subject said connector repeatedly to a series of test operations, signals, and means in said test mechanism to actuate said signals to indicate a fault found in said connector.

43. In an automatic telephone system, connector switches for connecting calling lines with called lines under control of calling lines, a test line common to said connectors and accessible thereto, a test mechanism having switching means for establishing connection with a connector, a two-conductor trunk line in said mechanism including a test resistance in series therewith, means for actuating said connector over said trunk line into engagement with said test line, means for connecting said test line with said test mechanism, supervisory means for controlling the operations of said connector incident to establishing connection with said test line, means for releasing said connector, means for applying a guarding potential to said test line to busy the same, means for excluding said series resistance from said trunk line and for connecting a shunt resistance across the conductors thereof, means for operating said connector over said trunk line into engagement with said busied test line, supervisory means for controlling the operations of said connector incident to establishing connection with said busied test line, signals, and means controlled by said supervisory means for operating said signals if said connector fails to properly execute the operations incident to establishing connection with said test line, said signals indicating the precise nature of the fault of said connector.

44. In an automatic telephone system, connector switches, a test mechanism therefor, a test line accessible to said switches, means for connecting said test line with said mechanism, means for connecting said mechanism with said connector, means for operating said connector into engagement with said test line, means in said mechanism to transmit current to said connector, means in said connector to inductively transmit said current back to said mechanism, means in said mech-

anism to receive said current and to register its arrival, signals, and means for operating said signals if said current is not properly re-transmitted to said test mechanism.

45. In an automatic telephone system, connector switches, a test mechanism therefor, means for connecting said mechanism with one of said connectors, means in said mechanism for transmitting current to said connector, means in said connector for inductively re-transmitting said current to said mechanism, signals, and means for actuating said signals if said current is not properly re-transmitted.

46. In an automatic telephone system, a plurality of switches for establishing connections between calling and called lines, a routine test mechanism for automatically testing said switches, means in said mechanism for automatically and successively connecting with said switches, means for transmitting current to each switch connected with, means for inductively re-transmitting said current to said mechanism, an amplifier for receiving said re-transmitted current, signals, and means for actuating said signals if said current is not properly re-transmitted.

47. In an automatic telephone system, switches, a routine test mechanism therefor, a test line accessible to said switches, means for connecting said test line with said mechanism, means for connecting said mechanism with a switch, means for operating said switch into engagement with said test line, means in said switch for inductively transmitting current to said mechanism to indicate its busy condition, signals, and means in said mechanism for actuating said signals if said current is not properly transmitted.

48. In an automatic telephone system, switches, a test mechanism therefor, means for connecting said mechanism with a switch, means in said switch for inductively transmitting a busy signal to said mechanism, an amplifier for receiving said busy signal, alarm signals, and means for operating said alarm signals if said busy signal is not properly transmitted.

49. In an automatic telephone system, a plurality of switches for establishing connections between calling and called lines, a routine test mechanism for said switches, means for automatically and successively connecting said mechanism with said switches, means for transmitting current to a switch connected with for testing the condition of its circuits, means in said switch for inductively re-transmitting said current to said mechanism, means in said switch for transmitting a busy signal to said mechanism to indicate its busy condition, means in said mechanism for receiving said re-transmitted current and said busy signal, alarm signals, and means for actuating said alarm signals if either said busy signal or said re-transmitted current is not properly received.

50. In an automatic telephone system, a plurality of switches, a test mechanism therefor, means for automatically and successively connecting said mechanism with said switches, means in said mechanism for transmitting current to a switch connected with for testing the condition of its circuits, means in said switch for inductively re-transmitting said current to said mechanism, means in said switch for transmitting a busy signal to said mechanism to indicate its busy condition, an amplifier in said mechanism for receiving said re-transmitted current and said busy signal, alarm signals, and means for actuating said alarm signals if either said busy signal or said re-transmitted current is not properly received.

51. In a telephone system, switches, a test mechanism therefor, a test line, means for connecting said mechanism with said line, means for connecting said mechanism with a switch, means for actuating said switch to connect with said test line, means in said switch for transmitting current over said test line to said mechanism, means in said mechanism for checking the direction of said current, signals, and means in said mechanism for operating said signals if said current is not properly transmitted or in the wrong direction.

52. In a telephone system, switches, a test mechanism therefor, a test line, means for connecting said line to said mechanism, means for connecting said mechanism with a switch, means for actuating said switch to connect with said test line, means in said switch for transmitting current over said test line to said mechanism, means in said mechanism for checking the polarity of said current, alarm signals, and means in said mechanism for operating said signals if said current is not properly transmitted or if its polarity is reversed.

53. In a telephone system, switches, a test mechanism therefor, means for connecting said mechanism with a switch, movable wipers in said switch for establishing connection with terminals of called lines, means in said switch for connecting current to said wipers, means for transmitting said current to said mechanism for checking its polarity, alarm signals, and means for operating said alarm signals if said current is not properly connected to said wipers or if the polarity is reversed.

54. In an automatic telephone system, connector switches, a testing mechanism, means for associating said mechanism with one of said connectors, a test relay in said mechanism, means for conditioning said relay to operate partially or fully when said mechanism is associated with a busy connector, means responsive to the full operation of said

relay for connecting said mechanism to said busy connector, and means responsive to the partial operation of said relay for preventing the connection of said mechanism to said busy connector.

55. In an automatic telephone system, connector switches, a testing mechanism, switching means for associating said mechanism with said connectors one after another, means in said mechanism responsive to its association with an idle connector for operating the connector and testing the functions thereof, a test relay in said mechanism, means for conditioning said relay to operate fully or partially when said mechanism is associated with a busy connector, means responsive to the full operation of said relay for holding said mechanism associated with said busy connector, and means responsive to the partial operation of said relay for operating said switching means to associate said mechanism with another connector.

In witness whereof, I hereunto subscribe my name this 18th day of April, A. D. 1927.

MARTIN L. NELSON.