March 17, 1970 M. L. ROBERTSON 3,500,751

SAFETY SWITCH CIRCUIT

Filed July 27, 1967

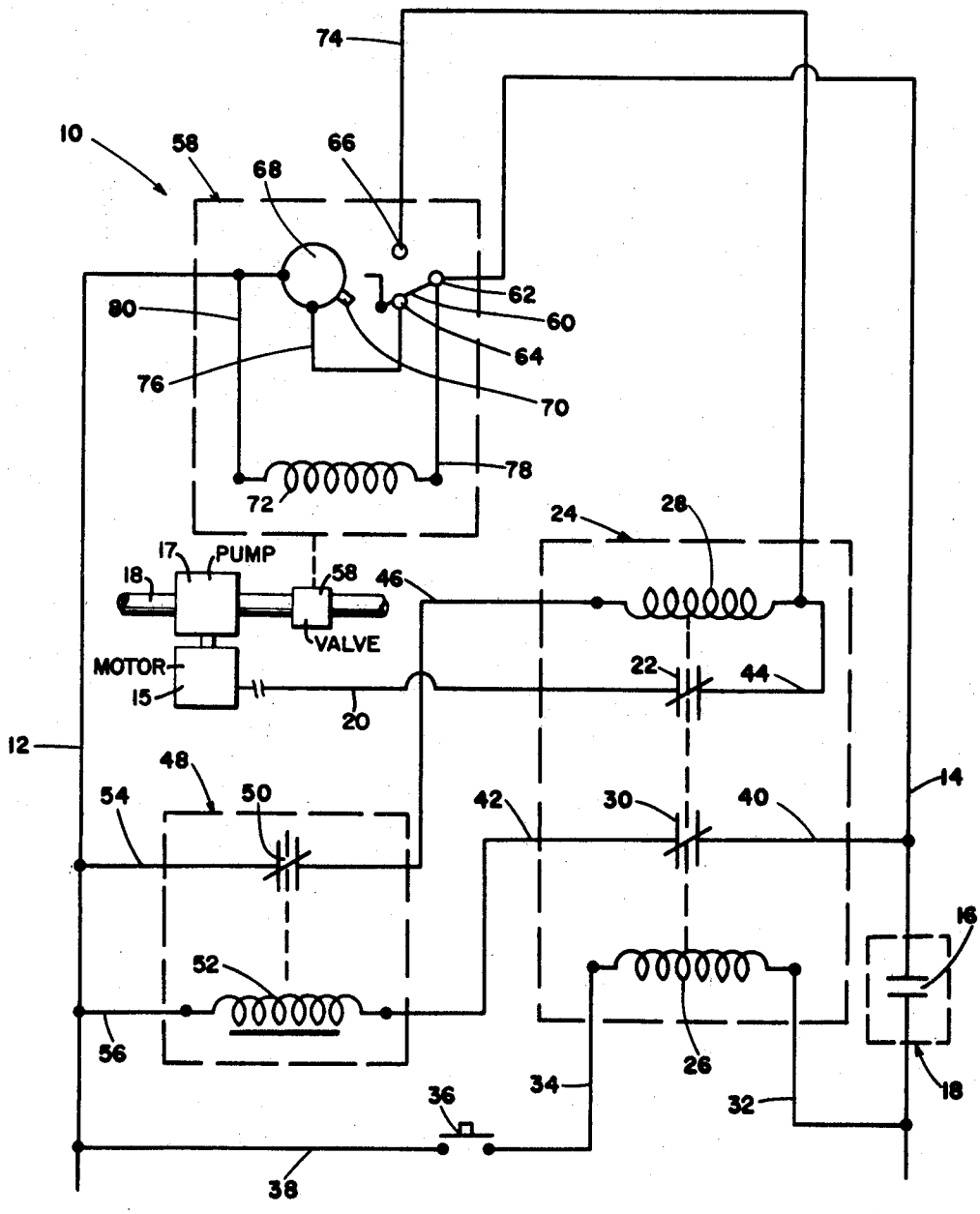

INVENTOR

MELBORNE L. ROBERTSON

United States Patent Office 3,500,751
Patented Mar. 17, 1970

3,500,751

SAFETY SWITCH CIRCUIT

Melborne L. Robertson, Laird Hill, Tex., assignor to Gulf Oil Corporation, Pittsburgh, Pa., a corporation of Pennsylvania

Filed July 27, 1967, Ser. No. 656,372
Int. Cl. F04b 49/00, 47/06, 49/10
U.S. Cl. 103—12 8 Claims

ABSTRACT OF THE DISCLOSURE

The invention comprises an arrangement of a latching relay and a time delay relay between a switch and a power line to a point of use, arranged so that power will not be fed through the power line until a predetermined time has passed to thereby prevent feeding power to the point of use prematurely in the event of malfunctions of the switch.

This invention relates to a circuit having means to assure that a first switch is closed before current is passed through a second switch to a point of use. More particularly, the invention is adapted for use with automatic oil well pumping equipment wherein a timing device causes a valve on the well to open, and upon said valve being opened, a pump is turned on to operate the well, but, of course, the invention is not limited to use in the oil industry.

In such automatic oil well pumping operations, one problem which arises is that the pump is sometimes turned on before the valve is opened. This problem most often arises due to malfunctions in a microswitch which is normally moved to the closed position by a portion of the valve when the valve is fully opened. If the microswitch should fail, or should stick in the closed position, the pump motor will be turned on and the pump will operate against a closed valve which results in damage or destruction of various other pieces of equipment, such as ruptured packings in the stuffing box, ruptured flow lines, and the like. Such accidents can be very expensive since the released oil can damage crops, pastures, farmland, buildings, highways, and the like. The elimination of such property damages is an important advantage of the present invention. Another type of switch malfunction which can cause the pump to operate against a closed valve are breakdowns in the mechanical linkage of the microswitch, which has the same effect as a failure or sticking of the microswitch itself.

This invention provides a simple and relatively inexpensive circuit which can be incorporated into existing equipment, usually in the existing panel box housing the automatic equipment associated with the well, to solve the above problems.

The invention comprises a double throw latching relay and a time delay relay in combination with the existing time clock mechanism associated with the automatic well pumping equipment, which insures that current cannot be sent to the well pump motor until the valve is completely open.

In the accompanying drawing forming a part of this disclosure, the single is an electrical schematic of one embodiment of the invention.

Referring now in detail to the drawing, **10** designates a circuit embodying the invention. Circuit **10** includes a pair of main power lines **12** and **14**. Line **14** is controlled by a normally open switch **16** incorporated in a master time clock **18**, and line **12** may be grounded. As is well known to those skilled in this art, oil wells are usually pumped for only intermediate periods because of technical considerations such as reservoir depletion, and because of legal considerations such as the various conservation laws. For example, it may be desired to pump oil from the well

controlled by circuit **10** for, for example, three hours out of each twelve hour period. In any case, the pumping time is built into the time clock **18** in well known manner and clock **18** will close normally open switch **16** and hold it closed for the preset periods. Thus, switch **16** closes in accordance with the preset schedule in time clock **18**, and remains closed for periods of time equal to the time the oil well pump motor **15** is scheduled to work.

The oil well pump motor is fed current through a line **20** which is controlled by a pair of normally closed contacts **22** on a double throw latching type relay **24**.

The mechanical portions of the system, which do not form a material part of the present invention, include a motor **15**, which drives a pump **17**, which pumps fluid in a pipe **19**, which includes the mechanical portions of the motor valve **58**, the electrical portions of which are described below.

Relay **24** has two coils **26** and **28** and a second pair of normally closed contacts **30**. One side of coil **26** is always connected to power from feed line **14**, before clock **18**, by line **32**. The other side of coil **26** is connected by a line **34** to one side of a normally open, manually operated, push-button type reset switch **36**, the other side of which is connected by line **38** to the other feed line **12**. One side of normally closed contacts **30** is connected to feed line **14**, after clock **18**, by a line **40**, and the other side of said contacts is connected to one end of a line **42**. The other side of the pump controlling contacts **22** is connected by a line **44** to one side of coil **28**, and the other side of said coil is connected to one end of a line **46**. When both coils **26** and **28** are de-activated, the two contacts **22** and **30** are in their normally closed positions. If only coil **28** is activated, the contacts **22** and **30** will be open and relay **24** includes mechanical latching means which locks the contacts in the open position. Thus, activation of coil **28** will prevent any current from passing through line **20**. To reset the circuit, manual reset **36** is momentarily depressed, thereby activating coil **26** which acts to unlock the mechanical latching means holding contacts **22** and **30** open. The cooperation of latching relay **24** with the rest of the circuit will be explained in the operation section below.

Circuit **10** includes a time delay relay **48**, which comprises a single pair of normally closed contacts **50** and a coil **52**. One side of contacts **50** is connected to the other end of line **46**, running from coil **28** on relay **24**, and the other side of said contacts is connected by a line **54** to feed line **12**. One side of coil **52** is connected to the other end of line **42**, and the other side of said coil is connected by a line **56** to feed line **12**. The nature of time delay relay **48** is such that the coil **52** will take current for a predetermined length of time, 10 seconds in the embodiment of the invention being described, before opening the normally closed contacts **50**.

Circuit **10** includes a valve **58** which controls the fluid line **19** through which the fluid pumped by the pump **17** must pass. Such valves are known in the art as "hydromotor" valves, and include a microswitch having a moveable switching member or arm **60**, a central contact **62**, an inactive position contact **64** and an activated position contact **66**. The valve **58** includes a motor, designated **68**, which actually operates the mechanical valve, shown diagrammatically in line **19**, and which also moves an element **70** which cooperates with switch arm **60**. It will be understood that element **70** and the left hand portion of arm **60** diagrammatically represent the mechanical linkage in the switch and valve and that this linkage could be more complicated, depending on the nature of the valve being used. The mechanical arrangements of the parts are such that under normal operating conditions, i.e., where there are no malfunctions, element **70** will move switch arm **60** off of contact **64** and onto contact **66** only when the valve is fully open. Valve **58** also includes

a coil **72** which operates a check valve forming part of the so-called "valve operation." This coil is a safety device forming a part of most conventional valves themselves, and since it is activated for the entire time contacts **16** in the clock **18** are closed, it need not be explained in further detail here.

Feed line **14** is connected to central contact **62** of the microswitch. A line **74** connects contact **66** to line **44** on one side of coil **28** in latching relay **24**. A jumper line **76** connects the remaining contact **64** of the microswitch to one side of the motor **68**. Another jumper line **78**, which is in effect an extension of feed line **14**, interconnects central contact **62** with one side of coil **72**, the other side of which coil is directly connected to the other feed line **12** by a line **80**. Feed line **12** is connected to the remaining contact on motor **68**.

OPERATION

In devices heretofore used, components like clock **18** and valve **58** only were used. The arrangement was such that the point of use, the oil well pump motor **15** in the example being described, was connected directly to contact **66** of the microswitch in valve **58**. With this arrangement, malfunctions in the nature of the switch arm **60** sticking in the activated position, i.e., against contact **66**, resulted in the oil well pump motor being turned on before the line valve was opened, resulting in damage to or destruction of other pieces of well equipment.

The circuit of the present invention avoids the above described undesirable conditions. The operation of the invention will first be described during a normal sequence of operation, and will then be described if there should be a malfunction.

In normal operation, master time clock contacts **16** close in response to the predetermined schedule set on the clock. Line current is fed through line **14** to microswitch contact **62**. From this contact, the current is fed through line **78**, to check valve coil **72**, and to main line **12**. Simultaneously, current is fed through switch arm **60**, contact **64**, jumper **76**, and the motor **68** which immediately starts to open the line valve. In the embodiment being described, motor **68** takes approximately 30 seconds to fully open the mechanical valve.

Simultaneously with initiation of operation of motor **68**, current is fed through line **40**, normally closed contacts **30** on latching relay **24**, through line **42**, through coil **52** of time delay relay **48**, and to feed line **12** via line **56**. After about 10 seconds, the coil heats sufficiently to operate its normally closed contacts **50** and these contacts **50** open.

At the end of the 30 seconds required for the valve to open, element **70** will move switch arm **60** into electrical contacting relation with contact **66**. Current will then flow through line **14**, switch arm **60**, line **74**, line **44**, still normally closed contacts **22**, and through line **20** to the oil well pump motor **15**, or other point of use.

Thus, it can be seen that the time delay built into coil **52** must be less than the time required for motor **68** to open the mechanical valve, since contacts **50** control lines **46** and **54** running to coil **28** of latching relay **24**, and once coil **28** is disabled by the opening of contacts **50**, it is no longer possible for anything to stop current from being fed through line **20** to the point of use.

In the event of any malfunction resulting in switch arm **60** being in contact with contact **66** at the time the normally open contacts **16** in the clock close, line **20** will be disabled and prevention of the pump starting against a closed valve will have been accomplished. The flow path will be through line **14**, malfunctioning switch arm **60** now in contact with contact **66**, line **74**, coil **28** of latching relay **24**, line **46**, still normally closed contacts **50** on the time delay relay **48**, and to line **12** via line **54**. Coil **52** on the time delay relay begins receiving current at the same time as the malfunctioning switch arm in valve **58**, but the time delay feature of coil **52** assures that contacts **50** remain normally closed for a long enough time to disable line **20**.

When the pump motor fails to start, various conventional warning systems, not shown, will automatically come into action to warn an operator at a central location, to sound a bell, or to otherwise make the fact of the malfunction known. Maintenance personnel are sent to the site and correct the malfunction. Upon correction of the malfunction, the reset switch **36** is operated to operate coil **26** via lines **32**, **34** and **38**, thereby returning contacts **22** and **32** to their normally closed position, readying the circuit for future service.

An additional safety feature is that if reset button **36** should be operated before the malfunction is corrected, latching relay **24** will unlatch but then immediately relatch indicating that the malfunction has not been corrected. As shown, it is possible for an operator to circumvent the safety feature of the present invention by holding reset button **36** depressed for a time greater than the time delay built into coil **52** of time delay relay **48**. To circumvent this possibility of human error, it is desirable to provide a reset switch **36** of a type that will permit only momentary contact, thereby preventing this kind of forced override of the safety feature of the present invention.

In the embodiment of the invention which has been built and is being successfully used; relay **24** is a Potter and Brumfield type No. KB17AG 4 pole, double throw latching relay; valve **58** is made by General Controls and is a hydromotor Model A, Cat. No. H 10A–320BICIFIFI-13; and switch **60** is part of the hydromotor valve, one used is a Kalper Switch microswitch Model No. S4A1062.

I claim:

1. A circuit for feeding power to a point of use and to control means associated with said point of use, said control means comprising means to ready said point of use for the reception of power, said readying means requiring a period of time to ready said point of use for the reception of power, said control means comprising conditionable switch means which are conditioned to permit the flow of power to said point of use when said point of use has been readied for the reception of power, and said circuit comprising means to prevent the flow of power to said point of use if said conditionable switch means are prematurely conditioned to permit the flow of power to said point of use.

2. The combination of claim **1**, said control means comprising a motor valve, said conditionable switch means comprising a switch in said motor valve, said point of use comprising a pump adapted to pump fluid through a pipe, said readying means comprising a valve in said pipe operable by said motor valve, said motor valve comprising means to move said switch to a first position wherein power will flow to said pump after said pipe valve has been opened by said motor valve, said preventing means comprising time delay means adapted to prevent the flow of power through said switch to said pump for a period of time equal to the length of the time delay period in said time delay means, and the time delay period of said time delay means being a period of time less than the period of time required for said motor valve to open said pipe valve.

3. The combination of claim **2**, said time delay means comprising a time delay relay, said circuit comprising a second relay, said circuit comprising means to feed power from a power source through said motor valve switch in said first position thereof through a pair of normally closed contacts on said second relay and to said pump, said time delay relay comprising a pair of normally closed contacts, said second relay comprising an operating coil, said circuit comprising connection means adapted to connect said normally closed contacts on said time delay relay with said operating coil of said second relay, said second relay comprising a second pair of normally closed contacts and said circuit comprising series connection means adapted

to connect said second pair of normally closed contacts to the coil of said time delay relay and to a power source independent of said motor valve switch.

4. The combination of claim 3, said second relay comprising latching means adapted to latch said normally closed contacts in the open position when said contacts are moved to the open position by said operating coil, and said second relay comprising manually operated reset means adapted to unlatch said contacts.

5. A remote installation comprising motor valve means having a switch, said installation including pump means, timing means to control the motor valve means and the pump means; circuit means interconnecting the pump means, the motor valve means and the timing means; said circuit means comprising means to feed power to said pump means through said motor valve switch when said motor valve switch is moved to a first position by said motor valve at the end of said motor valve's valve opening operation, and said circuit means comprising means to prevent the flow of power to said pump means if said motor valve switch is in said first position before completion of said motor valve's valve opening operation.

6. The combination of claim 5, said circuit means comprising time delay means having a time delay period shorter than the time required for said motor valve's valve opening operation, and said preventing means being adapted to prevent the flow of power to said pump means during the time delay period of said time delay means.

7. The combination of claim 6, said time delay means comprising a time delay relay, said circuit comprising a second relay, said circuit comprising means to feed power from a power source through said motor valve switch in said first position thereof through a pair of normally closed contacts on said second relay and to said pump

means, said time delay relay comprising a pair of normally closed contacts, said second relay comprising an operating coil, said circuit comprising connection means adapted to connect said normally closed contacts on said time delay relay with said operating coil of said second relay, said second relay comprising a second pair of normally closed contacts, and said circuit comprising series connection means adapted to connect said second pair of normally closed contacts to the coil of said time delay relay and to a power source independent of said motor valve switch.

8. The combination of claim 7, said second relay comprising latching means adapted to latch said normally closed contacts in the open position when said contacts are moved to the open position by said operating coil, and said second relay comprising manually operated reset means adapted to unlatch said contacts.

References Cited

UNITED STATES PATENTS

2,219,359	10/1940	Goit et al.	103—40
2,240,607	5/1941	Buck	103—40
2,384,420	9/1945	Griswold	103—40
2,724,337	11/1955	Teeson	103—25
3,012,510	12/1961	Kusner	103—25
2,658,172	11/1953	Neubauer	317—141
3,322,470	5/1967	MacDonald	317—135

WILLIAM L. FREEH, Primary Examiner

U.S. Cl. X.R.

103—25, 40; 137—624.11; 317—135, 141; 318—103