Office de la Propriété Intellectuelle du Canada
Un organisme d'Industrie Canada

Canadian Intellectual Property Office
An agency of Industry Canada

CA 2683763 C 2013/01/29

(11)(21) **2 683 763**

(12) **BREVET CANADIEN**
CANADIAN PATENT

(13) **C**

(22) **Date de dépôt/Filing Date:** 2004/03/05

(41) **Mise à la disp. pub./Open to Public Insp.:** 2004/09/16

(45) **Date de délivrance/Issue Date:** 2013/01/29

(62) **Demande originale/Original Application:** 2 517 883

(30) **Priorités/Priorities:** 2003/03/05 (US60/451,994); 2003/03/05 (US60/452,269)

(51) **Cl.Int./Int.Cl.** *E21B 7/20* (2006.01), *E21B 7/04* (2006.01)

(72) **Inventeurs/Inventors:**
CARTER, THURMAN B., US;
BRUNNERT, DAVID J., US;
HAUGEN, DAVID M., US

(73) **Propriétaire/Owner:**
WEATHERFORD/LAMB, INC., US

(74) **Agent:** DEETH WILLIAMS WALL LLP

(54) **Titre :** PUITS DE FORAGE TUBES A PASSAGE INTEGRAL
(54) **Title:** FULL BORE LINED WELLBORES

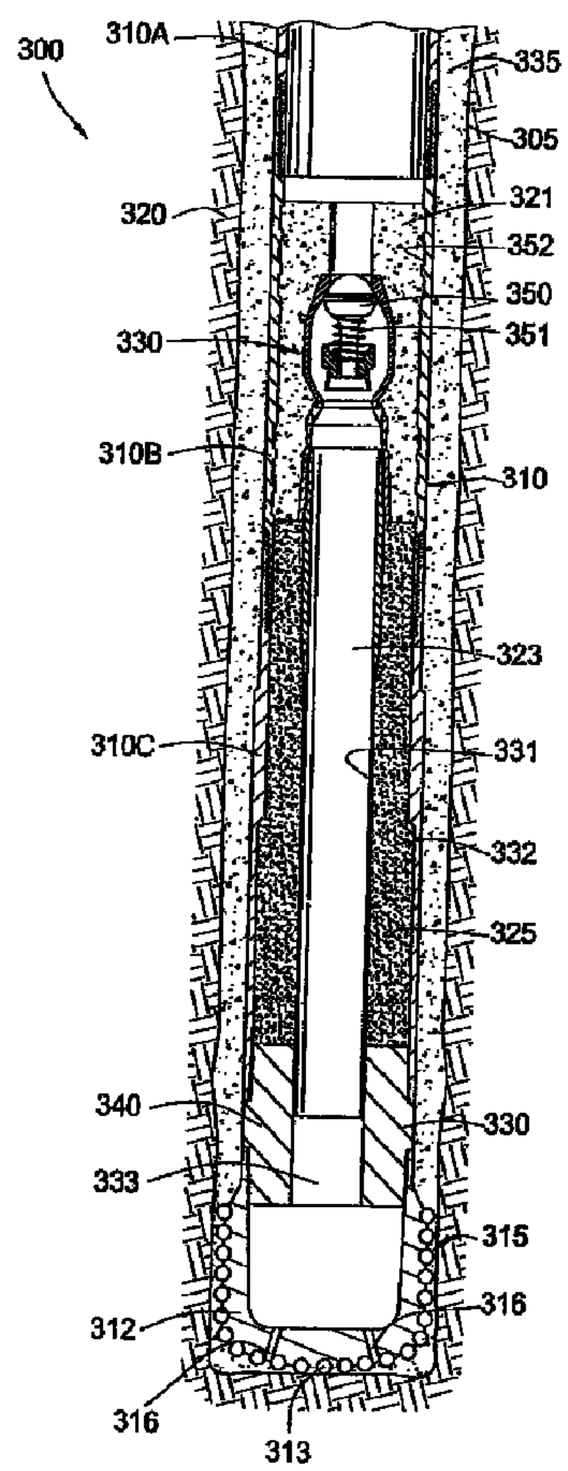

(57) **Abrégé/Abstract:**
Embodiments of the invention relate to an assembly for forming a cased well. The assembly may include an undercut drillable cementing shoe with a casing string connection at a first end. The shoe includes external tubing that forms a second end of the

(57) Abrégé(suite)/Abstract(continued):
shoe and has a first section defining an enlarged inner diameter relative to a second section of the external tubing. The assembly may also include an earth removal member coupled to the second end of the shoe. The first section of the shoe is disposed between the earth removal member and the second section of the shoe. In another embodiment, the assembly may include a casing string having a first portion with a larger inner diameter than a second portion. The assembly may also include an earth removal member coupled to an end of the casing string. The first portion of the casing string is disposed between the earth removal member and the second portion of the casing string.

ABSTRACT

Embodiments of the invention relate to an assembly for forming a cased well. The assembly may include an undercut drillable cementing shoe with a casing string connection at a first end. The shoe includes external tubing that forms a second end of the shoe and has a first section defining an enlarged inner diameter relative to a second section of the external tubing. The assembly may also include an earth removal member coupled to the second end of the shoe. The first section of the shoe is disposed between the earth removal member and the second section of the shoe. In another embodiment, the assembly may include a casing string having a first portion with a larger inner diameter than a second portion. The assembly may also include an earth removal member coupled to an end of the casing string. The first portion of the casing string is disposed between the earth removal member and the second portion of the casing string.

FULL BORE LINED WELLBORES

BACKGROUND OF THE INVENTION

Field of the Invention

Embodiments of the present invention generally relate to drilling and completion of oil and gas wells. More specifically, embodiments of the present invention relate to methods and apparatus for forming a wellbore by drilling with casing. Embodiments of the present invention generally relate, more particularly, to the construction of lateral wellbores.

Description of the Related Art

In the drilling of oil and gas wells, a wellbore is formed in a formation using a drill bit that is urged downwardly at a lower end of a drill string. After drilling a predetermined depth, the drill string and the drill bit are removed, and the wellbore is
20 typically lined with a string of pipe called casing. The casing forms a major structural component of the wellbore and serves several important functions, such as preventing the formation wall from caving into the wellbore, isolating different zones in the formation, preventing the flow of fluids into the wellbore, and providing a means of maintaining control of fluids and pressure while drilling. Casing is available in a range 25 of sizes and material grades, the choice of which is typically determined by a particular application.

The casing typically extends down the wellbore from the surface to a designated depth. Various downhole tools are often run through the casing to perform various operations downhole in the wellbore. Accordingly, the drift diameter of the casing 30 dictates the types of downhole tools that may be run through the casing. Drift diameter

generally refers to the inside diameter that the casing manufacturer guarantees per specifications. In other words, the drift diameter may be used (e.g., by a well planner) to determine what size tools may later be run through the casing.

For various production oriented reasons, it may be desirable to form a lateral (e.g., deviating from vertical) wellbore extending from a main (or "parent") wellbore. For example, because a lateral wellbore typically penetrates a greater length of the reservoir, it may offer significant production improvement over a purely vertical main wellbore. Lateral wellbores extending from a cased main wellbore may be formed by removing a portion of the main wellbore casing to expose a portion of the formation. The lateral wellbore may then be formed by drilling out from the main wellbore through the exposed portion of the formation. Various well-known techniques are available to achieve the desired deviation from the main wellbore when drilling the lateral wellbore.

For the previously described reasons (e.g., support, isolation, etc.), it is also desirable to line a lateral wellbore with casing. However, in order to reach the lateral wellbore, casing used to line the lateral wellbore must pass through the main wellbore casing. Therefore, to run the casing into the lateral wellbore, the outer diameter of the casing used to line the lateral wellbore must be smaller than the inner diameter of the main wellbore casing. Accordingly, casing used to line conventional lateral wellbores has been limited to casing having inner diameters significantly smaller than the main wellbore casing. As a result of this smaller inner diameter, the types of downhole tools that may be run in the lateral wellbore are typically restricted, thereby limiting the types of operations that may be performed therein. Accordingly, what is needed is an improved method for forming a lateral wellbore lined with casing having an enlarged inner diameter relative to casing lining conventional lateral wellbores.

To drill within the wellbore to a predetermined depth in conventional well completion operations, the drill string is often rotated by a top drive or rotary table on a surface platform or rig, or by a downhole motor mounted towards the lower end of the drill string. After drilling to a predetermined depth, the drill string and drill bit are removed and a section of casing is lowered into the wellbore. An annular area is thus formed between the string of casing and the formation. The casing string is temporarily hung from the surface of the well. A cementing operation is then conducted in order to

fill the annular area with cement. Using apparatus known in the art, the casing string is cemented into the wellbore by circulating cement into the annular area defined between the outer wall of the casing and the borehole. The combination of cement and casing strengthens the wellbore and facilitates the isolation of certain areas of the formation behind the casing for the production of hydrocarbons.

It is common to employ more than one string of casing in a wellbore. In this respect, the well is drilled to a first designated depth with a drill bit on a drill string. The drill string is removed. A first string of casing or conductor pipe is then run into the wellbore and set in the drilled out portion of the wellbore, and cement is circulated into the annulus behind the casing string. Next, the well is drilled to a second designated depth, and a second string of casing, or liner, is run into the drilled out portion of the wellbore. The second string is set at a depth such that the upper portion of the second string of casing overlaps the lower portion of the first string of casing. The second liner string is then fixed, or "hung" off of the existing casing by the use of slips which utilize slip members and cones to wedgingly fix the new string of liner in the wellbore. The second casing string is then cemented. This process is typically repeated with additional casing strings until the well has been drilled to total depth. In this manner, wells are typically formed with two or more strings of casing of an ever-decreasing diameter.

As an alternative to the conventional method, drilling with casing is a method sometimes used to place casing strings within the wellbore. This method involves attaching a cutting structure in the form of a drill bit to the same string of casing which will line the wellbore. Rather than running a drill bit on a smaller diameter drill string, the drill bit or drill shoe is run in at the end of the larger diameter of casing that will remain in the wellbore and be cemented therein. Drilling with casing is a desirable method of well completion because only one run-in of the working string into the wellbore is necessary to form and line the wellbore for each casing string.

Specifically, drilling with casing is typically accomplished by lowering and rotating a first casing string with a cutting structure attached thereto into a formation to form a portion of the wellbore at a first depth. During the lowering of the casing string, it is often necessary to circulate drilling fluid while drilling into the formation to form a path

within the formation through which the casing string may travel. The first casing string is cemented into the formation. Next, a second casing string with a drill bit attached thereto is lowered and rotated into the formation while circulating fluid to form a portion of the wellbore at a second depth. The second casing string is hung off of the first casing string and cemented into the formation. This process can be repeated with additional casing strings until the wellbore extends to the desired depth.

Because the second casing string must travel through the first string of casing to reach the formation below the first casing string, the second casing string must have a smaller inner diameter than the second casing string. Historically, therefore, as more casing strings were set in the wellbore, the casing strings became progressively smaller in diameter in order to fit within the previous casing string. The drill bit for drilling to the next predetermined depth must thus become progressively smaller as the diameter of each casing string decreases in order to fit within the previous casing string. Therefore, multiple drill bits of different sizes are ordinarily necessary for drilling in well completion operations. Progressively decreasing the diameter of the casing strings with increasing depth within the wellbore limits the size of wellbore tools which are capable of being run into the wellbore. Furthermore, restricting the inner diameter of the casing strings limits the volume of hydrocarbon production which may flow to the surface from the formation.

Recently, methods and apparatus for expanding the diameter of casing strings within a wellbore have become feasible. When using expandable casing strings to line a wellbore, the well is drilled to a first designated depth with a drill bit on a drill string, then the drill string is removed. A first string of casing is set in the drilled out portion of the wellbore, and cement is circulated into the annulus behind the casing string. Next, the well is drilled to a second designated depth, and a second string of casing is run into the drilled out portion of the wellbore at a depth such that the upper portion of the second string of casing overlaps the lower portion of the first string of casing. Cement can be placed behind the second casing string and then the second casing string is expanded into contact with the existing first string of casing with an expander tool. This process is typically repeated with additional casing strings until the well has been drilled to total depth.

An advantage gained with using expander tools to expand expandable casing strings is the decreased annular space between the overlapping casing strings. Because the subsequent casing string is expanded into contact with the previous string of casing, the decrease in diameter of the wellbore is essentially the thickness of the subsequent casing string. However, even when using expandable technology, casing strings must still become progressively smaller in diameter in order to fit within the previous casing string.

Currently, monobore wells are being investigated to further limit the decrease in the inner diameter of the wellbore with increasing depth. Monobore wells would theoretically result when the wellbore is approximately the same diameter along its length or depth through the expansion of casing strings, causing the path for fluid between the surface and the wellbore to remain consistent along the length of the wellbore and regardless of the depth of the well. In a monobore well, tools could be more easily run into the wellbore because the size of the tools which may travel through the wellbore would not be limited to the constricted inner diameter of casing strings of decreasing inner diameters.

Theoretically, in the formation of a monobore well, a first casing string could be inserted into the wellbore and cemented therein. Thereafter, a second casing string of a smaller diameter than the first casing string could be inserted into the wellbore and expanded to approximately the same inner diameter as the first casing string. The casing strings may be connected together through a conventional hanger, or by expanding the inner diameter of the larger diameter first casing string, which is located above the second casing string, where the first and second casing strings overlap. Additional casing strings would be inserted into the wellbore and expanded, as described in relation to the first and second casing strings, until the wellbore extends to the desired depth.

With monobore well investigation, certain problems present. One problem relates to the expansion of the smaller casing string into the larger casing string to form the connection therebetween. Current methods of expanding casing strings in a wellbore to create a connection between casing strings requires the application of a radial force to the interior of the smaller casing string and expanding its diameter out

until the larger casing string is itself pushed past its elastic limits. The result is a connection having an outer diameter greater than the original outer diameter of the larger casing string. While the increase in the outer diameter is small in comparison to the overall diameter, there are instances where expanding the diameter of the larger casing string is difficult or impossible. For example, in the completion of a monobore well, the upper casing string may be cemented into place before the next casing string is lowered into the well and its diameter expanded. Because the annular area between the outside of the larger casing string and the borehole therearound is filled with cured cement, the diameter of the larger casing string cannot expand past its original shape. Expansion of the required magnitude may also rupture the casing.

When hanging a casing string from another casing string, whether during a drilling operation or a drilling with casing operation, the casing string being hung may be set mechanically or hydraulically. A typical apparatus for setting a casing string in a well casing includes a liner hanger and a running tool. The running tool is provided with a valve seat obstruction which will allow fluid pressure to be developed to actuate the slips in order to set the liner hanger in the well casing. Once the liner hanger has been set, the running tool is rotated counterclockwise to unscrew the running tool from the liner hanger and the running tool is then removed.

One advantageous use for expandable tubulars is to hang one tubular within another. For example, the upper portion of a casing string can be expanded into contact with the inner wall of a casing in a wellbore. In this manner, the bulky and space-demanding slip assemblies and associated running tools can be eliminated. One problem with using expandable tubular technology used casing strings relates to cementing the casing strings within the wellbore. Cementing is performed by circulating uncured cement down the wellbore and back up an annulus between the exterior of the casing string being set and the wellbore therearound. In order for the cement to be circulated, a fluid path is necessary between the annulus and the wellbore. Hanging a casing string in a wellbore by circumferentially expanding its walls into the well casing obstructs the juncture and prevents circulation of fluids. To avoid this circulation problem, casing strings must usually be temporarily hung in a wellbore prior to cementing.

Therefore, a need exists for a method and apparatus for forming a substantially monobore well when drilling with casing. There is a further need for an apparatus and method for use when drilling with casing for forming a cased wellbore with an inner diameter which does not decrease with increasing depth within the wellbore. There is a yet further need for an apparatus and method for use in drilling with casing which involves running a casing string of smaller inner diameter into a formation and subsequently expanding a casing string of larger inner diameter to form a wellbore with substantially the same inner diameter along its length.

Moreover, there is a need for apparatus and methods that permit casing to be hung in a well and also leave a fluid path around the casing, at least temporarily. Additionally, there is a need for casing having a means for circulating fluids therearound even after the casing has been hung within the wellbore or previously installed casing.

SUMMARY OF THE INVENTION

Embodiments of the present invention generally relate to methods and apparatus for forming a substantially monobore well which does not decrease in diameter with increasing depth or length within the formation. Embodiments of the present invention further generally provide full bore lined lateral wellbores, and methods of making the same.

For one embodiment, a method of forming a full bore lined lateral wellbore is provided. The method generally includes forming a lateral wellbore extending from a main wellbore, wherein a diameter of the lateral wellbore is larger than an inner diameter of casing lining the main wellbore, running an expandable tubular element through the casing lining the main wellbore into the lateral wellbore, and expanding the tubular element within the lateral wellbore. The expanded tubular element may have an outer diameter larger than the drift diameter of the main wellbore lining. For some embodiments, the expanded tubular may have an inner diameter greater than the inner diameter of the main wellbore casing, providing a full-bore lined lateral. For some embodiments, the lateral wellbore may be formed and the expandable tubular element may be run concurrently in a single pass through the main wellbore, utilizing a drilling with lining operation.

For one embodiment, another method of forming a full bore lined lateral wellbore is provided. The method generally includes securing a diverter within a main wellbore lined with casing, forming a lateral wellbore with a drill bit guided by the diverter, expanding a diameter of at least a portion of the lateral wellbore, running an expandable tubular element, through the casing lining the main wellbore, into the lateral wellbore, and expanding the tubular element within the lateral wellbore, such that the expanded tubular element has an outer diameter larger than the inner diameter of the casing lining the main wellbore.

For one embodiment, a lateral wellbore extending from a main wellbore lined with casing is provided. At least a portion of the lateral wellbore is lined with casing, the casing having an outer diameter larger than the drift diameter of the main wellbore casing. For some embodiments, the lined portion of the lateral wellbore may extend to the main wellbore.

The present invention generally provides an apparatus and method for forming a cased wellbore which does not decrease in inner diameter with increasing depth while drilling with casing. More specifically, the present invention provides an apparatus and method for forming a cased wellbore of substantially the same inner diameter with increasing depth while drilling with casing. In one aspect, the apparatus includes a casing string, an earth removal member or cutting structure operatively attached to a lower end of the casing string, and a compressible member disposed at a lower end of the casing string. In another aspect, the apparatus includes a casing string with an enlarged inner diameter at its lower end, an earth removal member or cutting structure operatively attached to a lower end of the casing string, and a drillable portion disposed within the casing string.

In one aspect, the method includes drilling a wellbore using a first casing string with an earth removal member or cutting structure operatively disposed at its lower end, locating the first casing string within the wellbore, locating a portion of a second casing string adjacent to a portion of the first casing string with an enlarged inner diameter, and expanding the portion of the second casing string so that the portion of the second casing string has an inner diameter at least as large as a smallest inner diameter portion of the first casing string. In another aspect, the method includes drilling a

wellbore using a first casing string with a cutting structure operatively disposed at its lower end and a compressible member disposed around the first casing string, locating the first casing string within the wellbore, locating a portion of a second casing string adjacent to the compressible member, and expanding the portion of the second casing string so that the portion of the second casing string has an inner diameter at least as large as a smallest inner diameter portion of the first casing string.

Providing a method and apparatus for drilling with casing to form a substantially monobore well increases the possible inner diameter of a cased wellbore formed by drilling with casing. As a consequence, flexibility in the tools which are capable of being run into the cased wellbore is increased. Furthermore, forming a substantially monobore well using drilling with casing technology allows a wellbore of substantially the same inner diameter along its length to be formed in less time compared to conventional drilling methods.

In one aspect, embodiments of the present invention generally provide a method of forming a cased well, comprising lowering a first casing having an earth removal member operatively attached to its lower end into a formation to form a wellbore of a first depth, expanding at least a portion of the first casing into gripping engagement with the wellbore to hang the first casing within the wellbore, leaving a fluid path between the first casing and the wellbore after expanding at least the portion of the first casing, flowing a fluid through the fluid path, and closing the fluid path. In another aspect, embodiments of the present invention provide a method of casing a wellbore, comprising lowering a first casing having an earth removal member operatively attached to its lower end into a formation to form a wellbore, the first casing having at least one bypass for circulating a fluid formed therein, expanding at least a portion of the first casing into frictional engagement with the wellbore to hang the first casing within the wellbore, circulating the fluid through the at least one bypass, and expanding the first casing to close the bypass.

In yet another aspect, embodiments of the present invention include an apparatus for use in drilling with casing, comprising a tubular string having a casing portion, an earth removal member operatively attached to its lower end, and at least one fluid bypass area located thereon, and an expansion tool disposed within the

tubular string, the expansion tool capable of expanding a portion of the tubular string into a surrounding wellbore while leaving a flow path around an outer diameter of the tubular string to a surface of the wellbore.

BRIEF DESCRIPTION OF THE DRAWINGS

So that the manner in which the above recited features of the present invention, and other features contemplated and claimed herein, are attained and can be understood in detail, a more particular description of the invention, briefly summarized above, may be had by reference to the embodiments thereof which are illustrated in the appended drawings. It is to be noted, however, that the appended drawings illustrate only typical embodiments of this invention and are therefore not to be considered limiting of its scope, for the invention may admit to other equally effective embodiments.

Figure 1 is a flow diagram of exemplary operations in accordance with aspects of the present invention.

Figures 2A-2G show a lateral wellbore at various stages of formation, according to one embodiment of the present invention.

Figures 3A-3C show a lateral wellbore at various stages of formation, according to another embodiment of the present invention.

Figures 4A-4F show a lateral wellbore at various stages of formation, according to yet another embodiment of the present invention.

Figures 5A-5D show a lateral wellbore formed by drilling with liner at various stages of formation, according to another embodiment of the present invention.

Figure 6 is a sectional view of an embodiment of a first casing string having an earth removal member attached thereto lowered into the formation to a first depth and set within the formation. A lower portion of the first casing string has a larger inner diameter than an upper portion of the first casing string.

Figure 7 shows the first casing string of Figure 6 where a second casing string having an expandable cutting structure attached thereto is lowered through an inner

diameter of the first casing string. The expandable cutting structure is in the retracted, closed position.

Figure 8 shows the first casing string of Figure 6, where the second casing string has drilled through the first casing string and the earth removal member attached to the first casing string. The expandable cutting structure is shown expanded into the open position to drill the second casing string to a second depth within the formation.

Figure 9 shows the first casing string of Figure 6, where the second casing string is drilled into the formation to the second depth and is being radially expanded into contact with the inner diameter of the first casing string.

Figure 10 shows the first casing string of Figure 6, where the second casing string is expanded into contact with the inner diameter of the first casing string. The second casing string is set within the formation to form a substantially monobore well.

Figure 11 is a sectional view of an alternate embodiment of a first casing string having an earth removal member attached thereto lowered into the formation to a first depth and set within the formation. An attenuator is attached to a lower portion of an outer diameter of the first casing string.

Figure 12 shows the first casing string of Figure 11 being drilled through by a second casing string having an expandable cutting structure attached thereto. The expandable cutting structure is in the retracted, closed position.

Figure 13 shows the first casing string of Figure 11, where the second casing string has drilled through the first casing string and the earth removal member attached to the first casing string. The expandable cutting structure is in the expanded, open position to drill into the formation to a second depth.

Figure 14 shows the second casing string being expanded into the first casing string of Figure 11 to form a substantially monobore well. The attenuator is compressed by the force exerted during the expansion process.

Figure 14A is a section view of the attenuator shown in Figure 14 in the compressed position after expansion.

Figure 15 is a section view of casing having an earth removal member attached thereto lowering into a formation. At least a portion of the casing is profiled. A running string having a setting tool and an expander tool is disposed within the casing.

Figure 15A is a top view of Figure 15 taken along line 15A-15A.

Figure 15B is a perspective view of an embodiment of the profiled casing of the present invention.

Figure 15C is an exploded view of an expander tool.

Figure 15D is an exploded view of a setting tool.

Figure 16 is a section view of the embodiment shown in Figure 15, showing the profiled casing hung within the wellbore with the setting tool.

Figure 16A is a top view of Figure 16 taken along line 16A-16A.

Figure 17 is a section view of the embodiment shown in Figure 15, showing the bypass area for fluid flow.

Figure 18 is a section view of the embodiment shown in Figure 15, showing the earth removal member and the running string drilling below the profiled casing.

Figure 19 is a section view of the embodiment shown in Figure 15, showing the casing partially expanded into the wellbore.

Figure 20 is a section view of the embodiment shown in Figure 15, showing a lower portion of the casing expanded into the wellbore. The profiled portion of an upper portion of the casing is expanded and the running string is removed.

Figure 20A is a top view of Figure 20 taken along line 20A-20A.

Figure 21 is a section view of an embodiment of casing of the present invention having an earth removal member attached thereto lowering into a formation. A running string having therein an expander tool is disposed within the casing.

Figure 22 is a section view of the embodiment shown in Figure 21, showing the casing hung within the wellbore with the expander tool.

Figure 23 is a section view of the embodiment shown in Figure 21, showing a lower portion of the casing expanded into the wellbore.

Figure 24 is a section view of the embodiment shown in Figure 21, showing a physically alterable bonding material flowing outside the casing.

Figure 25 is a section view of the embodiment shown in Figure 21, showing the casing expanded into the wellbore and the running string removed.

DETAILED DESCRIPTION OF THE PREFERRED EMBODIMENT

Embodiments of the present invention generally provide methods and apparatus for forming a lined wellbore which does not decrease in diameter with increasing depth or length within the formation. The wellbore may include only a main wellbore or may include the main wellbore and any number of lateral wellbores extending therefrom. In some embodiments, drilling with casing is utilized to form a substantially monobore well lined with the casing.

In one aspect, embodiments of the present invention provide improved lateral wellbores and apparatus and methods for forming the same. The lateral wellbores extend from a main wellbore and are at least partially lined with casing having an outer diameter larger than the drift diameter of casing used to line the main wellbore (at least the casing used to line the main wellbore above the lateral). For some embodiments, the inner diameter of the lateral wellbore casing may be larger than the inner diameter of the main wellbore casing. Such lateral wellbores may be referred to as full bore lined lateral wellbores. In either case, by providing a larger inner diameter than conventional lateral wellbores, a larger variety of tools may be run in the lateral wellbore.

Figure 1 is a flow diagram of exemplary operations 100 for constructing a lateral wellbore in accordance with aspects of the present invention. Figures 2A-2G illustrate a lateral wellbore, as well as the main wellbore from which it extends, at various stages of formation in accordance with the operations 100. Thus, the operations 100 may be best described with reference to Figures 2A-2G. However, the lateral wellbore illustrated in Figures 2A-2G is exemplary of just one embodiment of a lateral wellbore that may be constructed according to the operations 100 and, as will be described in

greater detail below, various other lateral wellbores may also be constructed in accordance with the operations 100.

The operations 100 begin, at step 102, by forming a main wellbore lined with casing. For example, as illustrated in Figure 2A, a main wellbore 202 lined with casing 204 may be formed in a formation 206. The main wellbore 202 may be formed using any suitable means. For some embodiments, the main wellbore 202 may be formed as a single diameter "monobore" and/or the casing 204 may be formed from expandable tubular elements, such as those available from Weatherford International, Inc. The expandable tubular elements (or "tubulars") may be screened or made of a solid material. Advantages of forming the main wellbore 202 as a monobore include reduced production time because the main wellbore 202 may have a single diameter, reducing the number of bits required to drill the main wellbore 202.

Advantages of forming the casing from expandable tubulars include an increase in the achievable inner diameter throughout the length of the main wellbore. In other words, conventional casing techniques require the use of sequential casing strings of increasingly smaller diameters, because each successive casing string must be run through the previous casing string. However, expandable tubulars may be run downhole in an unexpanded state having a sufficiently small outer diameter to pass through the inner diameter of previously expanded tubulars. Accordingly, casing formed of expandable tubulars need not suffer the successively smaller diameters associated with conventional casing, and may provide full bore access to the main wellbore, thereby potentially allowing a greater variety of downhole tools to be run in the main wellbore 202.

At step 104, a lateral wellbore extending from the main wellbore is formed, wherein the diameter of the lateral wellbore is larger than the inner diameter of the main wellbore casing 204. As illustrated in Figure 2B, in order to form the lateral wellbore 214, a section of the casing 204 may be removed to expose a portion of the formation 206. Depending on the technique used to remove the section of the casing, an entire annular section of the casing 204 may be removed, or only a portion of the casing 204. Alternately, the casing 204 may be cut along an entire perimeter and an upper section (above the cut) of the casing 204 may be raised to expose a portion of the formation

206. Further, depending on the removal process, a portion of physically alterable bonding material, preferably cement, used set the casing 204 within the wellbore 202 may be exposed instead of, or in addition to the formation 206. Regardless, a diameter of the main wellbore 202 may be enlarged where the section of casing has been removed, for example, using a conventional underreamer 210, to form a cavity 208 having a larger diameter than surrounding sections of the wellbore 202.

As illustrated in Figure 2C, in preparation for drilling the lateral wellbore, the cavity 208 may be filled with a physically alterable bonding material such as cement 212. A lateral wellbore 214 may then be formed by drilling through the cement 212, as illustrated in Figure 20. For example, drill deviation achievable by drilling through cement 212 is well known and may be adequately controlled to form the lateral wellbore 214 having a desired trajectory.

In order to be run through the casing 204, an earth removal member, preferably a drill bit (not shown), used to drill through the cement 212 must have an outer diameter less than the inner diameter of the casing 204. Accordingly, the lateral wellbore 214 drilled with the drill bit may initially have a diameter smaller than the inner diameter of the casing 204 and must, therefore, be expanded. As illustrated, the lateral wellbore 214 may be expanded using an expandable bit 218, underreamer, back reamer, or similar apparatus. An example of an expandable bit is disclosed in International Publication Number WO *01/81708* A1. Similar to a conventional under-reamer, the expandable bit may include a set of blades that move between an open, extended position and a closed, retracted position. Generally, movement of the blades between the open and the closed position may be controlled through the use of hydraulic fluid flowing through the center of the expandable bit. For example, increasing the hydraulic pressure i.e., by increasing the flow) may move the blades to the open position, while decreasing the hydraulic pressure may return the blades to the closed position.

Therefore, the blades may be placed in a closed (retracted) position giving the expandable bit 218 a smaller diameter than the inner diameter of the casing 204, allowing the expandable bit 218 to be run in the lateral wellbore 214. The blades may then be opened giving the expandable bit 218 a larger diameter, allowing at least a

portion of the lateral wellbore 214 to be expanded to have a greater diameter than the inner diameter of the casing 204. After expanding the portion 216 of the lateral wellbore 214, the blades may be returned to the closed position and the expandable bit 218 may be removed through the lateral wellbore 214 and the casing 204 of the main wellbore 202. Cutting members disposed on the arms of the expandable bit 218 may be made of any suitable hard material, such as tungsten carbide or polycrystalline diamond ("PCO").

At step 106, an expandable tubular lining is run into the lateral wellbore 214. At step 108, the tubular lining is expanded to have an inner diameter equal to or larger than the inner diameter of the main wellbore casing 204. For example, as illustrated in Figure 2E, an expandable tubular 220 having an outer diameter 02 smaller than the inner diameter 01 of the casing 204 may be run into the expanded portion 216 of the lateral wellbore 214. The expandable tubular 220 may then be expanded, for example, using an expander tool 222. The expandable tubular 220 may comprise any number of any type of suitable expandable tubular elements, which may be solid or screened, and may be of any suitable length. The expander tool 222 may be any suitable expanding tool, such as a fixed-cone type or rotary-type expander tool. Expandable tubulars usable in the present invention and methods of installing the same are described in greater detail in the commonly owned U.S. Patent Number 6,752,215, entitled "Method and Apparatus for Expanding and Separating Tubulars in a Wellbore".

Recalling that the term "drift diameter" generally refers to the inside diameter that the casing manufacturer guarantees per specifications, the specified drift diameter of the main wellbore casing 204 is typically at least slightly smaller than the actual inner diameter 01 to allow for manufacturing tolerances. As previously described, to ensure that the casing elements could be run through the main wellbore casing 204, the outer diameter of casing used to line conventional lateral wellbores was smaller than the drift diameter of the main wellbore casing 204. In contrast, once expanded, the tubular 220 may have an outer diameter greater than the drift diameter of the main wellbore casing 204. Of course, this larger outer diameter also results in a larger inner diameter (assuming like casing thicknesses). For some embodiments, as illustrated in Figure 2F, the tubular 220 may be expanded such that the inner diameter (03) of the tubular

220 is equal to or larger than the inner diameter (D1) of the main wellbore casing 204, thus providing a full-bore lined lateral.

As an example, a typical 9-5/8-in. casing may have an 8.53-in. drift diameter. Accordingly, the lateral wellbore 214 may be initially formed by drilling through the cement 212 with an 8.50-in. diameter bit. Prior to running the expandable tubular 220, the lateral wellbore 214 may be expanded to have a diameter sufficiently large (e.g., approximately 9.63 in.) to allow the tubular 220 to expand to have an inner diameter greater than 8.53 in. Of course, actual dimensions will vary depending on the particular application.

Regardless of the actual dimensions, in contrast to conventional lateral wellbores lined with casing having a smaller inner diameter than the main wellbore lined within casing, the larger inner diameter of the lateral wellbore 214 may provide full bore access for the running of tools for various operations. For some applications, it may be desirable to leave the lateral wellbore 214 isolated from sections of the main wellbore 202 below a junction between the lateral wellbore 214 and the main wellbore 202 (the "lateral junction"). Alternatively, as illustrated in Figure 2G, if desired, fluid communication between the lateral wellbore 214 and sections of the main wellbore 202 below the lateral junction may be readily established by drilling through the cement 212, for example, with an earth removal member such as a bit 224.

Figures 3A-3C show another example of a full bore lined lateral wellbore 214, at various stages of formation that may also be constructed according to the operations 100 of Figure 1. As illustrated in Figure 3A, the lateral wellbore 214 may be formed (e.g., at step 104) using a diverter 226, for example a whipstock or deflector, rather than the cement 212 used to form the lateral wellbore 214 of Figures 2D-2G. Prior to drilling the lateral wellbore 214, a section or "window" of the casing 204 may be removed, for example using a milling apparatus such as that described in the commonly owned U.S. Patent No. 6,105,675, entitled "Downhole Window Milling Apparatus and Method for Using the Same," which is herein incorporated by reference in its entirety. The diverter 226 may be run through the casing 204 and secured (anchored) within the main wellbore 202 at a position corresponding to the desired location of the lateral wellbore 214. In the alternative, the diverter 226 may be run into

the main wellbore 202 with the casing 204. In a subsequent drilling operation, the diverter 226 may serve to guide (i.e., divert) an earth removal member such as a drill bit (not shown) through the removed section of the casing 204 in the desired trajectory.

As previously described with reference to Figure 2D, the diameter of the lateral wellbore 214 may initially be smaller than the inner diameter of the casing 204 and may be expanded with an expandable bit 218, underreamer, back reamer, or similar apparatus. As illustrated in Figure 3B, once the lateral wellbore 214 is expanded, an expandable tubular 220 may be run into the lateral wellbore 214 and expanded using an expander tool 222. As illustrated in Figure 3C, after expanding the tubular 220 to have an inner diameter equal to or larger than the inner diameter of the main wellbore casing 204, the diverter 226 may be removed to establish communication between the lateral wellbore 214 and sections of the main wellbore 202 below the lateral junction, may be left within the main wellbore 202, or may be left within the main wellbore 202 and subsequently drilled through to reestablish communication with the main wellbore 202.

Decisions regarding how to form a lateral wellbore (e.g., using cement or a diverter) may be made based on application considerations. For example, forming the lateral wellbore 214 using the cementing technique illustrated in Figures 2A-2G may be preferred if the portion of the main wellbore 202 below the lateral junction is to be isolated. However, the trajectory (e.g., azimuth and inclination) of the lateral wellbore 214 may be better controlled using a diverter 226 rather than using cement 212. Further, as illustrated in Figure 3C, by controlling the azimuth of the trajectory, only a minimal portion (window) of the casing 204 through which the lateral wellbore 214 will be formed needs to be removed, allowing a majority of the annular portion of the casing 204 surrounding the lateral junction to remain intact, thus providing a potentially stronger wellbore structure.

As illustrated in Figure 3C, however, portions 229 of the lateral wellbore 214 may still remain unlined. In some applications, to maximize support of the wellbore structure, it may be desirable to form a fully lined lateral wellbore, where an entire portion of the lateral wellbore 214 extending to the main wellbore 202 is lined. As illustrated in Figures 4A-4F, a fully lined lateral wellbore 214 may be constructed by

modifying the operations described above with reference to constructing the lateral wellbore 214 of Figures 3A-3C. For example, as illustrated in Figure 4A, the lateral wellbore 214 may still be formed by drilling with an earth removal member, preferably a bit 224, guided by the diverter 226.

However, as illustrated in Figure 4B, prior to enlarging the diameter of the lateral wellbore 214, the diverter 226 may be removed. As shown in Figure 4C, with the diverter 226 removed, the entire length of the lateral wellbore 214 may be enlarged, for example using a back reamer 230 or similar apparatus. An example of an expandable back reamer usable in embodiments of the present invention is described in detail in the commonly assigned, U.S. Patent Number 6,851,491filed on September 27, 2002, entitled "Internal Pressure Indication and Locking Mechanism for a Downhole Tool". The back reamer 230 may be run within the lateral wellbore 214 to a controlled depth and operated to expand at least a portion of the lateral wellbore 214 from the controlled depth to the lateral junction.

Subsequently, as illustrated in Figure 40, an expandable tubular 220 may be run into the lateral wellbore 214 with a portion 232 extending into the main wellbore 202. The tubular 220 may then be expanded using the expander tool 222 to fully line the lateral wellbore 214 up to the main wellbore 202. The portion 232 of the tubular 220 extending into the main wellbore 202 may subsequently be removed using any suitable technique (e.g., drilling, milling, etc.) to leave the fully lined lateral junction illustrated in Figure 4F.

Referring again to Figure 1, it should be noted that, while the operations 100 are shown as sequential steps, they do not have to be performed sequentially. As an example, for some embodiments, the operations 104 and 106 may be performed concurrently utilizing a "drilling with liner" or "drilling with casing" technique illustrated in Figures 5A-D (e.g., with the expandable bit 218 of Figures 20 and 3A or expandable back-reamer 230 of Figure 4C). Forming the lateral by drilling with casing may reduce time and associated production costs.

Figure 5A illustrates one embodiment of a system for drilling with liner including a bottomhole assembly ("BHA") 240 secured to the bottom of an expandable tubular

element 220 with a latch 242. For some embodiments, the tubular element 220 may be rotated from the surface of the wellbore 202 to rotate an expandable bit 218 disposed on a bottom of the BHA 240. For other embodiments, the expandable bit 218 may be driven by a drill motor (not shown) included with the BHA 240. For other embodiments, no rotation is necessary to form the deviated lateral wellbore 214, but mere jetting of drilling fluid through the earth removal member 218 and lowering of the tubular element 220 forms the lateral wellbore 214. Any combination of the above drilling methods is also contemplated for use in the present invention. In any case, the lateral wellbore 214 may be formed by deviating from the main wellbore 202 using any of the previously discussed techniques, such as use of a whipstock or drilling through cement 212 (as shown in Figures 5A-D). The expandable bit 218 may be placed in a retracted position (shown in Figure 5B) to run in through the main wellbore casing 202 and expanded after reaching the cement 212, or at some location thereafter, to drill the enlarged lateral wellbore 214.

As illustrated in Figures 5A-B, to enhance drilling the enlarged lateral wellbore 214, the BHA 240 may include an expandable stabilizer 244 having one or more expandable members 245. The expandable members 245 may be placed in a retracted position (shown in Figure 5B) to run in through the main wellbore casing 204 and in an expanded position to engage an inner surface of the lateral wellbore 214 while drilling. As illustrated in Figures 5A-B, the BHA 240 may also include one or more logging-while-drilling ("LWD") or measurement-while-drilling ("MWD") tools 246, each having one or more sensors to measure one or more downhole parameters, such as conditions in the wellbore (e.g., pressure, temperature, wellbore trajectory, etc.), geophysical parameters (e.g., resistivity, porosity, sonic velocity, gamma ray, etc.), and/or MWD tools that measure formation parameters (e.g., resistivity, porosity, sonic velocity, gamma ray). The tool 246 may have any suitable combination of circuitry to log measured parameters for later retrieval and/or communicate (telemeter) the measured parameters to the surface of the wellbore 202. In either case, taking these measurements while drilling may eliminate an additional pass with similar tools subsequent to drilling.

Once the enlarged lateral wellbore 214 is formed, the expandable tubular element 220 may be expanded, as previously described. Prior to or after the

expanding, one or more components of the BHA 240 may be retrieved from the lateral wellbore 214. For example, the BHA 240 may be detached from the tubular element 220 by unlatching the latch 242, the one or more expandable members 245 of the expandable stabilizer 244 may be retracted, and the expandable bit 218 may be retracted to retrieve the entire BHA 240. As an alternative, any or all of the components of the BHA 240 may be left in the lateral wellbore 214, for example if the costs associated with retrieval outweigh the costs of the equipment.

Figure 5C illustrates another embodiment of a system for drilling with lining comprising an earth removal member, preferably a drilling member 250, operatively connected to a lower portion of an expandable tubular element 220. The drilling member 250 may be an expandable drill bit, such as the expandable drill bit 218 of Figure 5A, allowing for run-in through the main wellbore casing 204. For some embodiments, in addition to being expandable, the drilling member 250 may also be "drillable," allowing for future expansion of the lateral wellbore 214. For example, at least a portion of the drilling member 250 may be made of a relatively soft alloy and the cutting members may be designed to not damage a subsequent drilling member run in the hole to drill through the drilling member 250. For example, relatively hard cutting members may be designed to break off and be removed with rock formation and other particles in the drilling fluid. In either case, as previously described, the tubular element 220 may be rotated from the surface to rotate the drilling member 250 (e.g., via a drill pipe 264), rotated by a downhole mud motor, jetted into the formation, or any combination thereof.

As illustrated in Figure 5C, a cement tool 260 and one or more cement plugs 262 may be run in with the expandable element 220, allowing the expandable element 220 to be set in place (preferably cemented) within the lateral wellbore 214 by a physically alterable bonding material such as cement 212 flowed into an annulus between the outer diameter of the expandable element 220 and the formation 206, as shown in Figure 5D. For different embodiments, the expandable element 220 may be expanded before or after flowing the cement 212 downhole. Of course, if the cement 212 is flowed before expanding, the expanding operations should take place prior to the cement setting. Otherwise, the cement 212 may prevent expansion of the tubular

element 220 and/or expansion of the tubular element 220 may jeopardize the integrity of the cement 212.

Because of this risk, it may be desirable to have the option of cementing after expansion. For some embodiments, this option may be provided by forming the lateral wellbore 214 with a sufficiently large diameter. In other words, the diameter of the lateral wellbore 214 may be designed to accommodate cement 212 flowing freely to surround the tubular 220 even after expansion. Therefore, the expanding and cementing operations may be performed independently, and the risk of the cement setting prior to completion of the expansion operation may be eliminated.

Through the use of expandable tubulars, embodiments of the present invention provide lined lateral wellbores having an outer diameter greater than the drift diameter of casing lining the main wellbore from which they extend. For some embodiments, the inner diameter of the lateral wellbore casing may be equal to or larger than the inner diameter of the main wellbore casing, thus providing a full-bore lined lateral. Accordingly, downhole tools designed to be run through the main wellbore casing may also be run through the lateral wellbore casing, thus providing greater flexibility in operations performed within the lateral wellbore.

In another embodiment, a substantially monobore well, or at least a cased wellbore which does not increase in diameter with increasing depth or length of the wellbore, is formed in a formation regardless of whether a lateral wellbore is formed. A first casing string and a second casing string may comprise a section of casing or two or more sections of casing connected (preferably threadedly connected) to one another. In one aspect, the first casing string has an enlarged inner diameter into which a second casing string is expanded into so that the inner diameter of the second casing string is at least as large as the inner diameter of the first casing string. In another aspect, a first casing string includes at least one compressible member which may be compressed when a second casing string is expanded into the first casing string, thereby forming a wellbore where the inner diameter of the second casing string is at least as large as the inner diameter of the first casing string.

Figure 6 shows an apparatus 300 of the present invention for use in drilling with casing to form a substantially monobore well, or at least a cased wellbore that does not

decrease in diameter with increased depth. A first casing string 310 has a cutting structure 315 attached to its lower end for drilling through a formation 320 to form a wellbore 305. The cutting structure 315 includes any earth removal member. The cutting structure 315 is preferably a drill bit constructed of a drillable material 312 such as aluminum. The cutting structure 315 preferably includes small, substantially spherical cutting members 313, preferably constructed of tungsten carbide or polycrystalline diamond, disposed around the drillable material 312 for use in drilling into the formation 320. The cutting structure 315 has at least one perforation (nozzle) 316 extending therethrough to allow drilling fluid to circulate within the formation 320. The first casing string 310 includes casing sections 310A, 310B, and 310C connected, preferably threadedly connected, to one another. Any number of casing sections may be threadedly connected to one another to form the first casing string 310, or the first casing string 310 may only include one casing section.

A lower portion of an inner diameter of the first casing string 310 has a cut-away portion 325 therein. The cut-away portion 325 of the first casing string 310 has a larger inner diameter than the remaining portion of the first casing string 310 disposed above the cut-away portion 325, so that the cut-away portion 325 is an undercut portion of the first casing string 310. The cut-away portion 325 provides a mating surface for an upper portion of a second casing string 810 (shown in Figure 7) when the upper portion of the second casing string 810 is expanded into the first casing string 310. The mating surface of the cut-away portion 325 is preferably non-expanding.

Disposed within the inner diameter of the first casing string 310 is a drillable cementing assembly 330 which facilitates the function of cementing an annular space 335 between the outer diameter of the first casing string 310 and the inner diameter of the wellbore 305. The cementing assembly 330, preferably a cement shoe assembly, comprises a longitudinal bore 323 running therethrough, providing a fluid flow path for cement and well fluids. A one-way valve, for example a check valve 350, is located within the longitudinal bore 323. The check valve 350 permits fluid entrance from the well surface through the check valve 350 and into the longitudinal bore 323, yet prevents fluid from passing from the wellbore 305 into a portion of the first casing string 310 above the check valve 350. A spring 351, as shown in Figure 6, may be used to bias the check valve 350 in a closed position. Any other mechanism which permits

one-way fluid flow through the longitudinal bore 323 may be utilized with the present invention.

An annular area 321 adjacent to the check valve 350 and between the inner diameter of the first casing string 310 and the longitudinal bore 323 is filled with a drillable material, preferably cement, to stabilize the longitudinal bore 323. One or more upsets 352 (preferably a plurality of upsets 352) are disposed in the first casing string 310 to hold the cement in place and prevent axial movement thereof. Lining the longitudinal bore 323 between the check valve 350 and a lower end of the first casing string 310 is a tubular member 331. An annular area 332 between the tubular member 331 and the first casing string 310 is filled with an aggregate material such as sand. The purpose of the aggregate material is to support the tubular member 331.

Below the annular area 332 filled with aggregate material is a drillable portion 340. The drillable portion 340 is connected, preferably threadedly connected, to a lower end of the first casing string 310 so that a longitudinal bore 333 running through the drillable portion 340 is in line with the longitudinal bore 323. The drillable portion 340 is constructed of drillable material to support the aggregate material in the annular space 332 and has wear-resistant characteristics so that the material is not affected by hydraulic pressure characteristic of the wellbore 305 conditions. Preferably, the drillable portion 340 is formed of a solid material, and even more preferably, with a composite material such as fiberglass.

One or more grooves (not shown) may be disposed on an outer portion of the drillable material 340 around the perimeter of the drillable material 340 where the drillable material 340 meets the first casing string 310. The groove ensures that the drillable portion 340 falls away from the first casing string 310 as the second casing string 810 drills through the first casing string 310, as described below. Disposed in an upper portion of the drillable material 340 are one or more radially extending voids (not shown) formed in the composite material which extend from the first casing string 310 inward to terminate adjacent to the tubular member 331. The voids in the composite material ensure that the outermost portions of the drillable material 340 fall away from the first casing string 310 as the second casing string 810 drills through the first casing string 310.

Figure 7 depicts the second casing string 810 drilling through the first casing string 310. The second casing string 810 has an expandable earth removal member, preferably an expandable cutting structure 805, operatively connected to its lower end. The expandable cutting structure 805 is extendable and retractable between a closed, retracted position shown in Figure 7 and an open, expanded position, as shown in Figure 8 (also described above in relation to Figures 1-5). The expandable cutting structure 805 is in the closed position while drilling through the cementing assembly 330 within the first casing string 310 because the expandable cutting structure 805 is too large in diameter to travel through the first casing string 310 while in the open position. The expandable cutting structure 805 is manipulated into the open position to drill into the formation 320 to a second depth at which to set the second casing string 810 at the end of the operation, as shown in Figures 8-10. In the closed position, the expandable cutting structure 805 is smaller in diameter than in the open position.

An example of an expandable cutting structure 805 in the form of an expandable drill bit is disclosed in U.S. Patent Number 6,953,096 filed on December 31, 2002. The expandable cutting structure 805 generally includes a set of blades 806, 807 which move between the open and closed position. Hydraulic fluid flowing through the expandable cutting structure 805 controls the movement of the blades 806, 807 between the open and closed position.

The expandable cutting structure 805 is preferably an expandable drill bit. A plurality of cutting members 808 is disposed on an outer portion of the blades 806, 807. The cutting members 808 are typically small and substantially spherical and may be made of tungsten carbide or polycrystalline diamond surfaces. The blades 806, 807 are constructed and arranged to permit the cutting members 808 to contact and drill into the earth when the blades 806, 807 are expanded outward and not ream the wellbore 305 or surrounding casing string 310 when the blades 806, 807 are collapsed inward.

Generally, one or more nozzles 385 of the expandable cutting structure 805 are in fluid communication with a longitudinal bore through the second casing string 810. The nozzles 385 allow jetting of the drilling fluid during the drilling operation through the

first casing string 310 to remove any cutting build-up which may gather in front of the blades 806, 807. The nozzles 385 also permit jetting of the drilling fluid during the drilling operation through the formation 320 below the first casing string 310 to form a path for the second casing string 810 through the formation 320. Furthermore, the nozzles 385 are used to create a hydraulic pressure differential within the bore through the second casing string 810 to cause the blades 806, 807 of the expandable cutting structure 805 to expand outward, as described in U.S. Patent Number 6,953,096.

Figure 9 illustrates the second casing string 810 being expanded into the first casing string 310 by an expander tool 400. Any expander tool may be used with the present invention which is capable of expanding the second casing string 810 by elastic or plastic deformation radially outward, preferably into contact with the first casing string 310, including a mechanical expander such as an expander cone. The expander tool 400 depicted in Figure 9 is used to expand the second casing string 810 from the lower end of the second casing string 810 upward with pressurized fluid supplied through a working string 406. In the alternative, the expander tool 400 may be used to expand the second casing string 810 from the top down. The expander tool 400 includes a body 402 which is hollow and generally tubular with a connector 404 for connection to the working string 406. The body 402 includes one or more recesses 414 to hold a respective roller 416. Each of the mutually identical rollers 416 is near-cylindrical and slightly barreled. Each of the rollers 416 is mounted by means of a bearing (not shown) at each end of the respective roller for rotation about a respective rotation axis which is parallel to the longitudinal axis of the expander tool 400 and radially offset therefrom. The inner end of a piston (not shown) is exposed to the pressure of fluid within the hollow core of the expander tool 400, and the pistons serve to actuate or urge the rollers 416 against the inner diameter of the second casing string 810 therearound.

In Figure 9, the expander tool 400 is shown in an actuated position and is expanding the diameter of the second casing string 810 radially outward, preferably into the inner diameter of the wellbore 305 and into the cut-away portion 325 of the first casing string 310. Typically, the expander tool 400 rotates as the rollers 416 are actuated and the expander tool 400 is urged upwards in the wellbore 305. In this manner, the expander tool 400 can be used to enlarge the diameter of the second

casing string 810 circumferentially to a uniform size along a predetermined length in the wellbore 305.

Figure 11 depicts an alternate embodiment of an apparatus 600 of the present invention. A first casing string 610 has an earth removal member, preferably a cutting structure 615, operatively attached to its lower end. The cutting structure 615 is preferably a drill bit constructed of a drillable material 612, preferably aluminum, and small, substantially spherical cutting members 613, preferably constructed of tungsten carbide or polycrystalline diamond, disposed around the drillable material 612 for drilling into a formation 620. The cutting structure 615 includes any earth removal member. The cutting structure 615 has at least one perforation (nozzle) 616 extending therethrough to allow drilling fluid to circulate within the formation 620 while drilling.

An attenuator 505 is disposed on or in the first casing string 610. In the embodiment shown, the attenuator 505 is disposed circumferentially around an outer diameter of a lower end of the first casing string 610. The attenuator 505 is preferably compressible due to radial force, but capable of withstanding hydrostatic pressure within a wellbore 605. Cement or another comparable physically alterable bonding material must be capable of bonding to the attenuator 505. Preferably, the attenuator 505 is constructed of compressible aluminum.

The attenuator 505 includes a wall 510 located a distance radially from the outer diameter of the first casing string 610. The wall 510 is connected to the first casing string 610 by one or more webs 515, preferably a plurality of webs 515, extending radially therefrom. In between the plurality of webs 515 is at least one void area 520. The wall 510 and the plurality of webs 515 prevent cement and other fluids from entering the void areas 520, so that the webs 515 compress into the void areas 520 upon radial force exerted by an expander tool 400 (see Figure 14A).

In an alternate embodiment, the attenuator 505 may be constructed of a compressible material with voids disposed therein. In this embodiment, because the material is inherently compressible, the webs 515 and the void areas 520 are not necessary. Preferably in this embodiment, the attenuator 505 is constructed of a porous material which is compressible due to radial force, but withstands hydrostatic pressure. More preferably, the attenuator 505 is constructed of styrofoam.

Figures 12-13 depict a second casing string 710 with an expandable earth removal member, preferably an expandable cutting structure 705, operatively connected to its lower end. The expandable cutting structure 705 and the second casing string 710 are substantially identical in structure and operation to those described above in relation to Figures 6-10. Figure 14 shows the expander tool 400, which is substantially identical in structure and operation to the expander tool 400 of Figure 9, expanding the second casing string 710 into contact with the first casing string 610. The attenuator 505 is shown compressed by the expander tool 400 in Figures 14 and 14A.

In the operation of the first embodiment illustrated in Figures 6-10, the first casing string 310 with the cutting structure 315 attached thereto is lowered into the formation 320 with a draw works (not shown), for example, and at least a portion of the first casing string 310 (e.g., the cutting structure 315) may optionally be simultaneously rotated, preferably by a top drive (not shown) or a mud motor (not shown). While the first casing string 310 is being drilled into the formation 320, drilling fluid is simultaneously introduced into the inner diameter of the first casing string 310. Referring to Figure 6, the fluid flows through the first casing string 310, through the check valve 350, through the longitudinal bore 323, through the perforations 316 in the cutting structure 315, and up through the annular space 335. The check valve 350 prevents the fluid from flowing back up through the first casing string 310 to the surface, thus forcing the fluid out into the formation 320.

After the first casing string 310 is drilled to the desired depth within the formation 320, the flow of drilling fluid is halted. To determine when the first casing string 310 has reached the desired depth within the formation 320, logging-while-drilling or measuring-while-drilling may be utilized, as is known by those skilled in the art. Specifically, one or more logging and/or measuring tools may be employed within or on the first casing string 310 to determine by measuring one or more geophysical parameters in the formation 320 whether the first casing string 310 is proximate to the desired location. Exemplary geophysical parameters which may be sensed within the formation 320 include but are not limited to resistivity of the formation 320, pressure, and temperature.

A physically alterable bonding material, preferably a setting fluid such as cement, may then be introduced into the first casing string 310. A volume of cement is introduced into the first casing string 310 which is sufficient to fill at least a portion of the annular space 335 between the first casing string 310 and the wellbore 305, thus cementing the first casing string 310 into the formation 320. The cement flows through the first casing string 310, through the check valve 350, through the longitudinal bore 323, through the perforations 316 in the cutting structure 315, and up through the annular space 335. The check valve 350 prevents the cement from flowing back up through the casing string 310 to the surface, thus forcing the cement flow out into the formation 320. After the cement is pumped into the wellbore 305, drilling fluid may optionally be pumped into the first casing string 310 to ensure that most of the cement exits the lower end of the cutting structure 315. Figure 6 shows the first casing string 310 set at the desired depth within the formation 320 by cement within the annular space 335.

Once the first casing string 310 has been set within the formation 320 when the cement cures, the second casing string 810 is utilized to drill through the drillable cementing assembly 330 within the first casing string 310. The outer diameter of the second casing string 810 is necessarily smaller than the inner diameter of the first casing string 310, so that the second casing string 810 fits within the first casing string 310. Similarly, the largest portion of the expandable cutting structure 805 must be smaller than the inner diameter of the first casing string 310 while the expandable cutting structure 805 is in the retracted position.

The second casing string 810 is lowered (e.g., by the draw works) into the inner diameter of the first casing string 310 while optionally a portion of the first casing string 315 is being rotated by the top drive or mud motor. At the same time, drilling fluid is introduced into the inner diameter of the second casing string 810. The drilling fluid forces the drillable portions within the inner diameter of the first casing string 310 upward toward the surface and forms a path through the first casing string 310 for the expandable cutting structure 805 to travel.

Figure 7 shows the second casing string 810 drilling through the inner diameter of the first casing string 310. Specifically, the second casing string 810 drills through

and substantially destroys the drillable cementing assembly 330, including the check valve 350, the cement within the annular area 332, the tubular member 331, and the drillable portion 340. When the expandable cutting structure 805 drills to the cut-away portion 325, the inner diameter of the cut-away portion 325 may be too large for the expandable cutting structure 805 to reach while in the closed position; therefore, the voids in the drillable material 340 ensure that the portion of the drillable material 340 between the inner diameter of the first casing string 310 and the outermost portion of the expandable cutting structure 805 falls out. In the alternative, the expandable cutting structure 805 may be expanded to the open position to drill through the drillable material 340 within the cut-away portion 325. Finally, the expandable cutting structure 805 drills through the cutting structure 315. The drillable material 312 on the cutting structure 315 is destroyed, while the cutting members 313 are washed up toward the surface around the outer diameter of the second casing string 810 by the drilling fluid circulated through the wellbore 305.

After the expandable cutting structure 805 has destroyed the cutting structure 315, the expandable cutting structure 805 is actuated so that the blades 806,807 are in the extended position. The blades 806,807 are extended when the nozzles 385 cause a hydraulic pressure differential within the second casing string 810. In the extended position, the blades 806, 807 are capable of forming a portion of the wellbore 305 below the first casing string 310 with a larger inner diameter than the inner diameter of the first casing string 310 so that the second casing string 810 may be expanded to have the same inner diameter as the first casing string 310, thus forming a substantially monobore well.

The second casing string 810 is then lowered and optionally at least a portion of the second casing string 810 is rotated while circulating drilling fluid so that the second casing string 810 is drilled to a second depth within the formation 320. The inner diameter of the wellbore 305 below the first casing string 310 is larger than the inner diameter of the casing string 310. Figure 8 shows the extended expandable cutting structure 805 drilling within the formation 320 to a second depth.

Next, the expander tool 400 is lowered into the inner diameter of the first casing string 310 and the second casing string 810. Fluid is introduced through the working string 406 so that the pistons urge the rollers 416 against the inner diameter of the second casing string 810. The expander tool 400 rotates as the rollers are actuated and the expander tool 400 is urged upwards in the wellbore 305, so that the second casing string 810 is expanded along its length. A portion of the second casing string 810 is expanded into contact with the cut-away portion 325. As shown in Figure 9, the upper portion of the second casing string 810 is expanded into contact with the cut-away portion 325. In another aspect, a portion of the second casing string 810 is expanded into contact with the cut-away portion 325, and the portion of the second casing string 810 located above the cut-away portion 325 and extending into the inner diameter of the first casing string 310 is cut off of the second casing string 810.

The expander tool 400 may be removed from the wellbore 305 after expansion of the second casing string 810 is completed. Figure 10 shows a portion of the second casing string 810 expanded into contact with the cut-away portion 325 of the first casing string 310 and a remaining portion of the second casing string 810 expanded into the wellbore 305. The inner diameter of the portion of the second casing string 810 below the first casing string 310 is at least at large as the inner diameter of the first casing string 310, so that the inner diameter of the cased wellbore does not decrease with increased depth within the wellbore 305. Figure 10 shows essentially a monobore well, which denotes a wellbore which has substantially the same diameter at every depth and length. Additional casing strings may be used to drill through the second casing string 810. The additional casing strings and the second casing string 810 may include cut-away portions 325 with drillable portions 340 located therein and may be expanded into the previous casing strings.

After removal of the expander tool 400 from the wellbore 305, a cementing operation may optionally be conducted to cement the second casing string 810 within the formation 320. A physically alterable bonding material such as cement is introduced into the inner diameter of the first casing string 310, then flows through the inner diameter of the second casing string 810, through the nozzles 385, and up through the annular space 335. Additional casing strings with expandable cutting

structures operatively attached thereto may be used to drill through the expandable cutting structure 805 and the additional expandable cutting structures.

In the operation of the second embodiment shown in Figures 11-14A, the first casing string 610 with the cutting structure 615 operatively attached thereto is lowered and optionally at least a portion of the first casing string 610 is rotated as described above in relation to the casing string 310 of Figures 6-10. While the casing string 610 is being drilled into the formation 620, drilling fluid is simultaneously introduced into the inner diameter of the casing string 610 so that the fluid flows through the casing string 610, through the perforations 616 in the cutting structure 615, and up through the annular space 635 between the first casing string 610 and the formation 620.

The first casing string 610 is drilled to the desired depth within the formation 620. To determine when the first casing string 610 has reached the desired depth within the formation 620, logging-while-drilling and/or measuring-while-drilling may be utilized, as is known by those skilled in the art. Specifically, one or more logging tools and/or measuring tools may be employed to determine by measuring one or more geophysical parameters in the formation 620 whether the first casing string 610 is proximate to the desired location. Exemplary geophysical parameters which may be sensed within the formation 620 include but are not limited to resistivity of the formation 620, pressure, and temperature.

After the first casing string 610 is drilled to the desired depth within the formation 620, the flow of drilling fluid is halted. A physically alterable bonding material, preferably a setting fluid such as cement, may then optionally be introduced into the first casing string 610 to fill at least a portion of the annular space 635 as described above in relation to the first casing string 310 of Figures 6-10. The cement flows through the first casing string 610, through the perforations 616 in the cutting structure 615, and up through the annular space 635 past the attenuator 505. After the cement is pumped into the wellbore 605, drilling fluid may optionally be pumped into the first casing string 610 to ensure that most of the cement exits the lower end of the cutting structure 615. Figure 11 shows the first casing string 310 set at the desired depth within the formation 620 by cement within the annular space 635. Cement bonds with the wall 510 of the attenuator 505.

Next, the second casing string 710 is lowered and optionally at least a portion of the second casing string 710 is rotated into the first casing string 610 as described in relation to casing strings 310 and 810 of Figures 6-10. Drilling fluid is simultaneously circulated through the second casing string 710, out the nozzles 685, and up through the annular space between the first casing string 610 and the second casing string 710. Initially, the expandable cutting structure 705 is in the retracted position as it travels through the inner diameter of the first casing string 610. Figure 12 shows the second casing string 710 running into the first casing string 610 with the expandable cutting structure 705 in the retracted position.

The expandable cutting structure 705 is then used to drill through the drillable material 612 of the cutting structure 615. The fluid circulating within the wellbore 605 carries the cutting members 613 through the annular space between the inner diameter of the first casing string 610 and the outer diameter of the second casing string 710 toward the surface. The expandable cutting structure 705 is then extended to the open position below the first casing string 605 as described above in relation to the expandable cutting structure 805 of Figures 6-10. Figure 13 shows the expandable cutting structure 705 forming a portion of the wellbore 605 below the first casing string 610 which is at least as large in inner diameter as the inner diameter of the first casing string 610.

The second casing string 705 is drilled to a second desired depth within the formation 620. The expander tool 400 is then lowered into the wellbore 605 and is actuated to expand the second casing string 710 along its length as described above in relation to Figures 6-10. When the expander tool 400 is moved upwards (and/or downwards) within the second casing string 710 to expand the portion of the second casing string 710 adjacent to the attenuator 505, the first casing string 610 bends outward radially toward the inner diameter of the wellbore 605. The first casing string 610 is able to move within the cement portion of the annular space 635 because the attenuator 505 is crushed by the expansion force exerted by the expander tool 400. Figure 14 illustrates the expander tool 400 expanding the second casing string 710 to compress the attenuator 505 so that the inner diameter of the portion of the second casing string 710 adjacent the attenuator 505 is at least as large as the smallest portion of the inner diameter of the first casing string 610.

Figure 14A shows the attenuator 505 after expansion. The webs 515 are compressed to invade the void areas 520, thus allowing room for the first casing string 610 to move toward the inner diameter of the wellbore 605 to make room for the second casing string 710. The wall 510 remains pressed against the cement within the annular space 635.

At the end of the operation, the expander tool 400 may be removed from the wellbore 605. A physically alterable bonding material such as cement may optionally be introduced into the wellbore 605 and flowed through the casing strings 610, 710, through the nozzles 685, and up through the annular space 635 to cement the second casing string 710 within the wellbore.

In an additional aspect of the present invention, the second casing string 710 may also include an attenuator 505 at a lower portion around its outer diameter. Additional casing strings with expandable cutting structures attached thereto and attenuators around their outer diameters may then be used to drill through previous expandable cutting structures and experience expansion to compress the attenuators, as described above, to form a wellbore of a desired depth.

In a further additional aspect of the present invention, a portion of the second casing string 710 is expanded into contact with the first casing string 610, and the portion of the second casing string 710 located above the attenuator 505 and extending into the inner diameter of the first casing string 610 is cut off of the second casing string 710.

In yet a further additional aspect of the present invention, the attenuator 505 or compressible member of Figures 11-14 may be located within an enlarged inner diameter portion (not shown) of the first casing string 610. The second casing string 710 may be used to drill through the first casing string 610 as described above in relation to Figures 11-14. Then, a portion of the second casing string 710 may be expanded into the enlarged inner diameter portion. The attenuator 505 compresses so that the portion of the second casing string 710 is moveable through the enlarged inner diameter portion of the first casing string 610 to form a substantially monobore well. Additional casing strings may be used to drill through the second casing string 710 and subsequent casing strings and through the formation. The additional casing strings as

well as the second casing string 710 may include enlarged inner diameter portions and attenuators disposed therein.

The cutting structures 315 and 615 and the expandable cutting structures 805 and 705 are described above as connected to the lower end of the casing strings 310, 810, 610, and 710. It is understood that the cutting structures 315, 615, 805, and 705 are operatively disposed at the lower end of the casing strings 310, 810, 610, and 710, so that the cutting structures may be disposed at any location on the casing strings where the cutting structures are capable of drilling through the formation. As such, it is understood that the cutting structure may be connected at, for example, a middle portion of the casing string, and the cutting structure may protrude below the casing string in a position to drill through the formation.

Providing a method and apparatus for drilling with casing to form a substantially monobore well by use of the embodiments of the present invention increases the possible inner diameter of a cased wellbore formed by drilling with casing. As a consequence, flexibility in the tools which are capable of being run into the cased wellbore is increased. Furthermore, forming a substantially monobore well using drilling with casing technology in embodiments of the present invention allows a wellbore of substantially the same inner diameter along its length to be formed in less time compared to conventional drilling methods.

Embodiments of the present invention also advantageously provide apparatus and methods for maintaining a fluid bypass around casing during a drilling with casing operation after hanging casing within an open hole or cased wellbore. Use of embodiments of the present invention allows for creation of a substantially monobore well by drilling with casing.

Figure 15 shows casing 910, at least a portion of the casing 910 profiled, having an earth removal member 950 operatively attached to its lower end. The casing 910 may include a casing section, or may include two or more casing sections connected, preferably threadedly connected to one another, to form a casing string 910. The casing 910 may be a tubular string, wherein only a portion of the tubular string is casing, or it may be only casing.

The earth removal member 950 is preferably a cutting structure, most preferably a drill bit, having one or more fluid passages 952 and/or 953 to allow for fluid flow therethrough. The earth removal member 950 may be an expandable cutting structure, the operation and structure of which is shown and described below in relation to the earth removal member 1550 of Figures 21-25. Alternately, the earth removal member 950 may be drillable.

The earth removal member 950 may be attached to any portion of the casing 910 which allows for drilling with the casing 910 into a formation 905. Preferably, the connection between the earth removal member 950 and the casing 910 is temporary to allow for retrieval of the earth removal member 950 during the drilling operation (described below). Figure 15 depicts the earth removal member 950 attached to the casing 910 at its lower end by a temporary, shearable connection 951.

The profiled casing 910 is shown in Figure 15B. The profiled casing 910 has a generally tubular-shaped body with one or more gripping members 920 formed on its outer diameter at a first location, or a leg 935. Preferably, three legs 935 are formed on the casing 910 at three locations, each leg 935 preferably having gripping members 920 formed on its outer diameter. The gripping members 920, which are preferably slips having grit or teeth, provide gripping force to allow the casing 910 to frictionally engage a wellbore 930 to hang the casing 910 within the wellbore 930.

One or more fluid bypass areas 940 are formed between the legs 935 to provide a fluid path around the outside of the casing 910. The casing 910 is preformed into an irregular, profiled shape to create the bypass areas 940. The fluid bypass areas 940, as well as the casing 910, may be of any shape which allows for sufficient circulation of fluid around the outside of the casing 910 after the casing has been hung within the wellbore 930 and also permits eventual expansion of the casing 910 circumferentially during the various stages of the drilling operation. Alternatively, the fluid bypass areas 940 may be formed downhole from casing which is substantially circumferential. A sealing member 960 may be disposed around the outer diameter of the casing 910 to seal between the casing 910 and the wellbore 930 upon expansion of the casing 910. The sealing member 960 is preferably an elastomeric ring.

Referring again to Figure 15, a setting tool 1200, an expander tool 1100, and one or more carrying dogs 931 are located on a running string 1300. The running string 1300 is releasably connected, preferably threadedly connected, to the earth removal member 950. The running string 1300 may also be releasably connected to the casing 910 by carrying dogs 931 disposed in slots 932 within the inner surface of the casing 910.

An exploded view of the setting tool 1200 is shown in Figure 15C. The setting tool 1200 has a body 1202 which is hollow and generally tubular and may have connectors 1204 and 1206 for connection to other components of a downhole assembly, including the earth removal member 950. The central body part has one or more recesses 1214 to hold one or more radially extendable setting members 1216. Each of the recesses 1214 has parallel sides and extends from a radially perforated inner tubular core (not shown) to the exterior of the tool 1200. Each mutually identical setting member 1216 is generally rectangular having a beveled setting surface and a piston surface 1218 on the back thereof in fluid communication with pressurized fluid delivered by the running string 1300. Pressurized fluid provided from the surface of the well, via the running string 1300, can actuate the setting members 1216 and cause them to extend outward and to contact the inner wall of casing 910 to be expanded.

An exploded view of the expander tool 1100 is shown in Figure 15D. The expander tool 1100, which is run into the wellbore on the running string 1300, has expandable, fluid actuated members disposed on a body. During expansion of casing, the casing walls are expanded past their elastic limit.

The expander tool 1100 has a body 1102 which is hollow and generally tubular and may have connectors 1104 and 1106 for connection to other components (not shown) of the downhole assembly. The connectors 1104 and 1106 may be of a reduced diameter compared to the outside diameter of the longitudinally central body part of the expander tool 1100. The central body part has one or more recesses, shown here as three recesses 1114, to hold a respective expansion member, preferably a roller 1116. Each of the recesses 1114 has parallel sides and extends radially from a radially perforated tubular core (not shown) of the expander tool 1100. Each of the mutually identical rollers 1116 is generally cylindrical and barreled.

Each of the rollers 1116 is mounted by means of an axle 1118 at each end of the respective roller 1116 and the axles 1118 are mounted in slidable pistons 1120. The rollers 1116 are arranged for rotation about a respective rotational axis which is parallel to the longitudinal axis of the expander tool 1100 and, in the embodiment shown, radially offset therefrom at approximately 120-degree mutual circumferential separations around the central body 1102. The axles 1118 are formed as integral end members of the rollers 1116 and the pistons 1120 are radially slidable, one piston 1120 being slidably sealed within each radially extended recess 1114. The inner end of each piston 1120 is exposed to the pressure of fluid within the hollow core of the expander tool 1100 by way of the radial perforations in the tubular core. In this manner, pressurized fluid provided from the surface of the well, via the running string 1300, can actuate the pistons 1120 and cause them to extend outward and to contact the inner wall of the casing 910 to be expanded.

Additionally, at an upper and a lower end of the expansion tool 1100 are preferably a plurality of non-compliant rollers 1103 constructed and arranged to initially contact and expand the casing 910 prior to contact between the casing 910 and fluid actuated rollers 1116. Unlike the compliant, fluid actuated rollers 1116, the non-compliant rollers 1103 are supported only with bearings and do not change their radial position with respect to the body 1102 of the expander tool 1100.

As shown in Figure 16, the expansion tool 1100 has a bore 1180 therethrough through which fluid may flow at various stages of the operation. Similarly, the setting tool 1200 has a bore 1280 therethrough through which fluid may flow at various stages of the operation. The bore 1180 of the expansion tool 1100 preferably has a larger diameter than the bore 1280 of the setting tool 1200. A bore 980 also exists below bore 1280 which preferably has an even smaller diameter than the diameter of bore 1280. The operation and purpose of the increasingly smaller bore 980, 1180, 1280 sizes are described below.

When using the expansion tool 1100, the casing being acted upon by the expansion tool 1100 is expanded past its point of elastic deformation. In this manner, the inner diameter and outer diameters of the expandable tubular are increased in the wellbore. By rotating the expansion tool 1100 in the wellbore and/or moving the

expansion tool 1100 axially in the wellbore with the rollers 1116 actuated, the casing 910 can be expanded by plastic deformation into the wellbore 930 (or already existing casing of a cased wellbore).

In operation, the running string 1300 is initially made up to include the carrying dogs 931, expander tool 1100, and setting tool 1200 therein. The lower end of the running string 1300 is threadedly connected to the earth removal member 950 above its fluid passages 952 and 953. The running string 1300 components are configured so that the setting tool 1200 is located within the profiled portion of the casing 910 at the lower end of the casing 910. The carrying dogs 931 are extended into corresponding slots 932 in the casing 910. In this configuration, the casing 910 with the releasably connected running string 1300 is run into the formation 905. The earth removal member 950 may be rotated by a mud motor (not shown) while the casing 910 is being run into the formation 905. In the alternative, the entire casing string 910 including the earth removal member 950 may be rotated while running the casing 910 into the formation 905. It is also contemplated that, if the formation 905 is sufficiently soft, the casing 910 may be merely pushed into the formation 905 while circulating drilling fluid ("jetted") into the formation 905 without rotating the earth removal member 950 or the casing 910. Any combination of rotating the earth removal member 950 only, rotating the casing 910, or jetting the casing 910 may also be utilized to drill the casing 910 into the formation 905 to form the wellbore 930.

While the casing string 910 is drilling into the formation 905, drilling fluid F is preferably introduced into the inner diameter of the running string 1300. The drilling fluid F then travels through the expander tool 1100 and setting tool 1200, through the passages 952 and 953 through the earth removal member 950 and out through the earth removal member 950, then up to the surface of the well through an annulus A between the outer diameter of the casing 910 and the inner diameter of the wellbore 930 which is being drilled. The casing string 910 is drilled to the desired depth within the formation 905, as shown in Figure 15. Figure 15A illustrates a downward view along line 15A-15A of Figure 15 at this step in the operation. The setting members 1216 are unextended, and the casing 910 is in position for expansion by extension of the setting members 1216.

Next, a ball 1291 is dropped into the bore 1180, as shown in Figure 16. The ball 1291 is sized so that it stops at a ball seat 1290 formed at the junction between the larger bore 1280 and the smaller bore 980. After the ball 1291 is seated at the ball seat 1290, fluid F is introduced into the bore 1180. The presence of the ball 1291 halts fluid F flow through the bore 980 and increases fluid pressure within the setting tool 1200. The increased fluid pressure actuates the setting members 1216, thereby forcing the setting members 1216 outwards radially into contact with the legs 935 so that the profiled portion of the casing 910 including the legs 935 is expanded past its elastic limit along at least a portion of its outer diameter proximate to where the gripping members 920 are formed. The outer diameter of the legs 935 of the casing 910 grippingly engage the wellbore 930 to hang the casing 910 within the wellbore 930, while at the same time leaving a pathway through which fluid may bypass through the fluid bypass areas 940 in between the expanded legs 935. Figure 16 shows the casing 910 set within the wellbore 930. Figure 16A shows line 16A-16A of Figure 16 with the setting members 1216 having expanded the legs 935 into contact with the wellbore 930 and the fluid bypass areas 940 remaining intact. In an alternative embodiment, the expander tool 1100 may be utilized to expand the legs 935 to frictionally engage the wellbore 930 by positioning the expander tool 1100 at approximately the location of the setting tool 1200 in Figures 15-20, thus eliminating the need for the setting tool 1200.

After the casing 910 has been expanded at the legs 935 into frictional contact with the wellbore 930, fluid pressure is increased within the bore 1280 to a fluid pressure above the rated limit of the ball seat 1290 to blow the ball 1291 out of the ball seat 1290. When the ball 1291 is blown out of the ball seat 1290, fluid flow through the bores 1180, 1280, and 980 within the running string 1300 is again unimpeded. At this point, the wellbore 930 may be conditioned and/or cemented by any conventional means. A cementing operation may be conducted by introducing cement or some other physically alterable bonding material into the running string 1300, as shown in Figure 17. Cement flows through the bores 1180, 1280, and 980, out through the passages 952 and 953 in the earth removal member 950, then up through the annulus A between the outer diameter of the casing 910 and the wellbore 930 to the desired height. When flowing up through the annulus A, the cement flows up through the fluid bypass areas 940 and then up through the annulus A between the unexpanded casing

910, which is above the profiled portion of the casing 910, and the wellbore 930. Figure 17 shows the cement having risen to a level at the top of the casing 910, but it is contemplated that cement may rise to any level with respect to the casing 910.

After sufficient cement has been introduced into the annulus A but before the cement has cured, the carrying dogs 931 are retracted from the slots 932 and the temporary connection 951 connecting the earth removal member 950 to the casing 910 is released. The temporary connection 951 is preferably released by shearing the earth removal member 950 from the casing 910 by downward pushing or upward pulling of the running string 1300. Drilling fluid F is then introduced into the running string 1300 and the mud motor rotates the earth removal member 950 to drill the running string 1300 to a further depth within the formation 905. Other methods of drilling mentioned above, including rotating the entire running string 1300 or jetting the running string 1300 into the formation 905 may also be utilized, alone or in combination with one another. The running string 1300 is drilled to a further depth within the formation 905 to allow location of the expander tool 1100 adjacent the profiled lower end of the casing 910 within the casing 910. Figure 18 shows the running string 1300 drilled to a further depth within the formation 905 to extend the wellbore 930.

Next, the drilling of the running string 1300 is halted, and fluid flow through the running string 1300 may be stopped. The running string 1300 is preferably drilled to the depth where the expander tool 1100 is located at the lowermost end of the casing 910. In this embodiment, the expansion of the casing 910 is from the bottom up. In the alternative, the expander tool 1100 may be located adjacent to the upper end of the profiled portion of the casing 910, if the expander tool 1100 is moved downward for the expansion of the profiled portion of the casing 910.

As shown in Figure 19, a ball 1191, larger than the ball 1291, is introduced into the bore 1180 and stops in a ball seat 1190. (In an alternate embodiment, the ball 1191 may be placed within the ball seat 1190 prior to locating the expander tool 1100 at the proper axial position adjacent the profiled portion of the casing 910.) Pressure build-up from the increased fluid pressure instigated by the presence of the ball 1191 within the expander tool 1100 activates the expander tool 1100 so that the rollers 1116 are urged radially outward from the expander tool 1100 to contact the casing 910

therearound. The expander tool 1100 exerts force against the wall of the casing 910 while rotating and preferably (but optionally) moving axially within the casing 910. The rollers 1116 thereby expand the casing 910 wall past its elastic limits around the circumference of the casing 910 at the profiled lower end.

Gravity and the weight of the components can move the expander tool 1100 downward in the casing 910 even as the rollers 1116 of the expander tool 1100 are actuated. Alternatively, the expansion can take place in a "bottom up" fashion by providing an upward force on the running string 1300. A tractor (not shown) may be used in a lateral wellbore or in some other circumstance when gravity and the weight of the components are not adequate to cause the actuated expander tool 1100 to move downward along the wellbore 930. Additionally, the tractor may be necessary if the expander tool 1100 is to be used to expand the casing 910 wherein the tractor provides upward movement of the expander tool 1100 in the wellbore 930. Preferably, the non-compliant rollers 1103 at the lower end of the expander tool 1100 contact the inner diameter of the casing 910 as the expansion tool 1100 is raised. This serves to smooth out the legs 935 and reform the casing 910 into a circular shape prior to fully expanding the casing 910 into the wellbore 930. The casing 910 is then expanded into circumferential contact with the wellbore 930. Figure 19 shows the expander tool 1100 in the process of expanding the lower, profiled portion of the casing 910 into circumferential contact with the wellbore 930, from the bottom up.

The expander tool 1100 is preferably then utilized to expand the remainder of the casing 910 above the profiled portion to a desired extent, preferably leaving at least some cement outside the casing 910 to securely set the casing 910 within the wellbore 930. The remaining portion of the casing 910 may be expanded from the bottom up or from the top down. Expanding this remaining portion increases the inner diameter of the casing 910 along its length, thus expanding the available diameter within the wellbore 930. After the expansion is complete, the cement may be allowed to cure to set the casing 910 within the wellbore 930.

Fluid pressure is then increased to a pressure above the operating pressure of the expander tool 1100 to blow the ball 1191 through the frangible ball seat 1190. The ball 1191 then flows through the running string 1300 and to the surface with the fluid up

through the annulus between the inner diameter of the casing 910 and the outer diameter of the running tool 1300. Consequently, a fluid path through the bores 980, 1180, and 1280 is again unobstructed and the rollers 1116 of the expander tool 1100 are retracted. The retractable earth removal member 950 is retracted, and the running string 1300 is removed from the wellbore 930.

Figure 20 shows the casing 910 set within the wellbore 930 after the running string 1300 is removed. The casing 910 is preferably bell-shaped at the end of the expansion process, so that the casing 910 has a larger inner diameter at its lower end to permit a subsequent casing section or casing string (not shown) to be expanded into the bell-shaped portion. Expanding the subsequent casing section or casing string into the bell-shaped lower end of the casing 910 allows for formation of a substantially monobore well, or a cased wellbore having an inner diameter that does not decrease with increasing depth. The process shown in Figures 15-20 may be repeated any number of times with any number of casing strings or casing sections expanded into one another to form a cased wellbore of any desired depth.

Figure 20A shows the bell-shaped portion of the casing 910 along line 20A-20A of Figure 20. The lower portion of the casing 910 is expanded into contact with the wellbore 930 to form an essentially circumferential inner diameter of the casing 910.

In an alternate embodiment, the earth removal member 950 may be drillable rather than retractable. While a ball and ball seat arrangement is described, it should be understood that any appropriate valve arrangement may be used, such as a dart or a sleeve for isolating fluid flow from the running string 1300 to the setting tool 1200 and/or expander tool 1100.

Figures 21-25 illustrate an alternate embodiment of the present invention. Figure 21 shows casing 1500 drilling a wellbore 1510 into a formation 1515. The casing 1500 may include a casing section, or may include two or more casing sections connected to one another, preferably threadedly connected to one another, to form a casing string. A portion of the casing 1500 has a fluid path therethrough. The fluid path in the embodiment of Figure 21 is in the form of one or more openings 1525 to allow setting fluid, such as cement, to pass through the casing 1500.

An earth removal member 1550 is operatively connected to a lower end of the casing 1500. As shown in Figure 21, the earth removal member 1550 is shearably connected to the lower end of the casing 1500. The earth removal member 1550 is preferably a cutting structure, more preferably a drill bit. The earth removal member 5 1550 is preferably expandable and retractable, and may be the retractable drill bit described in U.S. Patent Number 6,953,096, filed on December 31, 2002.

The expandable earth removal member 1550 generally includes a set of blades which move between the open and closed position. Hydraulic fluid flowing through the earth removal member 1550 controls the movement of the blades between the open and closed position. The expandable earth removal member 1550 may be retrievable after expansion in its retracted state. In the alternative, the expandable cutting structure 1550 may be an expandable drill bit constructed of drillable material such as aluminum, as described in U.S. Patent Number 6,953,096. The expandable drill bit of U.S. Patent Number 6,953,096 has a plurality of cutting members disposed on an outer portion of the blades. The cutting members are typically small and substantially spherical, and may be made of tungsten carbide or polycrystalline diamond surfaces. The blades are constructed and arranged to permit the cutting members to contact and drill the earth when the blades are expanded outward and not ream the wellbore or surrounding casing when the blades are collapsed inward.

Fluid passages 1552 and 1553 extend through the earth removal member 1550 to provide a fluid path through the earth removal member 1550. Fluid passages 1552 and 1553 are in fluid communication with a longitudinal bore through the casing and allow jetting of the drilling fluid during the drilling operation through the casing to remove any cuttings build up which may gather in front of the blades and to form a path for the casing through the formation. Furthermore, the fluid passages 1552 and 1553 (also termed nozzles) are used to create a hydraulic pressure differential within the bore through the casing to cause the blades of the expandable cutting structure to expand outward, as described in U.S. Patent Number 6,953,096.

The casing 1500 may optionally include one or more sealing members 1560 on its outer diameter for sealing an annular area A between the casing 1500 and the wellbore 1510. Additionally, the casing 1500 may optionally include one or more gripping members 1520 on a portion of its outer diameter to allow the casing 1500 to be initially hung within the wellbore 1510 due to frictional engagement of the gripping members 1520 with the wellbore 1510. The sealing members 1560 are preferably constructed of an elastomeric material, and the gripping members 1520 are preferably slips. Preferably, the sealing members 1560 and gripping members 1520 are located below the openings 1525, and the sealing members 1560 are located above the gripping members 1520 on the casing 1500.

A running string 1570 is releasably connected to the casing 1500, preferably by retractable carrying dogs 1531 disposed in slots 1532 in the inner diameter of the casing 1500. The expander tool 1100 shown and described in relation to Figure 15D is connected, preferably threadedly connected, to a lower end of the running string 1570. The lower end of the expander tool 1100 may be threadedly connected to an upper portion of the earth removal member 1550.

In operation, as shown in Figure 21, the casing 1500 is lowered into the formation 1515 while introducing drilling fluid through the running string 1570. The earth removal member 1550 (or the casing 1500 itself) may be rotated, if necessary or desired to drill through the formation 1515 to form the wellbore 1510, while the casing 1500 is lowered into the formation 1515. While the casing 1500 is drilling into the formation 1515, the drilling fluid F flows through the running string 1570, through the passages 1552 and 1553, and up through the annular area A between the casing 1500 and the wellbore 1510. The casing 1500 may be drilled to a further depth than the eventual setting depth of the casing 1500 within the wellbore 1510 to allow additional room for the running string 1570 to be lowered within the drilled-out portion of the wellbore 1510 in further steps in the operation of the present invention.

Next, as illustrated in Figure 22, a ball 1591 is introduced into a bore 1580 of the running string 1570. The ball 1591 stops at a ball seat 1590 within the bore 1580 of the running string 1570. Fluid F is then introduced into the running string 1570, and the pressurized fluid forces the rollers 1116 (see Figure 15D) of the expander tool 1100 to

extend radially outward from the expander tool 1100 to contact the casing 1500 therearound. The rollers 1116 thereby expand the wall of the casing 1500 past its elastic limits in the portions at which each roller 1116 extends to initially anchor the casing 1500 within the wellbore 1510.

The carrying dogs 1531 are next retracted from the slots 1532 in the casing 1500, and the earth removal member 1550 is removed from its releasable engagement with the casing 1500. The expander tool 1100 may now be rotated relative to the casing 1500 to expand the casing 1500 along its circumference into the wellbore 1510, as described above in relation to Figures 15-20. The lack of attachment between the casing 1500 and the running string 1570 allows the expander tool 1100 to move axially downward and rotate to expand the remainder of the lower portion of the casing 1500, as shown in Figure 23. The axial movement of the expander tool 1100 in relation to the casing 1500 is accomplished as described above in relation to Figures 15-20.

The expander tool 1100 exerts force against the wall of the casing 1500 while rotating and moving axially within the casing 1500. The rollers 1116 thereby expand the casing 1500 wall past its elastic limit around the circumference of the casing 1500 at the lower end. Alternatively, the expansion can take place in a "bottom up" fashion by providing an upward force on the running string 1570, as described above in relation to Figures 15-20.

Fluid pressure in the running string 1570 is then increased to a pressure above the operating pressure of the expander tool 1100. The ball 1591 is blown through the frangible ball seat 1590, then flows up to the surface with the fluid up through the annulus A. The rollers 1116 of the expander tool 1100 are thus retracted due to lack of fluid pressure within the expander tool 1100, and the bore 1580 is again unobstructed to allow fluid flow therethrough.

As shown in Figure 24, a setting fluid 1555, preferably cement, is next introduced into the running string 1570 from the surface of the wellbore 1510. The setting fluid 1555 flows through the running string 1570, out through the passages 1552 and 1553 of the earth removal member 1550, up through the annulus between the outer diameter of the running string 1570 and the inner diameter of the casing 1500, then out through the openings 1525 into the annulus A between the casing 1500 and

the wellbore 1510. The setting fluid 1555 may fill only a portion of the annulus A or, in the alternative, may be allowed to fill up the annulus A. Figure 24 shows the setting fluid 1555 flowing up through the annulus A through openings 1525 to substantially fill the annulus A with setting fluid 1555.

When sufficient setting fluid 1555 exists in the annulus A, setting fluid 1555 is no longer introduced into the running string 1570. After halting the setting fluid 1555 flow, the running string 1570 is moved axially upward within the wellbore 1510 so that the rollers 1116 of the expander tool 1100, upon radial extension, contact the unexpanded portion of the casing 1500 which is above the portion of the casing 1500 already expanded into the wellbore 1510. A second ball (not shown), which is larger than the ball 1591, may be introduced into the running string 1570. The second ball stops in a second ball seat (not shown), which is larger than the ball seat 1590. Again, pressurized fluid is flowed into the bore 1580 of the running string 1570 to force the rollers 1116 radially outward, and the expander tool 1100 is rotated and moved upward axially to expand the portion of the casing 1500 having the openings 1525 therein into contact with the wellbore 1510. Expanding the openings 1525 into the wellbore 1510 prevents the openings 1525 from becoming a weak spot in the casing 1500 of the cased wellbore, and closes off the ports into the annulus A.

To move the expander tool 1100 upward axially, the earth removal member 1550 may be retracted to allow it to fit within the inner diameter of the casing 1500 by methods such as those disclosed in U.S. Patent Application Serial Number 10/335,957, which was above incorporated by reference.

Before the setting fluid 1555 cures, the upper portion of the casing 1500 above the openings 1525 is preferably expanded by the expander tool 1100 to some extent to increase the available space within the inner diameter of the casing 1500. This upper portion may be expanded from the bottom up, or from the top down. Preferably, the upper portion is not expanded into frictional contact with the wellbore so that at least some setting fluid 1555 remains within the annulus A to set the casing 1500 within the wellbore 1510.

The running string 1570 is then removed from the wellbore 1510. The setting fluid 1555 may be allowed to cure to set the casing 1500 within the wellbore 1510. Figure 25 shows the casing 1500 set within the wellbore 1510.

An additional casing (not shown) may then be drilled into the wellbore 1510 in the same manner as described in relation to casing 1500, and then the upper portion of the additional casing expanded into the lower portion of the casing 1500, according to the method described in Figures 21-25. Multiple casings (not shown) may also be drilled and set in the same manner. In this way, a substantially monobore well, having substantially the same inner diameter along the length of the wellbore 1510, may be formed with one run-in of each casing 1500.

In another embodiment, the earth removal member 1550 of the embodiment shown in Figures 21-25 may, rather than being retractable, be drillable. For example, the earth removal member 1550 may be a drillable bit. In this alternate embodiment, a second casing (not shown) may be used to drill through the earth removal member 1550 when in the process of casing the wellbore 1510 with the second casing.

The expander tool 1100 described above in relation to the operations shown in Figures 15-25 may be any rotary expansion tool, whether fluid operated or mechanically operated. The expansion tool 1100 may in an alternate embodiment be an expander cone or any other mechanical apparatus capable of expanding expandable tubing past its elastic limit.

In another aspect, the present invention provides a method of drilling a lateral wellbore comprising forming the lateral wellbore from a parent wellbore in a manner whereby an inner diameter of the lateral wellbore is at least as large as an inner diameter of the parent wellbore. In one embodiment, the lateral wellbore is formed in a single trip into the well. In another embodiment, the lateral is formed with an expandable bit. In another embodiment still, the lateral wellbore is formed with a bit located at the end of a string of liner. In another embodiment still, the parent wellbore is lined with casing. In another embodiment still, the method includes placing a liner in the lateral wellbore. In another embodiment still, the liner is expanded into contact with the lateral wellbore. In another embodiment still, an inner diameter of the liner is at least as large as the inner diameter of the parent wellbore.

In another aspect, the present invention provides a wellbore junction between a patent wellbore and a lateral wellbore comprising a window leading from the parent wellbore to the lateral wellbore, the window having at least one dimension thereacross greater than any corresponding dimension of the parent wellbore.

In another aspect, the present invention provides a method of forming a lined lateral wellbore comprising forming a lateral wellbore extending from a main wellbore, wherein a diameter of the lateral wellbore is larger than an inner diameter of casing lining the main wellbore, running an expandable tubular element, through the casing lining the main wellbore, into the lateral wellbore, and expanding the tubular element within the lateral wellbore, such that the expanded tubular element has an outer diameter larger than the drift diameter of the casing lining the main wellbore. In one embodiment, an inner diameter of the expanded tubular element is greater than an inner diameter of the casing lining the main wellbore. In another embodiment, the method includes cementing the tubular element into the lateral wellbore. In another embodiment still, the cementing is done after the expanding. In another embodiment still, the expandable tubular element is run into the lateral wellbore as the lateral wellbore is formed. In another embodiment still, the lateral wellbore is formed by drilling with a drilling member disposed on a bottom portion of the expandable tubular element. In another embodiment still, the drilling member is an expandable bit adapted to be drilled through by a subsequent bit without substantially damaging the subsequent bit. In another embodiment still, the drilling member a drill bit that is part of a bottom hole assembly comprising one or more tools in addition to the drill bit. In another embodiment still, at least one of the tools is a tool adapted to measure one or more downhole parameters and the method further comprises measuring one or more downhole parameters while forming the lateral wellbore. In another embodiment still, at least one of the tools is an expandable stabilizer. In another embodiment still, the method includes retrieving at least one of the tools after forming the lateral wellbore. In another embodiment still, forming the lateral wellbore comprises removing a section of the casing lining the main wellbore to form an uncased cavity; inserting a physically alterable bonding material into the cavity; and drilling the lateral wellbore through the physically alterable bonding material. In another embodiment still, the method includes expanding the diameter of the lateral wellbore to receive the expandable tubular

element. In another embodiment still, the method includes drilling through the physically alterable bonding material to provide fluid communication between the lateral wellbore and a portion of the main wellbore below a junction between the lateral wellbore and the main wellbore. In another embodiment still, forming the lateral wellbore comprises expanding at least a portion of the lateral wellbore by drilling with an expandable drill bit. In another embodiment still, the method includes forming the main wellbore and lining the main wellbore with expandable tubular elements.

In another aspect, the present invention provides a method of forming a lined lateral wellbore comprising securing a diverter within a main wellbore lined with casing; forming a lateral wellbore with an earth removal member guided by the diverter; expanding a diameter of at least a portion of the lateral wellbore; running an expandable tubular element through the casing lining the main wellbore into the lateral wellbore; and expanding the tubular element within the lateral wellbore, such that the expanded tubular element has an inner diameter equal to or larger than the inner diameter of the casing lining the main wellbore. In one embodiment, the method includes removing the diverter prior to expanding the diameter of at least a portion of the lateral wellbore. In another embodiment, expanding the diameter of at least a portion of the lateral wellbore comprises expanding a portion of the lateral wellbore extending to the main wellbore. In another embodiment still, expanding the diameter of at least a portion of the lateral wellbore comprises operating an expandable back reamer. In another embodiment still, after expanding the tubular element within the lateral element, the expanded portion of the lateral wellbore extending to the main wellbore is fully lined with the expanded tubular element. In another embodiment still, after running the tubular element into the lateral wellbore, a portion of the tubular element extends into the main wellbore and the method further comprises, after expanding the tubular element, removing the portion of the tubular element extending into the main wellbore.

In another aspect, the present invention provides a lateral wellbore extending from a main wellbore lined with casing, wherein at least a portion of the lateral wellbore is lined with casing, the lined portion of the lateral wellbore having an outer diameter larger than a drift diameter of the main wellbore casing. In one embodiment, the inner diameter of the lateral wellbore is equal to or greater than an inner diameter of the main

wellbore casing. In another embodiment, the lined portion of the lateral wellbore extends to the main wellbore. In another embodiment still, the lined portion of the lateral wellbore is lined with an expanded screen material. In another embodiment still, the lined portion of the lateral wellbore is lined with a solid expanded tubular element. In another embodiment still, the main wellbore is lined with an expanded tubular element. In another embodiment still, at least a portion of the lateral wellbore casing is cemented into the lateral wellbore.

In another aspect, the present invention provides a method of forming a cased wellbore comprising drilling a wellbore using a first casing string having an earth removal member operatively disposed at its lower end; locating the first casing string within the wellbore; locating a portion of a second casing string adjacent to a portion of the first casing string having an enlarged inner diameter; and expanding the portion of the second casing string so that the portion of the second casing string has an inner diameter at least as large as a smallest inner diameter portion of the first casing string. In one embodiment, at least one compressible member is disposed within the portion of the first casing string having the enlarged inner diameter. In another embodiment, expanding the portion of the second casing string comprises compressing at least a portion of the at least one compressible member. In another embodiment still, at least one compressible member comprises a plurality of webs moveable through at least one void area upon compression. In another embodiment still, at least one compressible member comprises a porous material. In another embodiment still, the inner diameter of the expanded portion of the second casing string is substantially equal to the smallest inner diameter portion of the first casing string. In another embodiment still, the second casing string has an earth removal member operatively attached to its lower end. In another embodiment still, the earth removal member of the second casing string comprises an expandable cutting structure. In another embodiment still, locating a portion of the second casing string adjacent to a portion of the first casing string comprises drilling through the first casing string with the second casing string. In another embodiment still, the earth removal member comprises a drillable material. In another embodiment still, the method includes setting the second casing string within the wellbore using a physically alterable bonding material. In another embodiment still, the portion of the first casing string with the enlarged inner diameter is an undercut

cementing shoe. In another embodiment still, the method includes locating a portion of a third casing string adjacent to a portion of the second casing string having an enlarged inner diameter and expanding the portion of the third casing string so that the portion of the third casing string has an inner diameter at least as large as the smallest inner diameter portion of the first casing string.

In another aspect, the present invention provides a method of forming a cased wellbore comprising drilling a wellbore using a first casing string having an earth removal member operatively connected to its lower end and at least one compressible member disposed around at least a portion of the first casing string; locating the first casing string within the wellbore; locating a portion of a second casing string adjacent to the at least one compressible member; and expanding the portion of the second casing string so that the portion of the second casing string has an inner diameter at least as large as a smallest inner diameter portion of the first casing string. In one embodiment, at least one compressible member is disposed at a lower end of the first casing string. In another embodiment, locating the portion of the second casing string adjacent to the at least one compressible member comprises drilling through the earth removal member. In another embodiment still, the second casing string comprises an earth removal member operatively connected to its lower end. In another embodiment still, the earth removal member of the second casing string is extendable to form an enlarged wellbore below the first casing string. In another embodiment still, the inner diameter of the expanded portion of the second casing string is substantially equal to the smallest inner diameter portion of the first casing string. In another embodiment still, the at least one compressible member comprises a plurality of webs moveable through at least one void area upon compression. In another embodiment still, the at least one compressible member comprises a porous material. In another embodiment still, the method includes setting the second casing string within the wellbore using a physically alterable bonding material. In another embodiment still, the second casing string has a at least one compressible member disposed on its lower end. In another embodiment still, the method includes locating a portion of a third casing string adjacent to the compressible member of the second casing string and expanding the portion of the third casing string so that the portion of the third casing string has an inner diameter at least as large as the smallest inner diameter portion of the first casing string.

In another aspect, the present invention provides an apparatus for use in forming a cased wellbore comprising a casing string, an earth removal member operatively attached to a lower end of the casing string, and at least one compressible member disposed at a lower end of the casing string. In one embodiment, the earth removal member comprises a drillable material. In another embodiment, at least one compressible member includes a compressible material having at least one void formed therein. In another embodiment still, at least one compressible member is disposed around an outer surface of the casing string. In another embodiment still, at least one compressible member is disposed within a portion of the casing string having an enlarged inner diameter. In another embodiment still, at least one compressible member comprises a porous material. In another embodiment still, at least one compressible member comprises a wall adjacent to the casing string and a plurality of compressible webs connecting the wall to the casing string. In another embodiment still, the plurality of compressible webs is moveable through a plurality of void areas between the plurality of webs.

In another embodiment, the present invention provides an apparatus for use in forming a cased wellbore comprising a casing string having an enlarged inner diameter portion; an earth removal member operatively connected to a lower end of the casing string; and a drillable portion disposed in the enlarged inner diameter portion. In one embodiment, the earth removal member comprises a drillable material. In another embodiment, the enlarged inner diameter portion is located at a lower end of the casing string. In another embodiment still, the drillable portion is constructed and arranged to become dislodged from the casing string when drilled with a second casing string having an outer diameter smaller than the enlarged inner diameter portion. In another embodiment still, the drillable portion is weakened by a plurality of voids formed therein. In another embodiment still, the plurality of voids formed in the drillable portion terminate at an inner surface of the enlarged inner diameter portion. In another embodiment still, at least a portion of the drillable portion includes a composite material.

In another embodiment, the present invention includes a method of forming a cased well, comprising lowering a first casing having an earth removal member operatively attached to its lower end into a formation to form a wellbore of a first depth; expanding at least a portion of the first casing into gripping engagement with the

wellbore to hang the first casing within the wellbore; leaving a fluid path between the first casing and the wellbore after expanding at least the portion of the first casing; flowing a fluid through the fluid path; and closing the fluid path. In one aspect, the method further comprises accomplishing the lowering, expanding, leaving, flowing, and closing in a single trip into the wellbore.

Another embodiment of the present invention includes a method of forming a cased well, comprising lowering a first casing having an earth removal member operatively attached to its lower end into a formation to form a wellbore of a first depth; expanding at least a portion of the first casing into gripping engagement with the wellbore to hang the first casing within the wellbore; leaving a fluid path between the first casing and the wellbore after expanding at least the portion of the first casing; flowing a fluid through the fluid path; and closing the fluid path, wherein closing the fluid path provides a seal between the first casing and the wellbore. Another embodiment of the present invention includes a method of forming a cased well, comprising lowering a first casing having an earth removal member operatively attached to its lower end into a formation to form a wellbore of a first depth; expanding at least a portion of the first casing into gripping engagement with the wellbore to hang the first casing within the wellbore; leaving a fluid path between the first casing and the wellbore after expanding at least the portion of the first casing; flowing a fluid through the fluid path; and closing the fluid path, wherein the fluid is setting fluid. In one embodiment, the setting fluid is cement.

Another embodiment of the present invention includes a method of forming a cased well, comprising lowering a first casing having an earth removal member operatively attached to its lower end into a formation to form a wellbore of a first depth; expanding at least a portion of the first casing into gripping engagement with the wellbore to hang the first casing within the wellbore; leaving a fluid path between the first casing and the wellbore after expanding at least the portion of the first casing; flowing a fluid through the fluid path; and closing the fluid path, wherein the at least a portion of the first casing is profiled and the fluid path comprises one or more fluid bypass areas formed in the profiled portion of the first casing. Another embodiment of the present invention includes a method of forming a cased well, comprising lowering a first casing having an earth removal member operatively attached to its lower end into a

formation to form a wellbore of a first depth; expanding at least a portion of the first casing into gripping engagement with the wellbore to hang the first casing within the wellbore; leaving a fluid path between the first casing and the wellbore after expanding at least the portion of the first casing; flowing a fluid through the fluid path; and closing the fluid path, wherein the fluid path comprises one or more openings in the first casing to allow the setting fluid to flow into an annulus between the first casing and the wellbore. Another embodiment of the present invention includes a method of forming a cased well, comprising lowering a first casing having an earth removal member operatively attached to its lower end into a formation to form a wellbore of a first depth; expanding at least a portion of the first casing into gripping engagement with the wellbore to hang the first casing within the wellbore; leaving a fluid path between the first casing and the wellbore after expanding at least the portion of the first casing; flowing a fluid through the fluid path; closing the fluid path; and expanding at least a portion of an unexpanded portion of the first casing.

Another embodiment of the present invention includes a method of forming a cased well, comprising lowering a first casing having an earth removal member operatively attached to its lower end into a formation to form a wellbore of a first depth; expanding at least a portion of the first casing into gripping engagement with the wellbore to hang the first casing within the wellbore; leaving a fluid path between the first casing and the wellbore after expanding at least the portion of the first casing; flowing a fluid through the fluid path; and closing the fluid path, wherein a lower end of the first casing is expanded further radially than a remaining portion of the first casing. In one aspect, the first casing is bell-shaped. Another embodiment of the present invention includes a method of forming a cased well, comprising lowering a first casing having an earth removal member operatively attached to its lower end into a formation to form a wellbore of a first depth; expanding at least a portion of the first casing into gripping engagement with the wellbore to hang the first casing within the wellbore; leaving a fluid path between the first casing and the wellbore after expanding at least the portion of the first casing; flowing a fluid through the fluid path; closing the fluid path; and lowering a second casing having an earth removal member operatively attached to its lower end into the formation to form a wellbore of a second depth. In one embodiment, the method further comprises expanding at least a portion of the

second casing into gripping engagement with the wellbore to hang the second casing within the wellbore. In another embodiment, the method further comprises leaving a second fluid path between the second casing and the wellbore after expanding at least the portion of the second casing; flowing a setting fluid through the second fluid path; and closing the second fluid path.

In another embodiment, the present invention includes a method of forming a cased well, comprising lowering a first casing having an earth removal member operatively attached to its lower end into a formation to form a wellbore of a first depth; expanding at least a portion of the first casing into gripping engagement with the wellbore to hang the first casing within the wellbore; leaving a fluid path between the first casing and the wellbore after expanding at least the portion of the first casing; flowing a fluid through the fluid path; and closing the fluid path, wherein closing the fluid path comprises expanding the fluid path into the wellbore. In another embodiment, the present invention includes a method of forming a cased well, comprising lowering a first casing having an earth removal member operatively attached to its lower end into a formation to form a wellbore of a first depth; expanding at least a portion of the first casing into gripping engagement with the wellbore to hang the first casing within the wellbore; leaving a fluid path between the first casing and the wellbore after expanding at least the portion of the first casing; flowing a fluid through the fluid path; closing the fluid path, wherein a lower end of the first casing is expanded further radially than a remaining portion of the first casing; and lowering a second casing into the wellbore to a second depth and expanding the second casing into the first casing to form a substantially monobore well. In another embodiment, the present invention includes a method of forming a cased well, comprising lowering a first casing having an earth removal member operatively attached to its lower end into a formation to form a wellbore of a first depth; expanding at least a portion of the first casing into gripping engagement with the wellbore to hang the first casing within the wellbore; leaving a fluid path between the first casing and the wellbore after expanding at least the portion of the first casing; flowing a fluid through the fluid path; closing the fluid path; and rotating the first casing while lowering the first casing into the formation.

Another embodiment of the present invention includes a method of casing a wellbore, comprising lowering a first casing having an earth removal member

operatively attached to its lower end into a formation to form a wellbore, the first casing having at least one bypass for circulating a fluid formed therein; expanding at least a portion of the first casing into frictional engagement with the wellbore to hang the first casing within the wellbore; circulating the fluid through the at least one bypass; and expanding the first casing to close the bypass. In one embodiment, a running string comprising a setting tool therein is disposed within the first casing to hang the first casing within the wellbore. In another embodiment, the running string further comprises an expander tool to close the bypass.

Another embodiment of the present invention includes a method of casing a wellbore, comprising lowering a first casing having an earth removal member operatively attached to its lower end into a formation to form a wellbore, the first casing having at least one bypass for circulating a fluid formed therein; expanding at least a portion of the first casing into frictional engagement with the wellbore to hang the first casing within the wellbore; circulating the fluid through the at least one bypass; and expanding the first casing to close the bypass, wherein a lower end of the first casing is expanded to a larger inner diameter than a remaining portion of the first casing. In one embodiment, the method further comprises lowering a second casing having an earth removal member operatively attached to its lower end into the formation to form the wellbore. In another embodiment, the method further comprises expanding the second casing into the first casing to form a substantially monobore well.

Another embodiment of the present invention includes an apparatus for use in drilling with casing, comprising a tubular string having a casing portion, an earth removal member operatively attached to its lower end, and at least one fluid bypass area located thereon; and an expansion tool disposed within the tubular string, the expansion tool capable of expanding a portion of the tubular string into a surrounding wellbore while leaving a flow path around an outer diameter of the tubular string to a surface of the wellbore. In one aspect, the at least one fluid bypass area comprises at least one longitudinal profile in the tubular string. In another aspect, the at least one fluid bypass area comprises at least one opening in the tubular string.

While the foregoing is directed to embodiments of the present invention, other and further embodiments of the invention may be devised without departing from the basic scope thereof, and the scope thereof is determined by the claims that follow.

Allowed claims:

1. An assembly for forming a cased well, comprising:

an undercut drillable cementing shoe with a casing string connection at a first end, wherein the shoe includes

an external tubing that forms a second end of the shoe and has a first section defining an enlarged inner diameter relative to a second section of the external tubing; and

a valve that controls flow of fluid through the shoe;

an earth removal member coupled to the second end of the shoe, wherein the first section of the external tubing is disposed between the earth removal member and the second section of the external tubing; and

a tubular member disposed within the external tubing and lining the first section, wherein an annular area between the external tubing and the tubular member is filled with an aggregate material, and wherein at least a portion of the tubular member extends below the valve.

2. The assembly of claim 1, wherein the aggregate material comprises sand.

3. The assembly of claim 1, wherein the earth removal member comprises a drillable bit.

4. The assembly of claim 1, wherein the earth removal member comprises a retrievable bit.

5. An assembly for forming a cased well, comprising:

a casing string, wherein a first portion of the casing string has a larger inner diameter than a second portion of the casing string;

an earth removal member coupled to an end of the casing string, wherein the first portion of the casing string is disposed between the earth removal member and the second portion of the casing string;

a tubular member disposed within the casing string and lining the first portion, wherein an annular area between the casing string and the tubular member is filled with an aggregate material; and

a valve disposed in the casing string and located above the tubular member.

6. The assembly of claim 5, wherein the casing string is cemented in a wellbore.

7. The assembly of claim 5, wherein the earth removal member comprises a drill bit.

8. The assembly of claim 5, wherein the tubular member is disposed concentrically within the first portion of the casing string to define a temporary flow path through the casing string.

9. The assembly of claim 5, wherein the tubular member is disposed concentrically within the first portion of the casing string between the valve and the earth removal member.

10. The assembly of claim 5, wherein the valve is cemented in the casing string, and wherein the tubular member extends from the valve to the end of the casing to define a flow path from the valve to the earth removal member.

11. The assembly of claim 5, wherein the tubular member and earth removal member are drillable from the casing string while downhole.

12. The assembly of claim 5, wherein the tubular member and earth removal member are drillable from the casing string while downhole to thereby leave the first portion as a terminus of the casing string in the cased well.

13. An assembly for forming a cased well, comprising:

a casing string formed of sections of tubing that define a longitudinal bore with an inner diameter, wherein the inner diameter of the longitudinal bore is enlarged adjacent an end of the casing string;

a tubular member lining the longitudinal bore of the casing string along where the inner diameter is enlarged, wherein an annular area between the sections of tubing and the tubular member is filled with an aggregate material to support the tubular member;

a valve disposed in the casing string and located above the tubular member; and

an earth removal member coupled to the end of the casing string.

14. The assembly of claim 13, wherein the tubular member is removable downhole.

15. The assembly of claim 13, wherein the valve controls flow of fluid through the tubular member.

16. The assembly of claim 13, further comprising a bonding material disposed around the casing string.

17. The assembly of claim 13, wherein the tubular member is disposed concentrically within the casing string to define a temporary flow path through the casing string.

18. The assembly of claim 1, wherein the tubular member is disposed concentrically within the external tubing to define a temporary flow path through the external tubing.

19. The assembly of claim 1, wherein the tubular member extends from the valve to the second end of the shoe to define a flow path from the valve to the earth removal member.

20. The assembly of claim 1, wherein the tubular member and the earth removal member are drillable from the external tubing while downhole.

21. An assembly for forming a cased well, comprising:

a casing string, wherein a first portion of the casing string has a larger inner diameter than a second portion of the casing string;

a drillable portion coupled to an inner surface of the first portion of the casing;

an earth removal member coupled to an outer surface of the drillable portion, wherein the first portion of the casing string is disposed between the drillable portion and the second portion of the casing string;

a tubular member disposed within the casing string and lining the first portion, wherein an annular area between the casing string and the tubular member is filled with an aggregate material; and

a valve disposed in the casing string and located above the tubular member.

22. The assembly of claim 21, wherein the casing string is cemented in a wellbore.

23. The assembly of claim 21, wherein the earth removal member comprises a drill bit.

24. The assembly of claim 21, wherein the tubular member is disposed concentrically within the first portion of the casing string to define a temporary flow path through the casing string.

25. The assembly of claim 21, wherein the tubular member is disposed concentrically within the first portion of the casing string between the valve and the earth removal member.

26. The assembly of claim 21, wherein the valve is cemented in the casing string, and wherein the tubular member extends from the valve to the end of the casing to define a flow path from the valve to the earth removal member.

27. The assembly of claim 21, wherein the tubular member and earth removal member are drillable from the casing string while downhole.

28. The assembly of claim 21, wherein the tubular member and earth removal member are drillable from the casing string while downhole to thereby leave the first portion as a terminus of the casing string in the cased well.

29. An assembly for forming a cased well, comprising:

an external tubular having a lower section defining an enlarged inner diameter relative to an upper section of the external tubular;

an internal tubular disposed within the external tubular, wherein a first annular area between the external tubular and the internal tubular is filled with a first aggregate material;

a valve that controls fluid flow through the internal tubular, wherein a second annular area between the external tubular and the internal tubular is filled with a second aggregate material;

a drillable portion connected to an inner surface of the lower section of the external tubular, the drillable portion having an outer diameter substantially equal to the outer diameter of the external tubular and an inner diameter substantially equal to the inner diameter of the internal tubular; and

an earth removal member connected to an outer surface of the drillable portion.

30. The assembly of claim 29, wherein the earth removal member includes an inner diameter greater than the inner diameter of the drillable portion.

31. The assembly of claim 29, wherein a lower end of the drillable portion is disposed within the earth removal member.

32. The assembly of claim 29, wherein the internal tubular is disposed concentrically within the external tubular and the drillable portion.

33. The assembly of claim 29, wherein the internal tubular, the drillable portion, and the earth removal member are in fluid communication.

34. The assembly of claim 29, wherein the first aggregate material includes sand and the second aggregate material includes cement.

35. The assembly of claim 29, wherein the earth removal member includes at least one of a drillable bit and a retrievable bit.

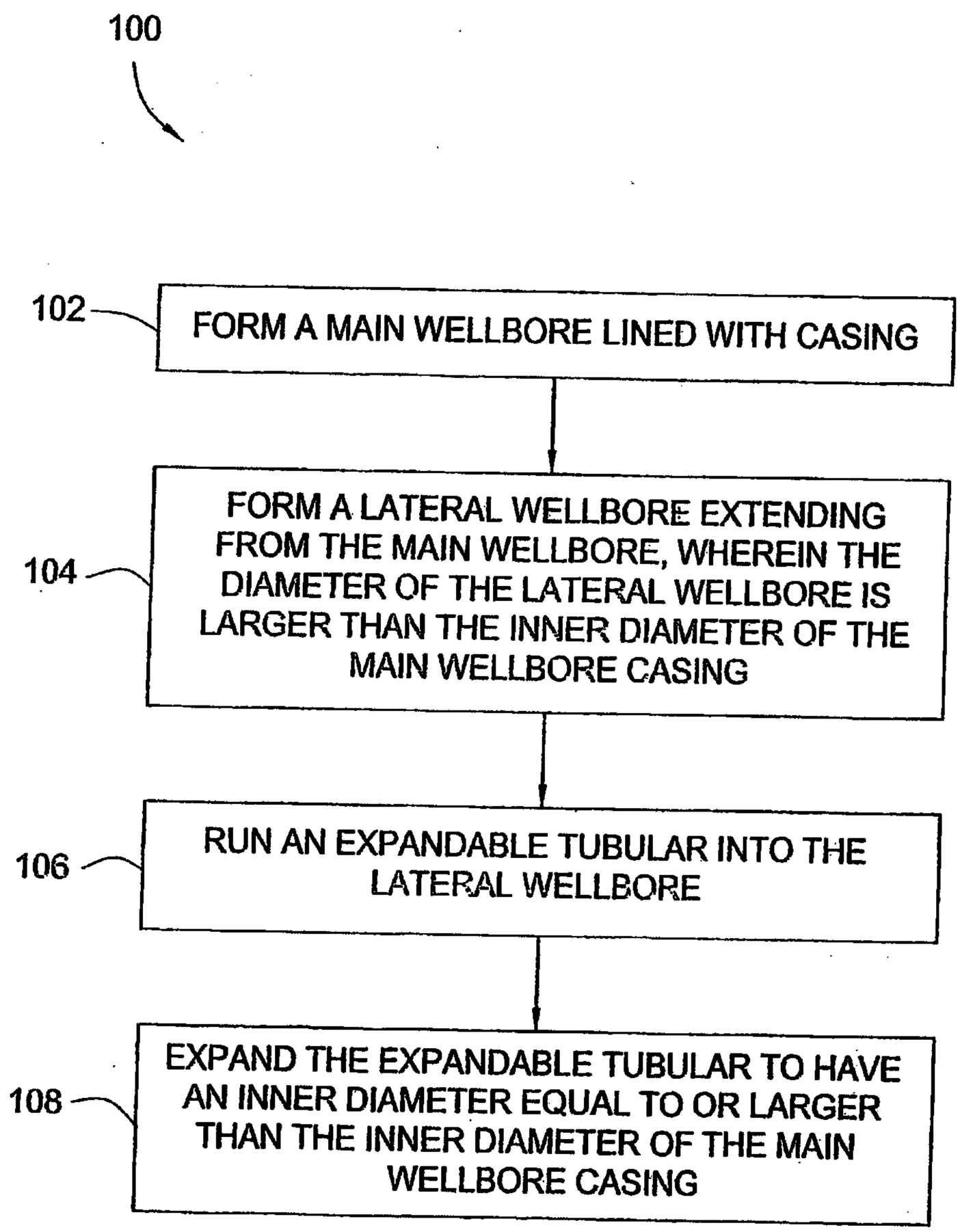
100
102
FORM A MAIN WELLBORE LINED WITH CASING
104
FORM A LATERAL WELLBORE EXTENDING FROM THE MAIN WELLBORE, WHEREIN THE DIAMETER OF THE LATERAL WELLBORE IS LARGER THAN THE INNER DIAMETER OF THE MAIN WELLBORE CASING
106
RUN AN EXPANDABLE TUBULAR INTO THE LATERAL WELLBORE
108
EXPAND THE EXPANDABLE TUBULAR TO HAVE AN INNER DIAMETER EQUAL TO OR LARGER THAN THE INNER DIAMETER OF THE MAIN WELLBORE CASING

FIG. 1

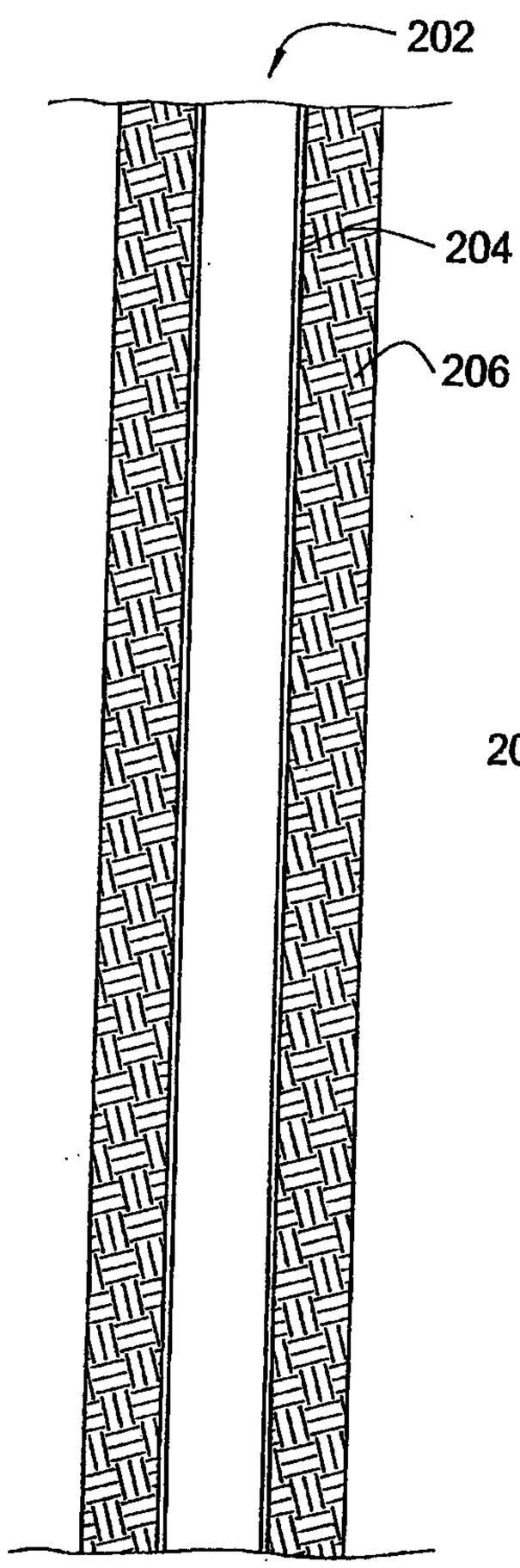

FIG. 2A

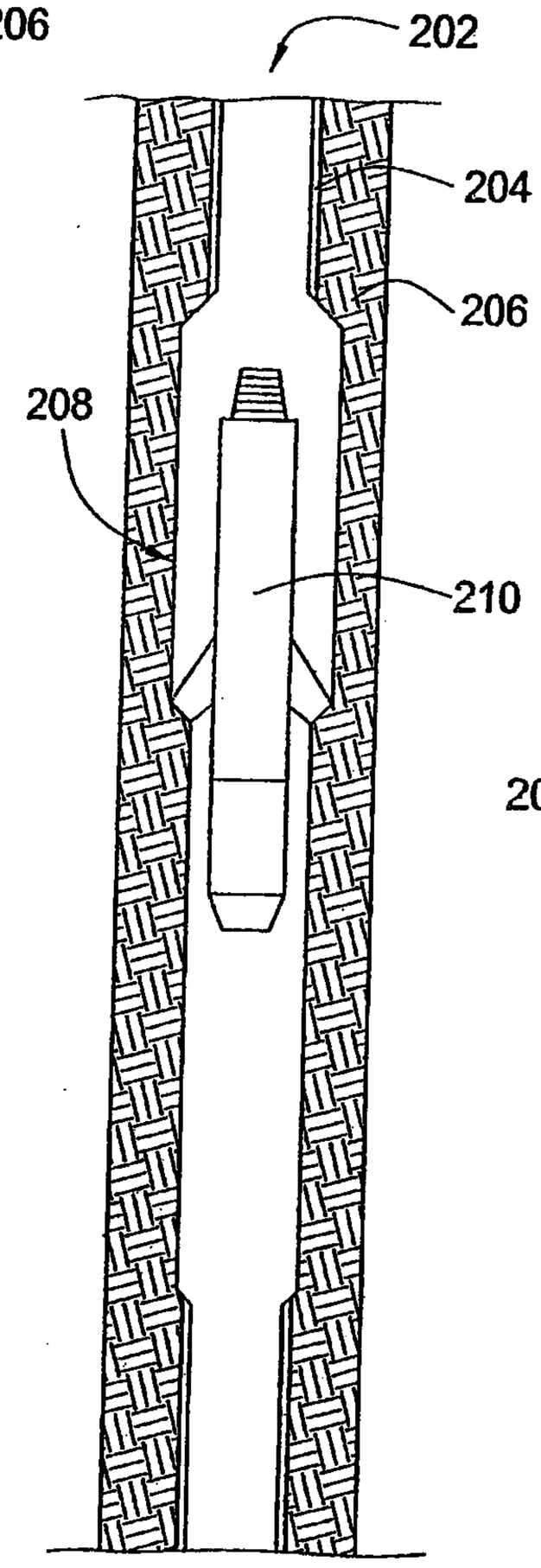

FIG. 2B

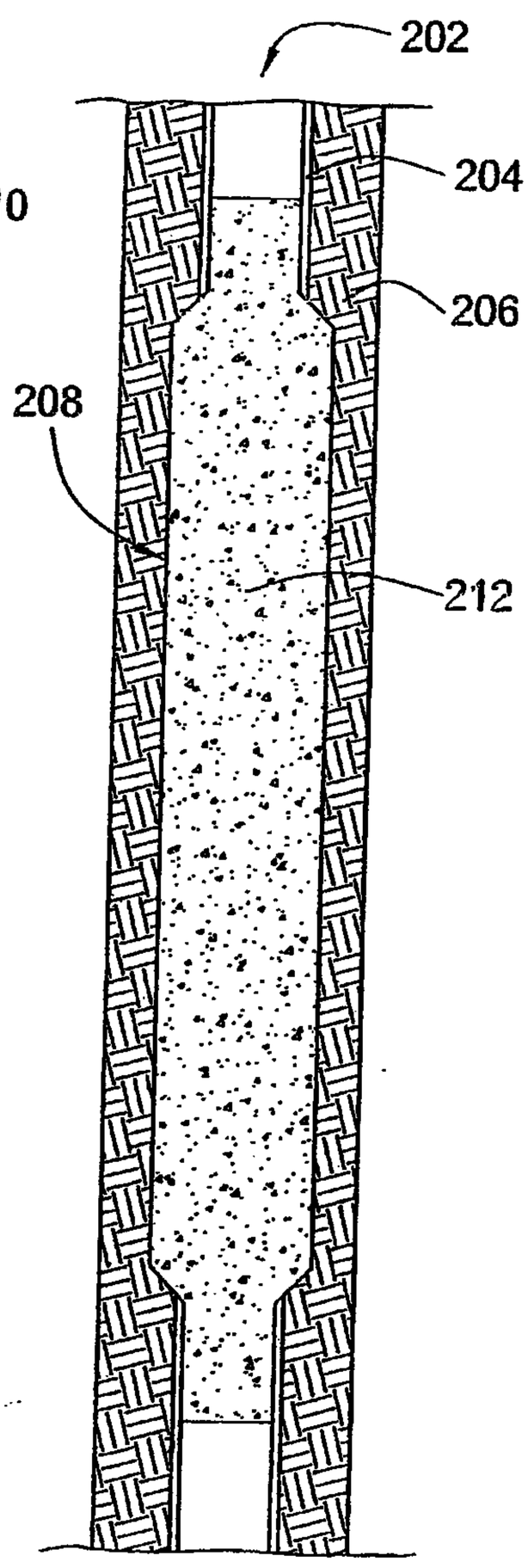

FIG. 2C

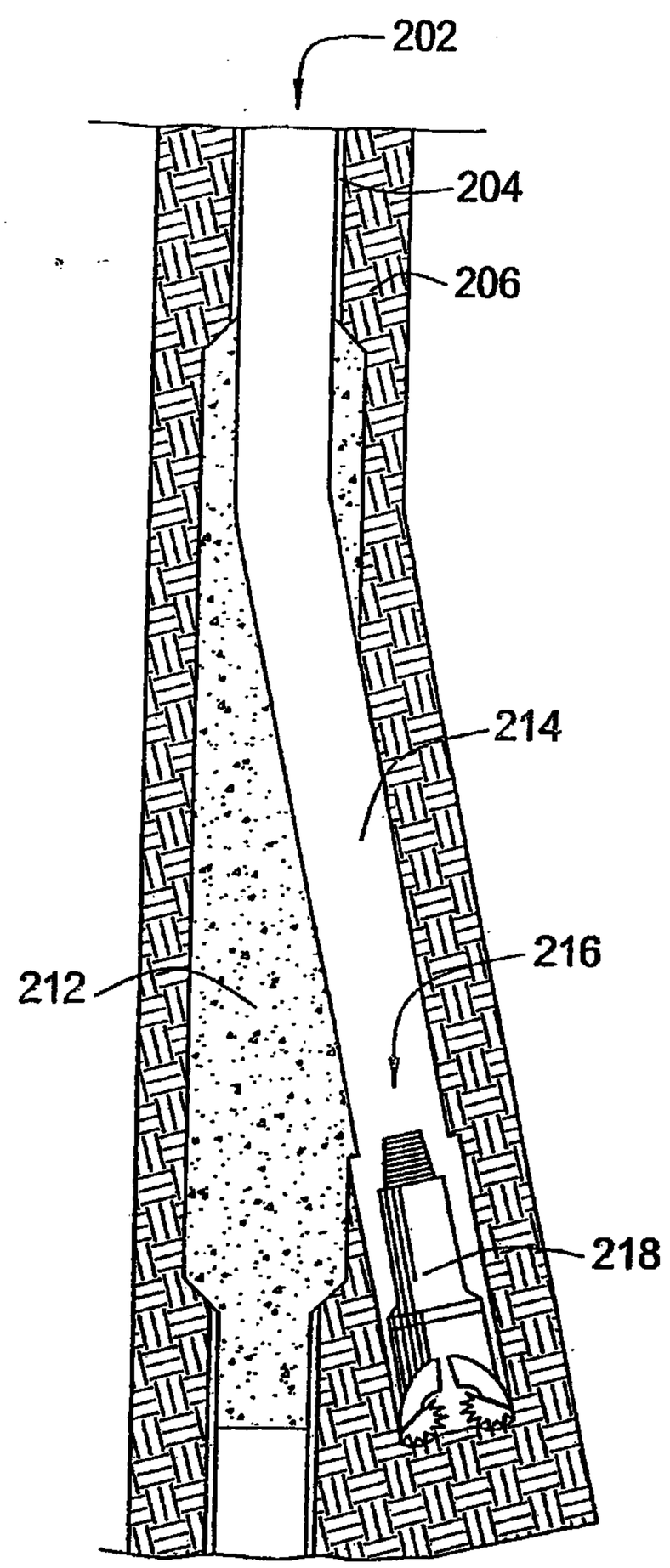
202
204
206
214
216
212
218

FIG. 2D

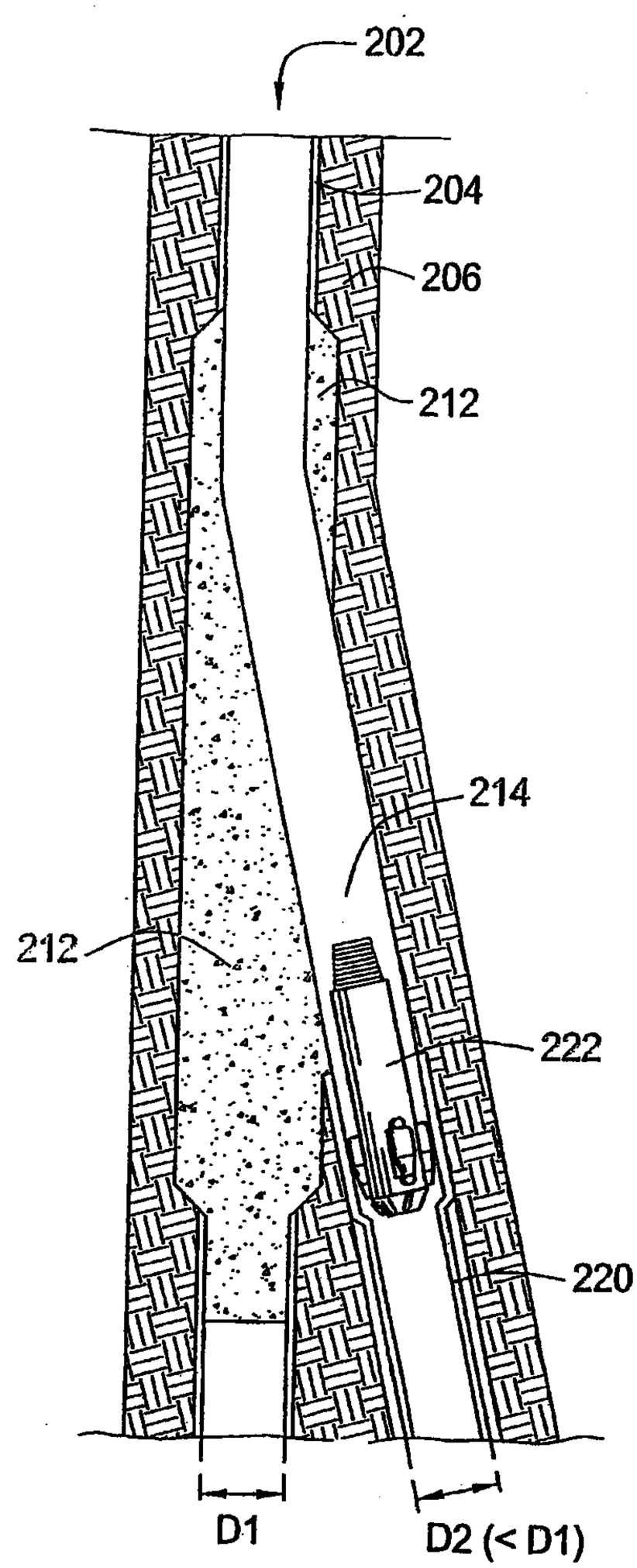
202
204
206
212
214
212
222
220
D1
D2 (< D1)

FIG. 2E

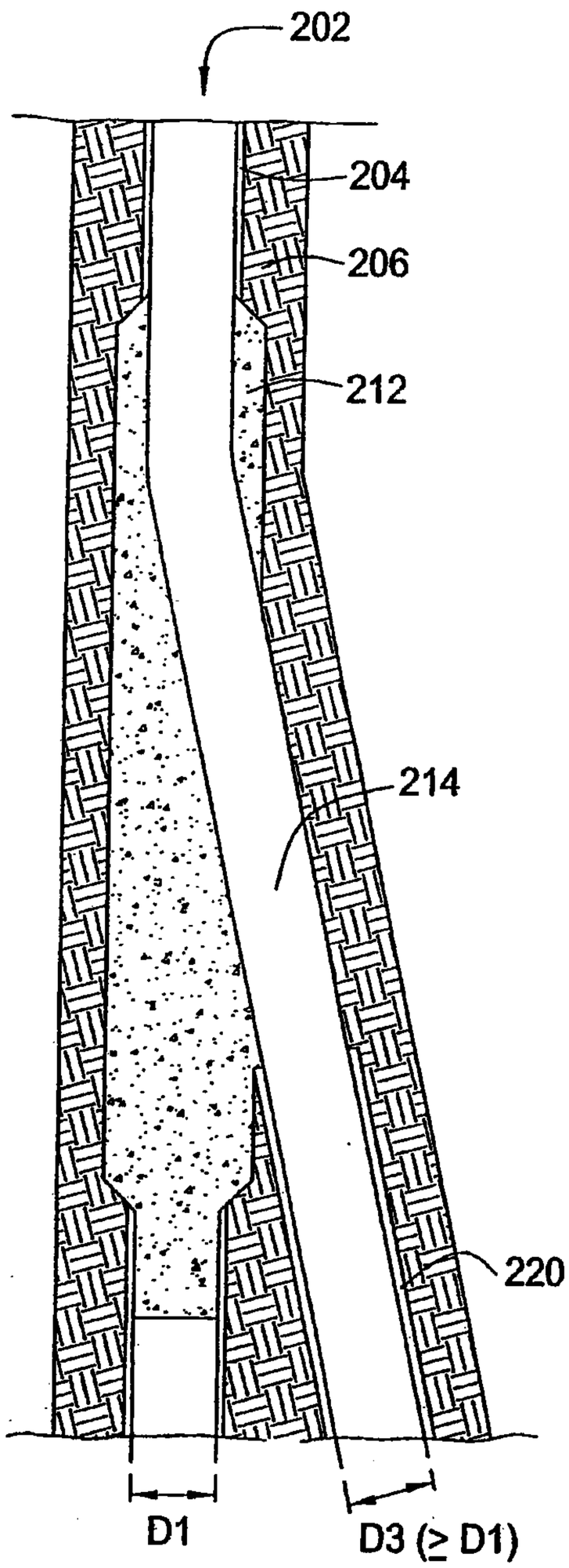

FIG. 2F

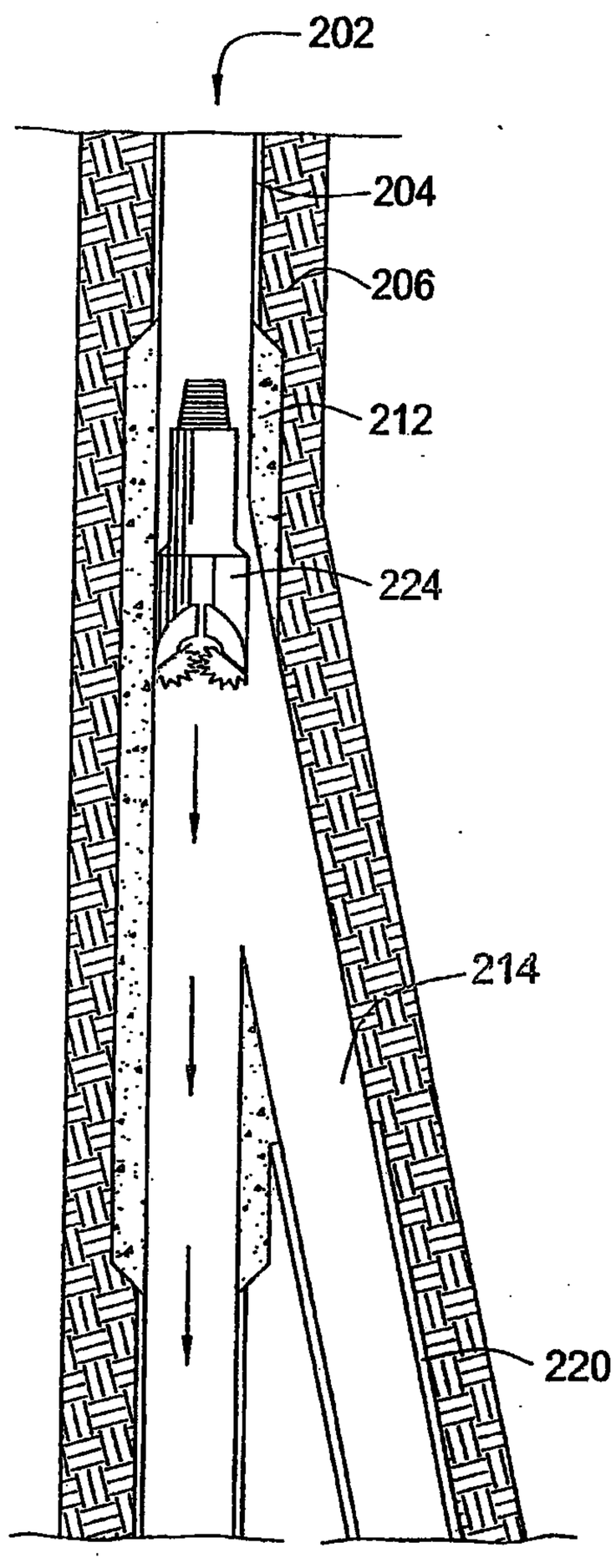

FIG. 2G

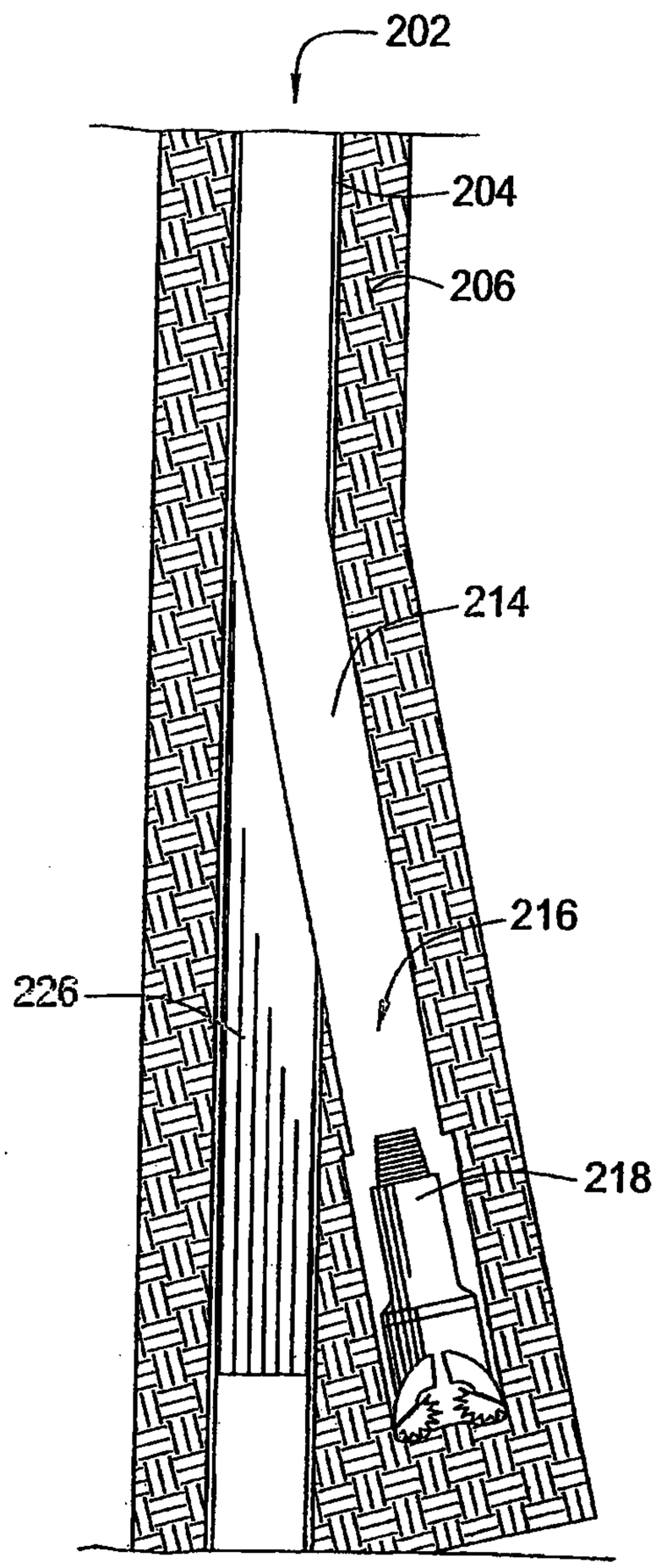

FIG. 3A

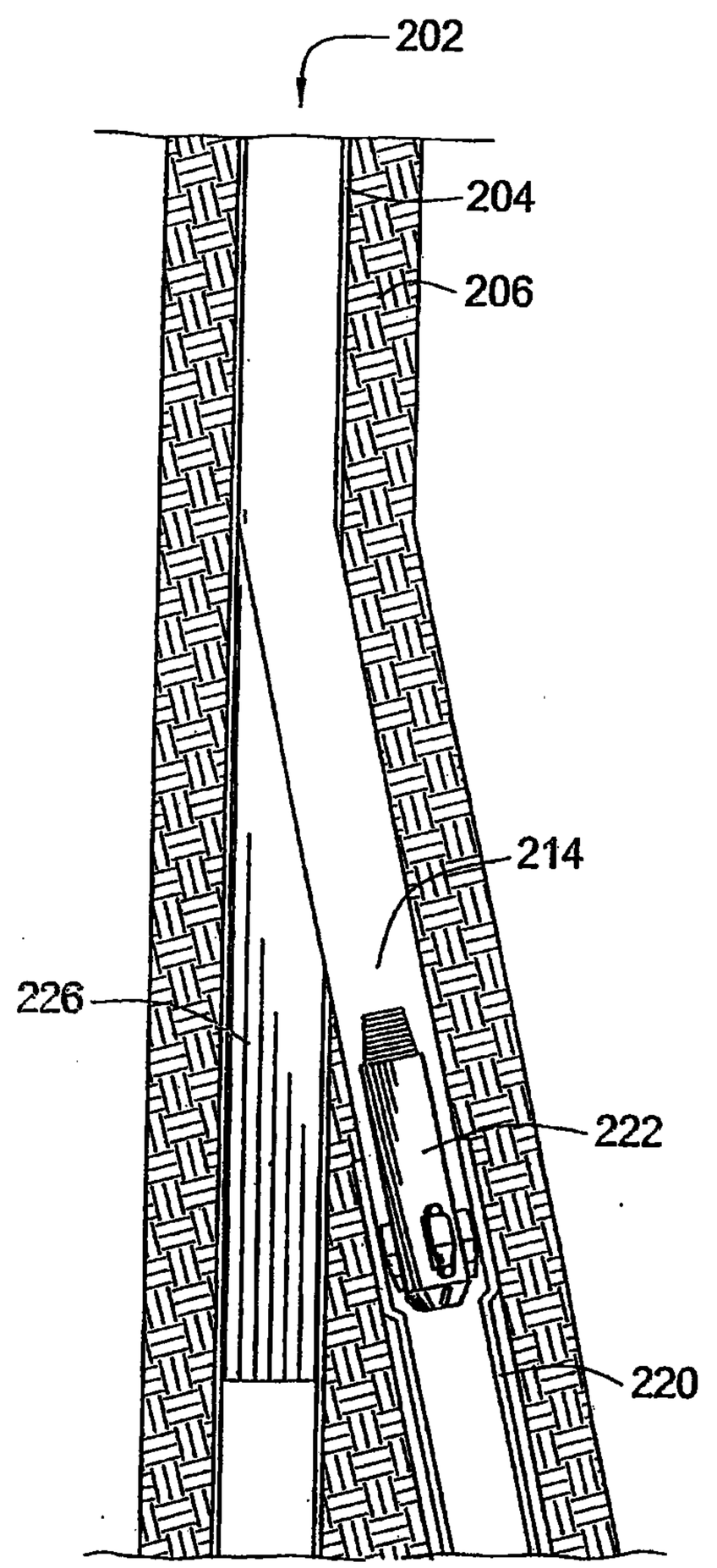

FIG. 3B

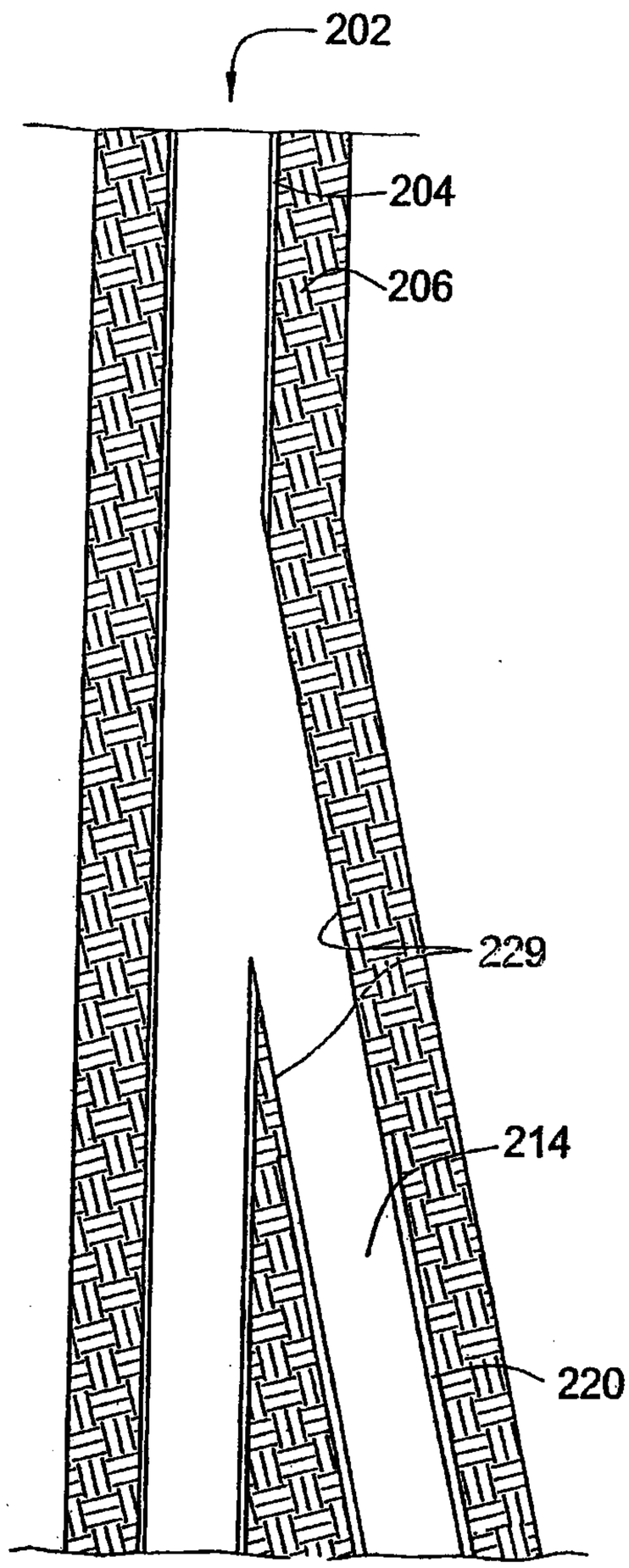

FIG. 3C

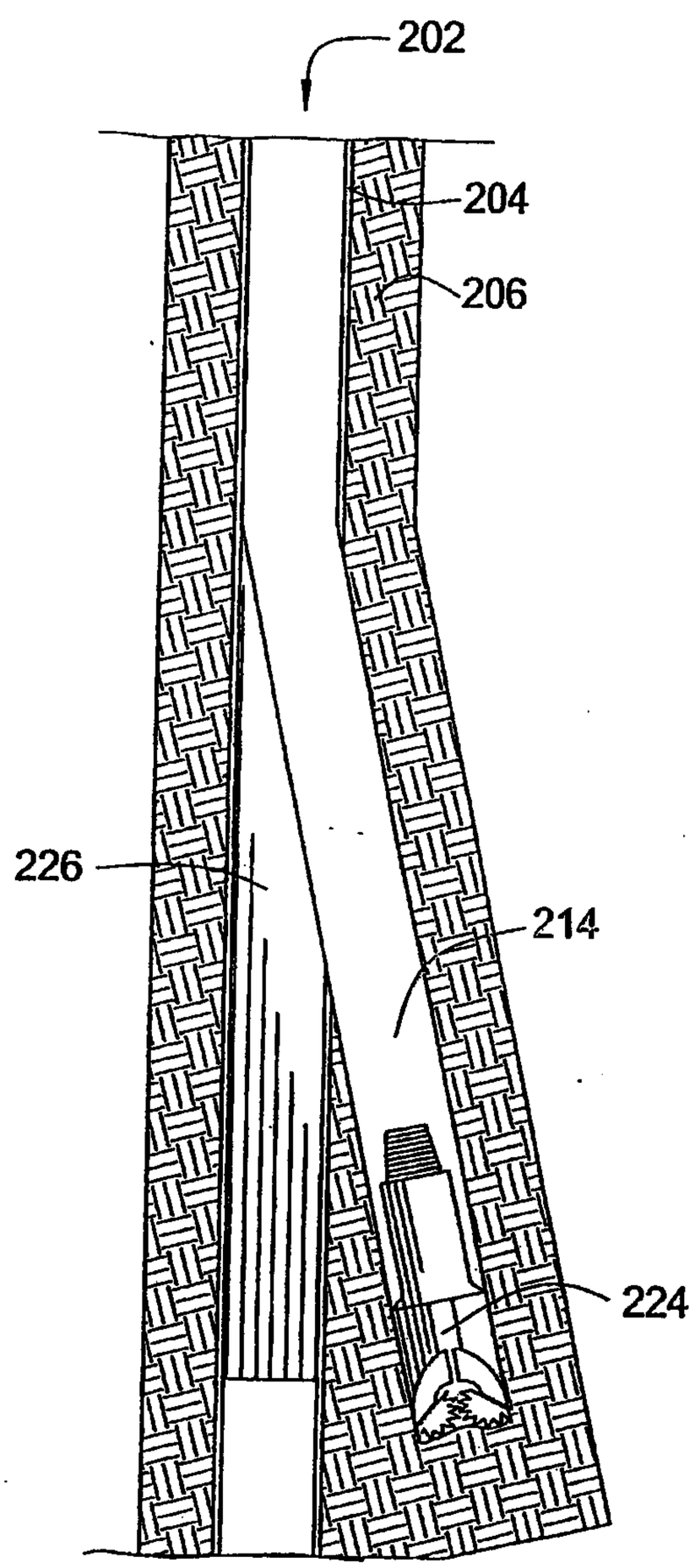

FIG. 4A

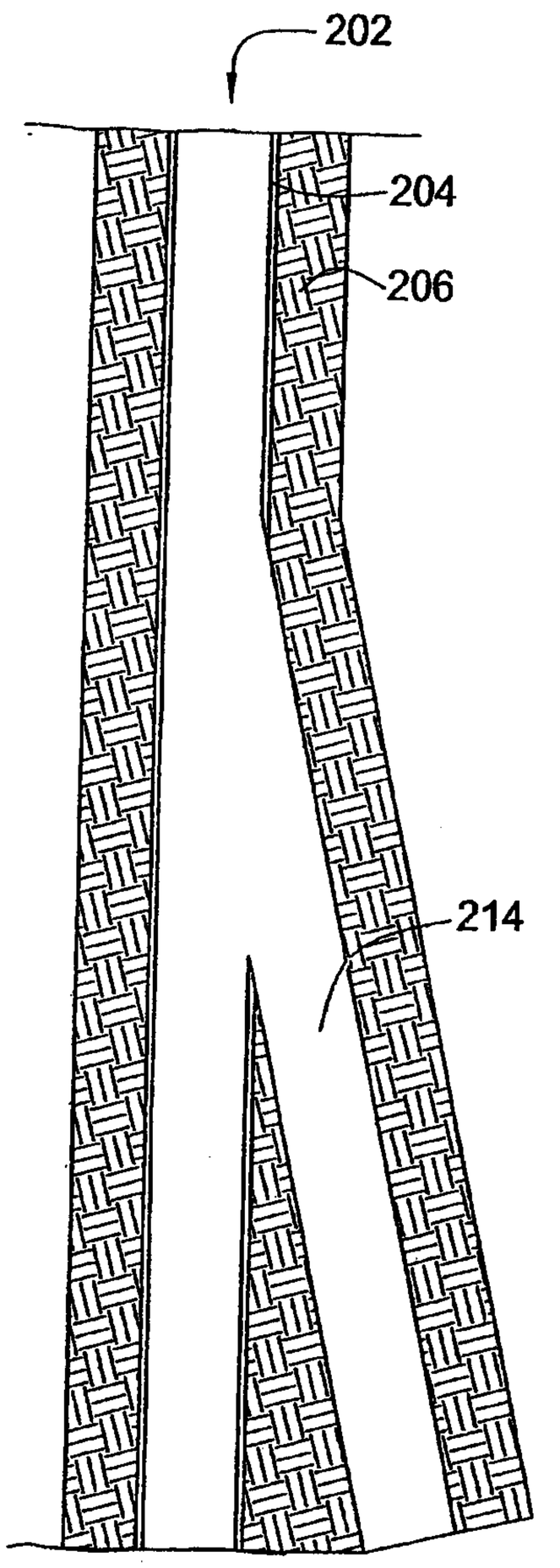

FIG. 4B

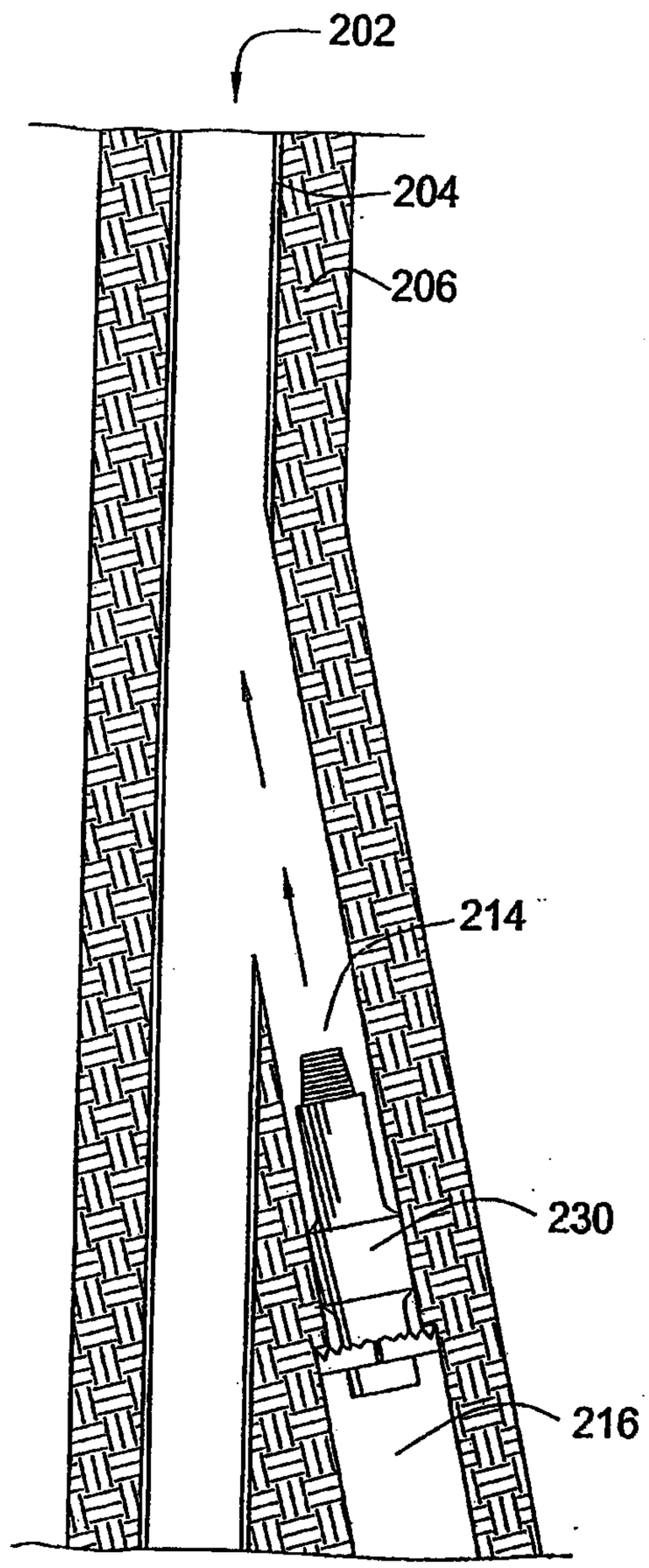

FIG. 4C

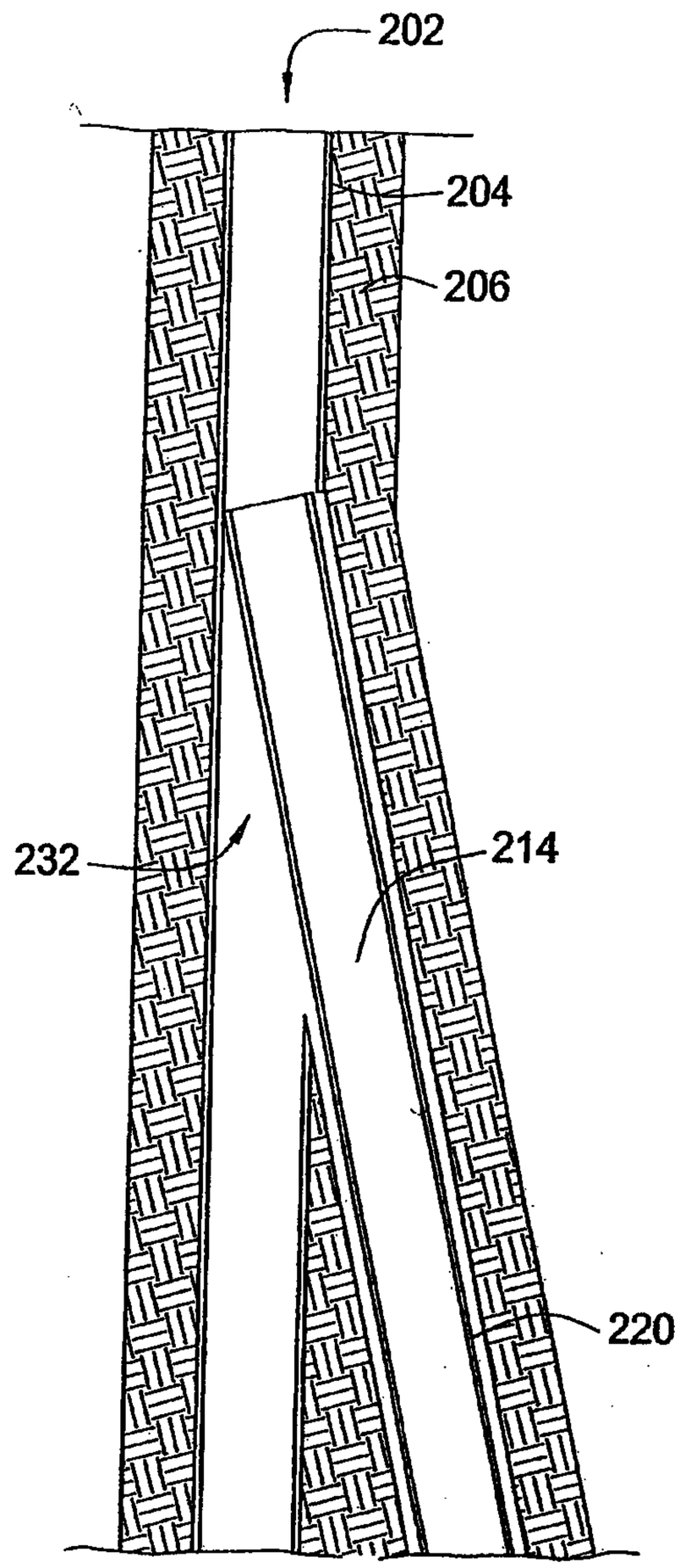

FIG. 4D

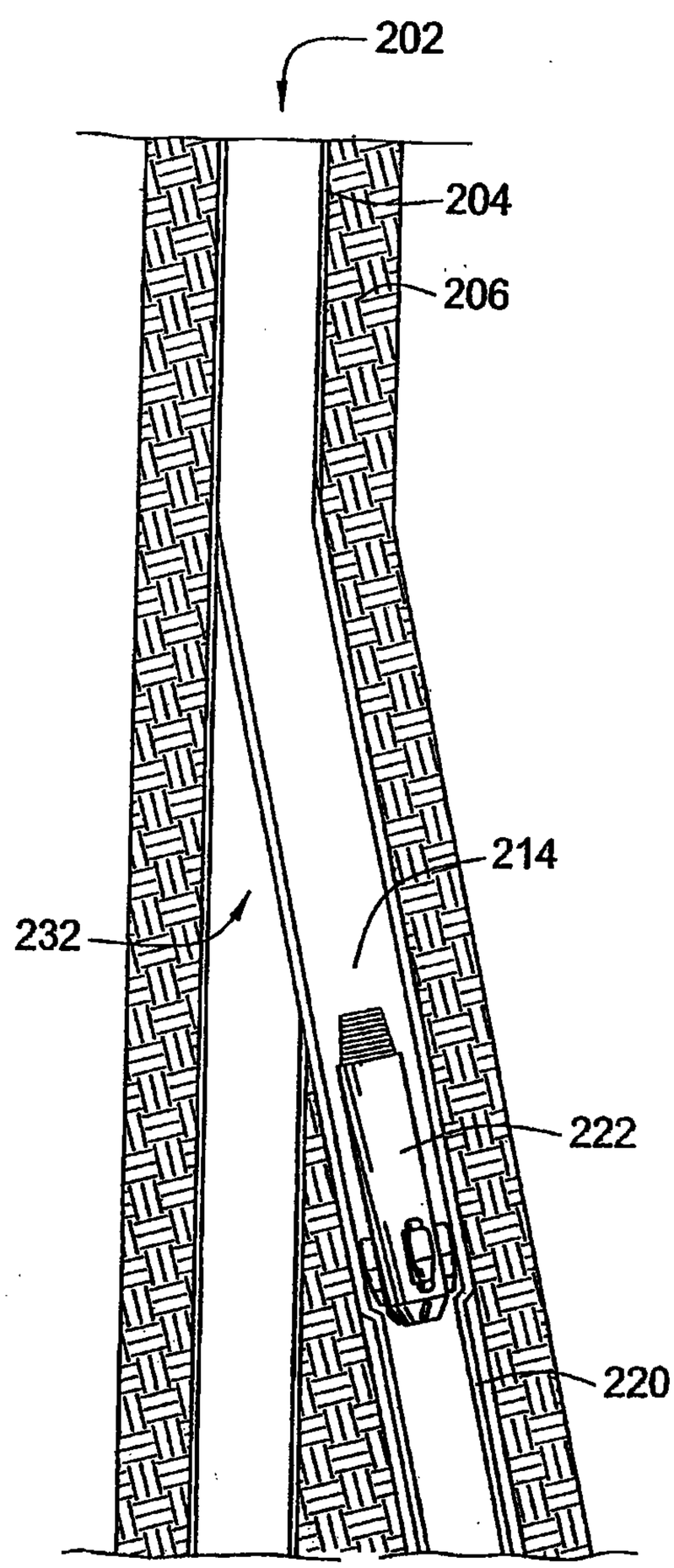

FIG. 4E

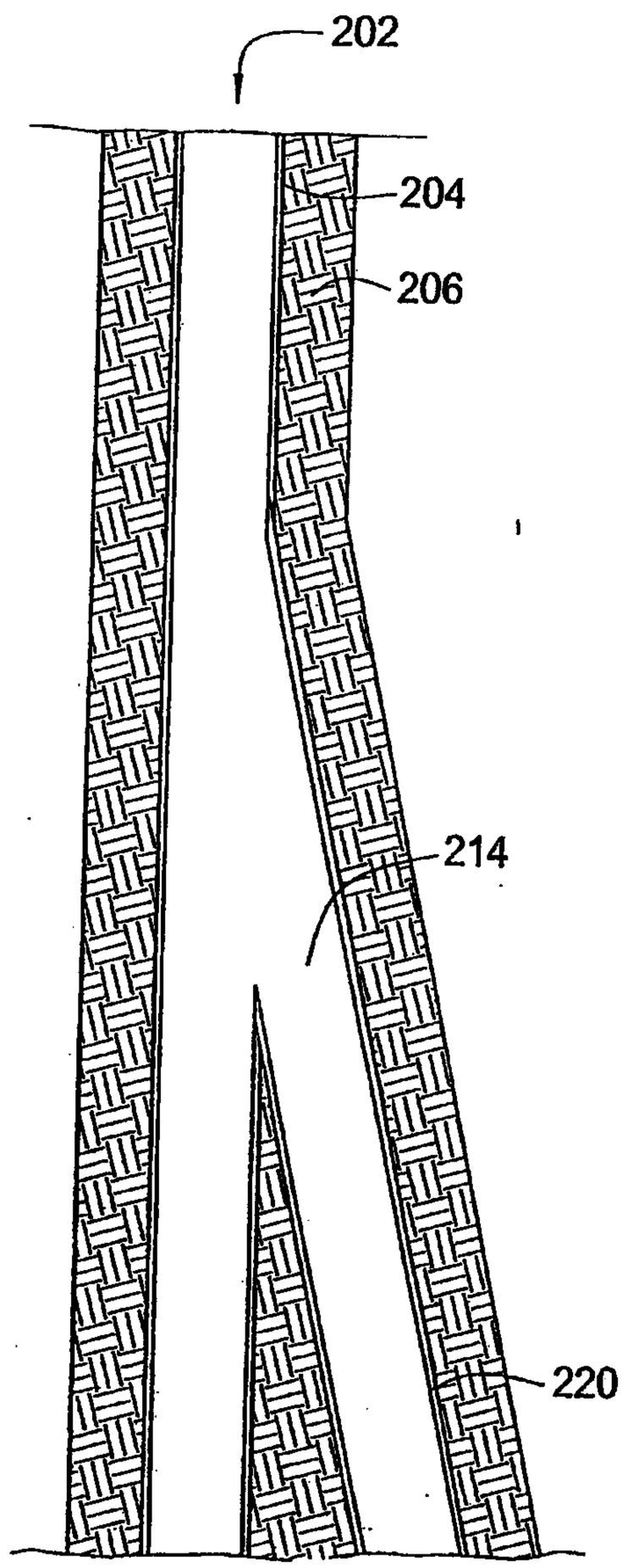

FIG. 4F

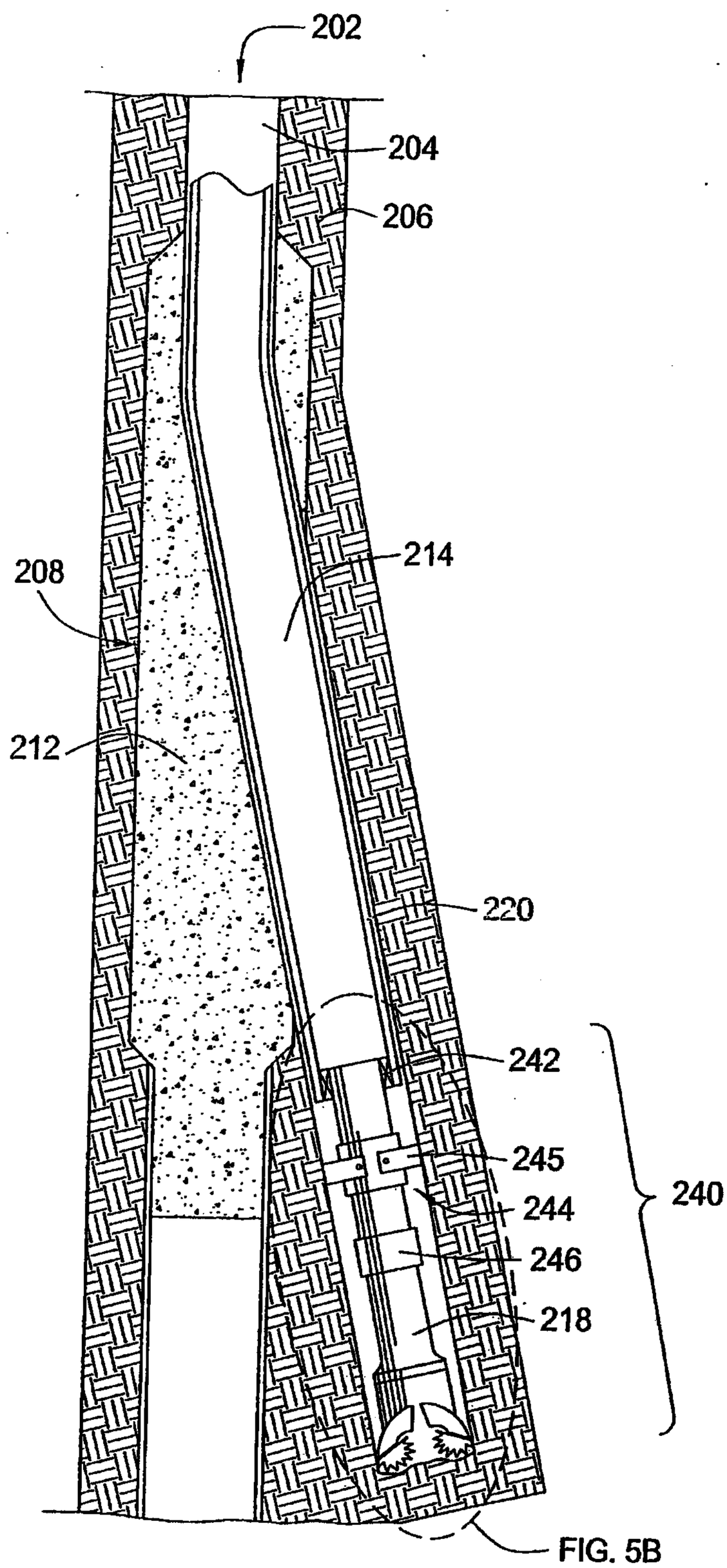

FIG. 5A

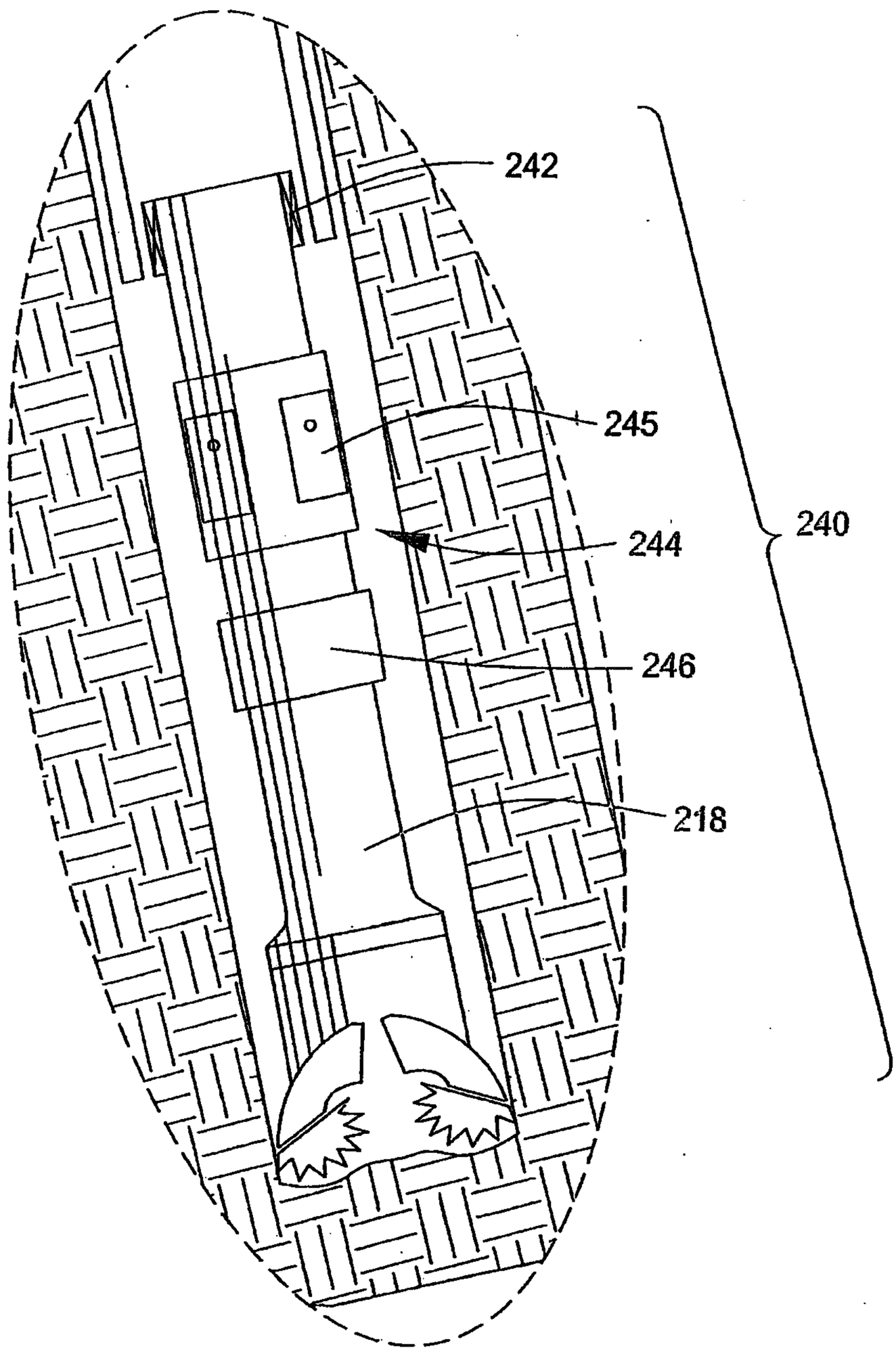

FIG. 5B

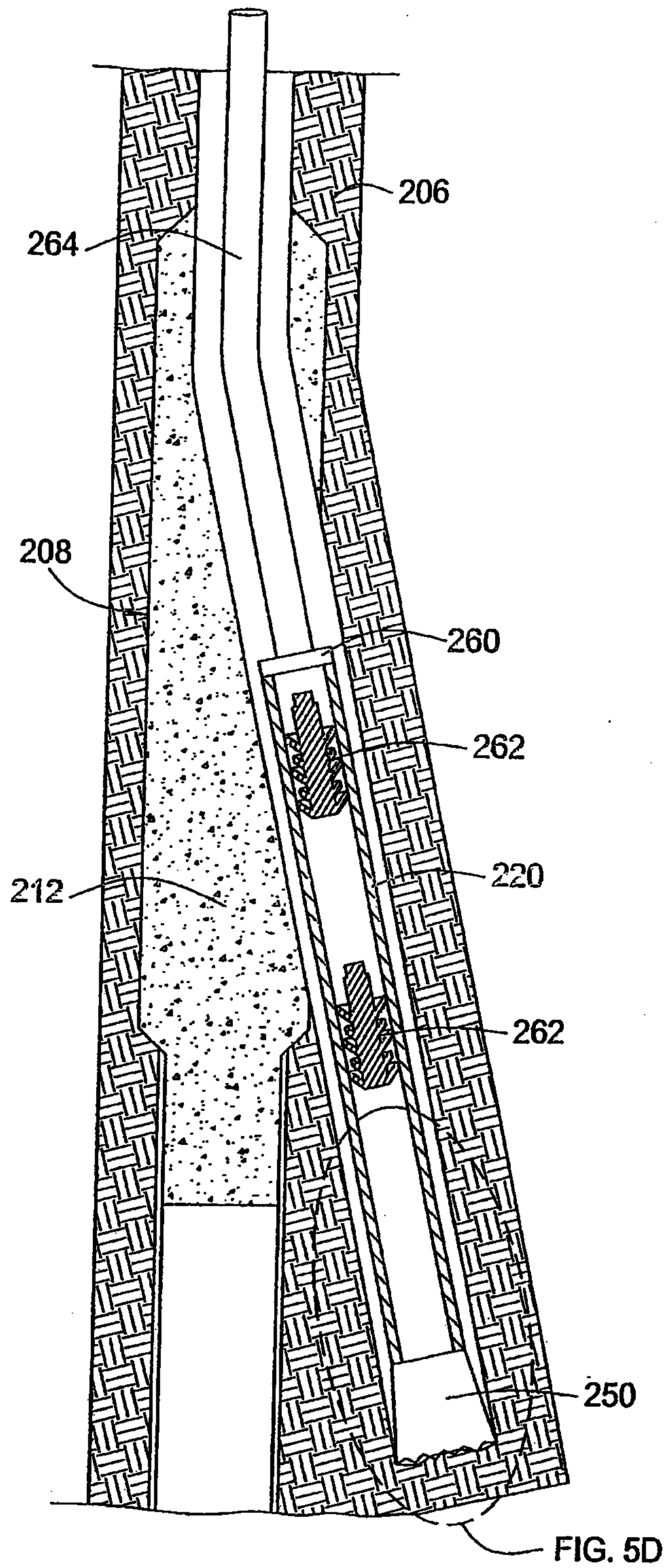

FIG. 5C

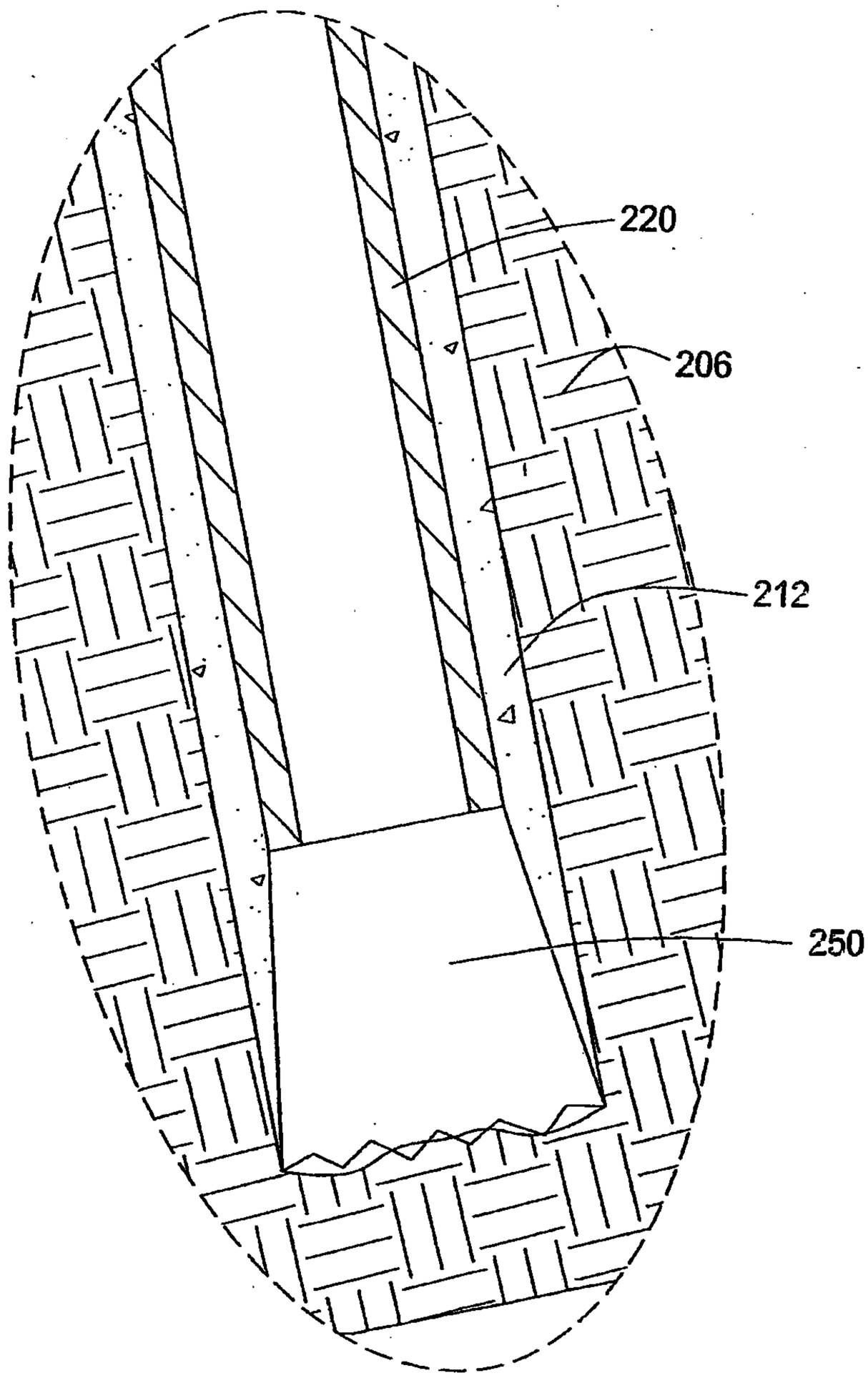

FIG. 5D

FIG. 6

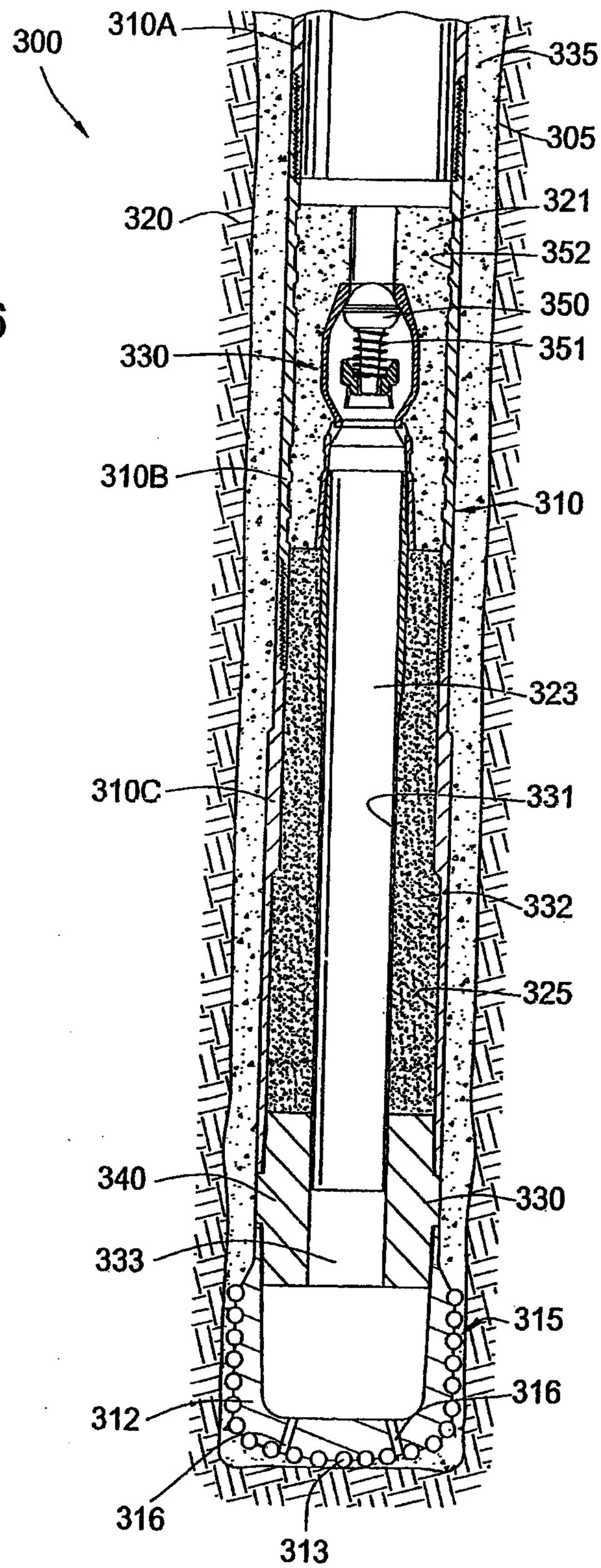
300
310A
335
305
320
321
352
350
330
351
310B
310
323
310C
331
332
325
340
330
333
315
316
312
316
313

FIG. 7

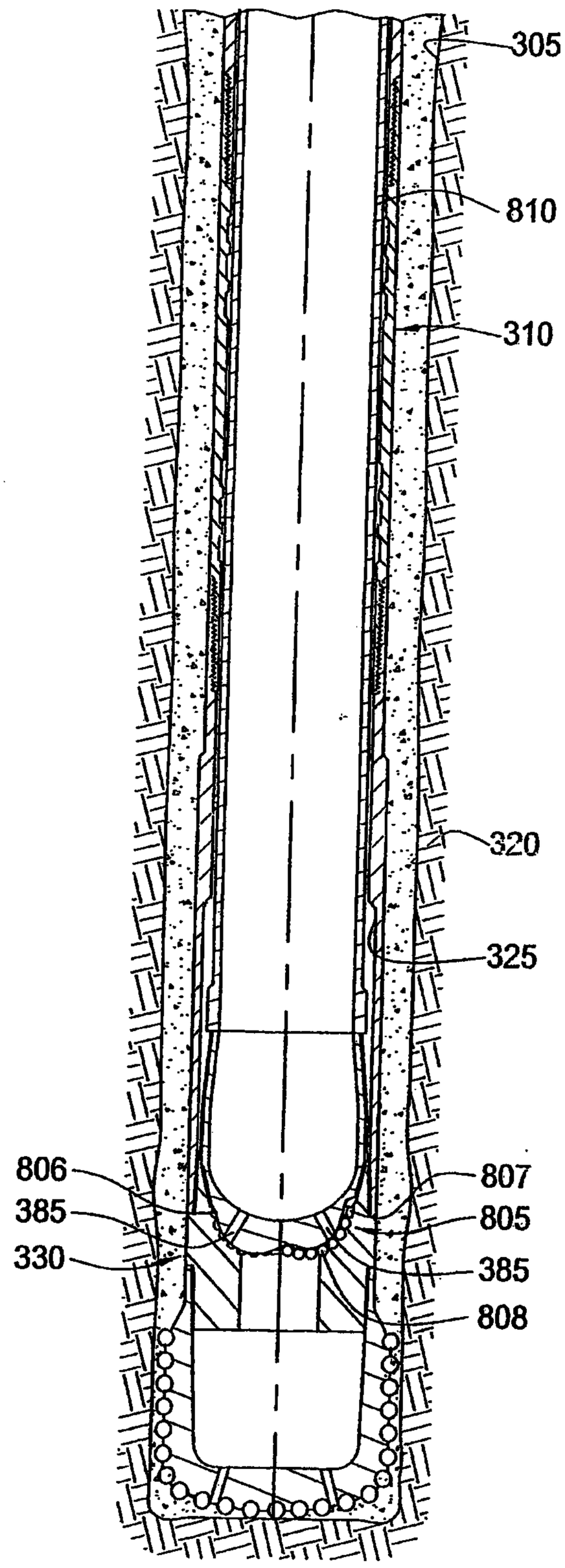

FIG. 8

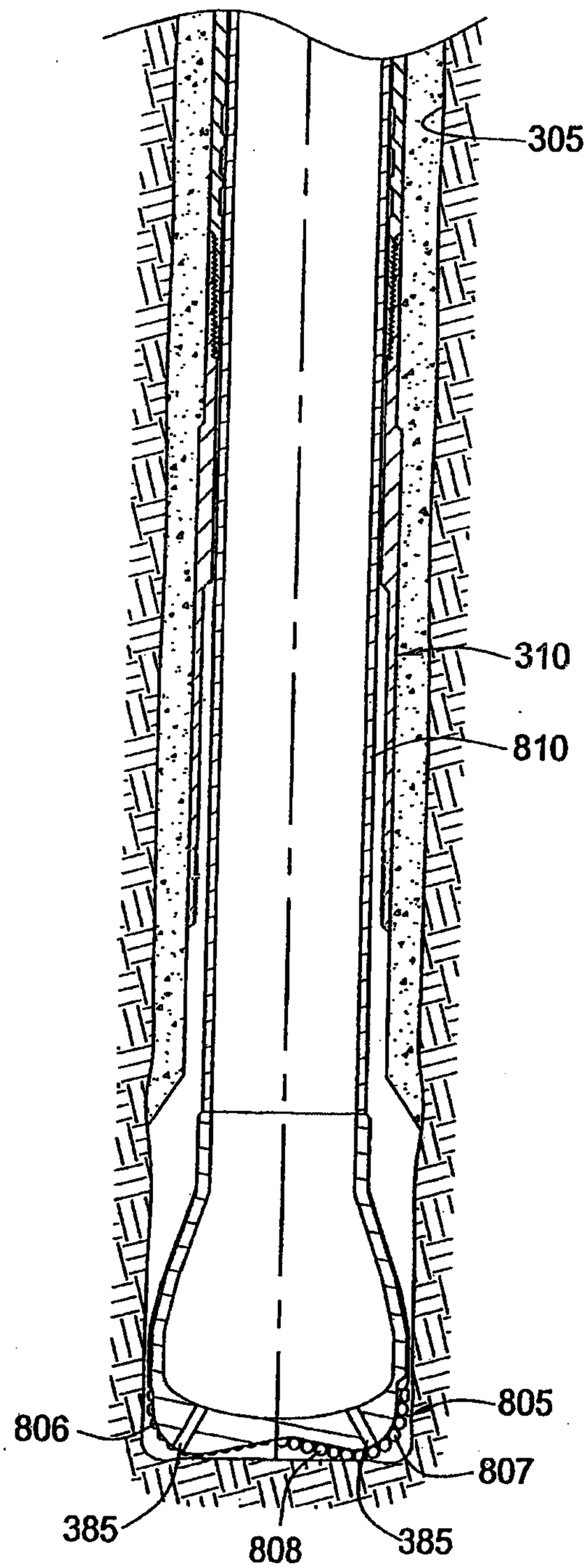

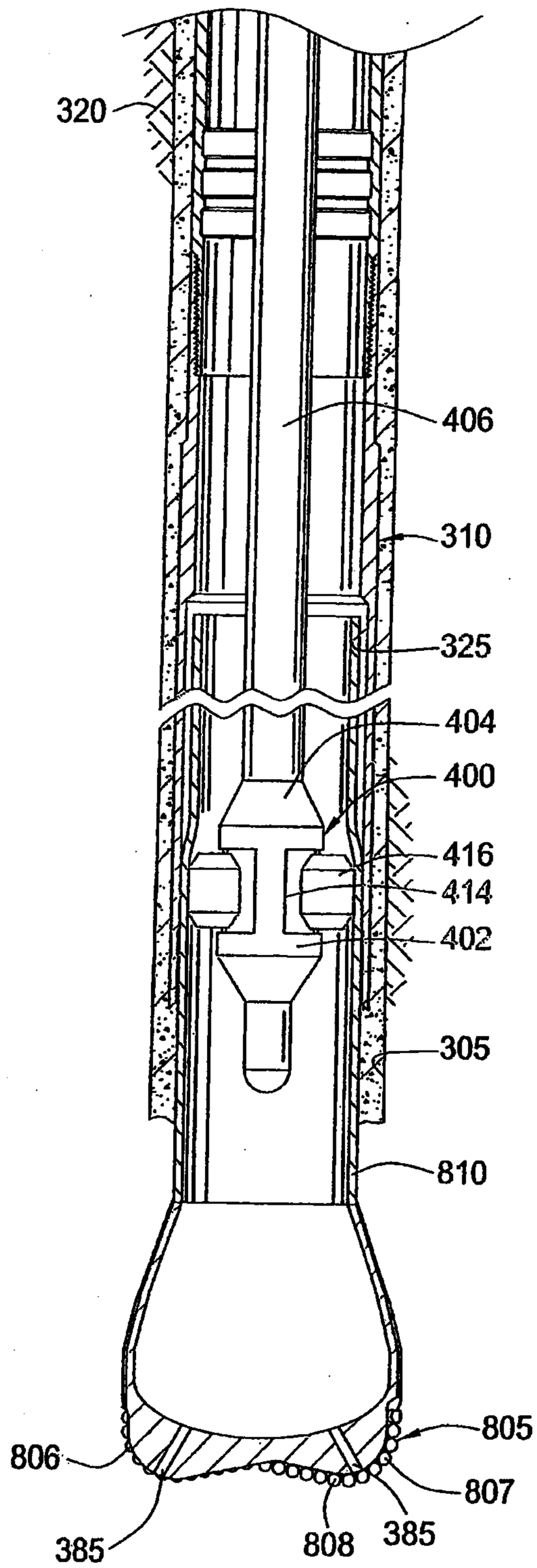
320
406
310
325
404
400
416
414
402
305
810
805
806
807
385
808
385

FIG. 9

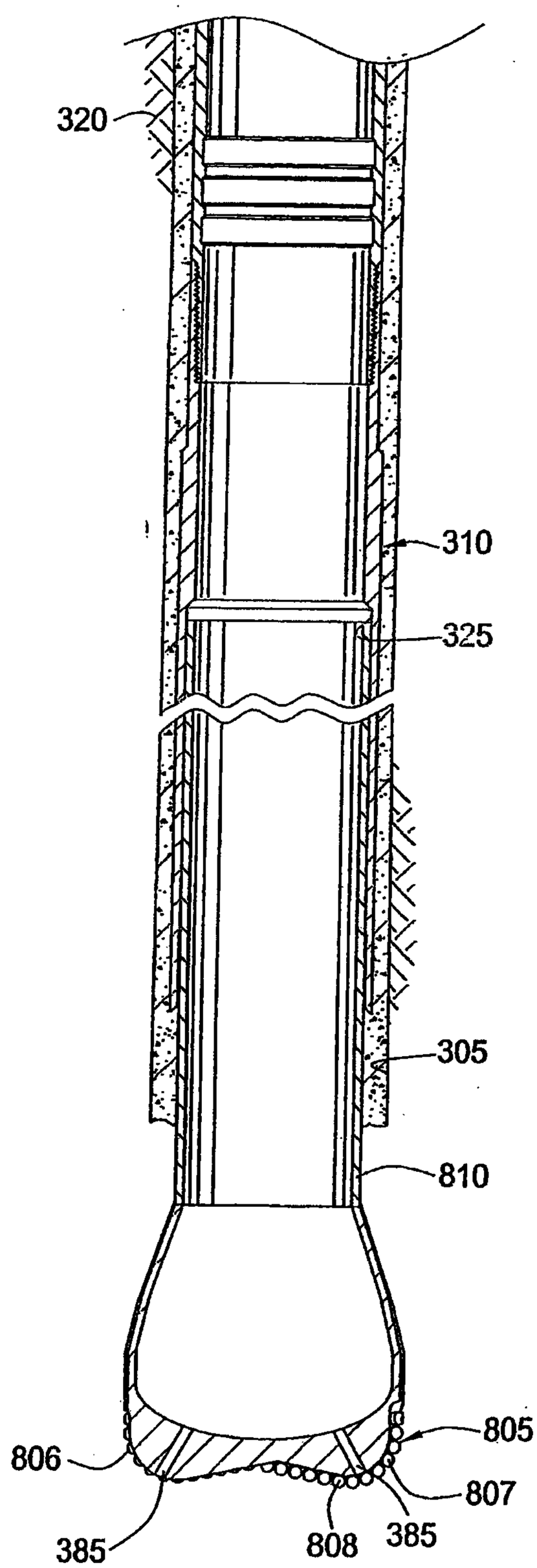
320
310
325
305
810
805
806
807
385
808
385

FIG. 10

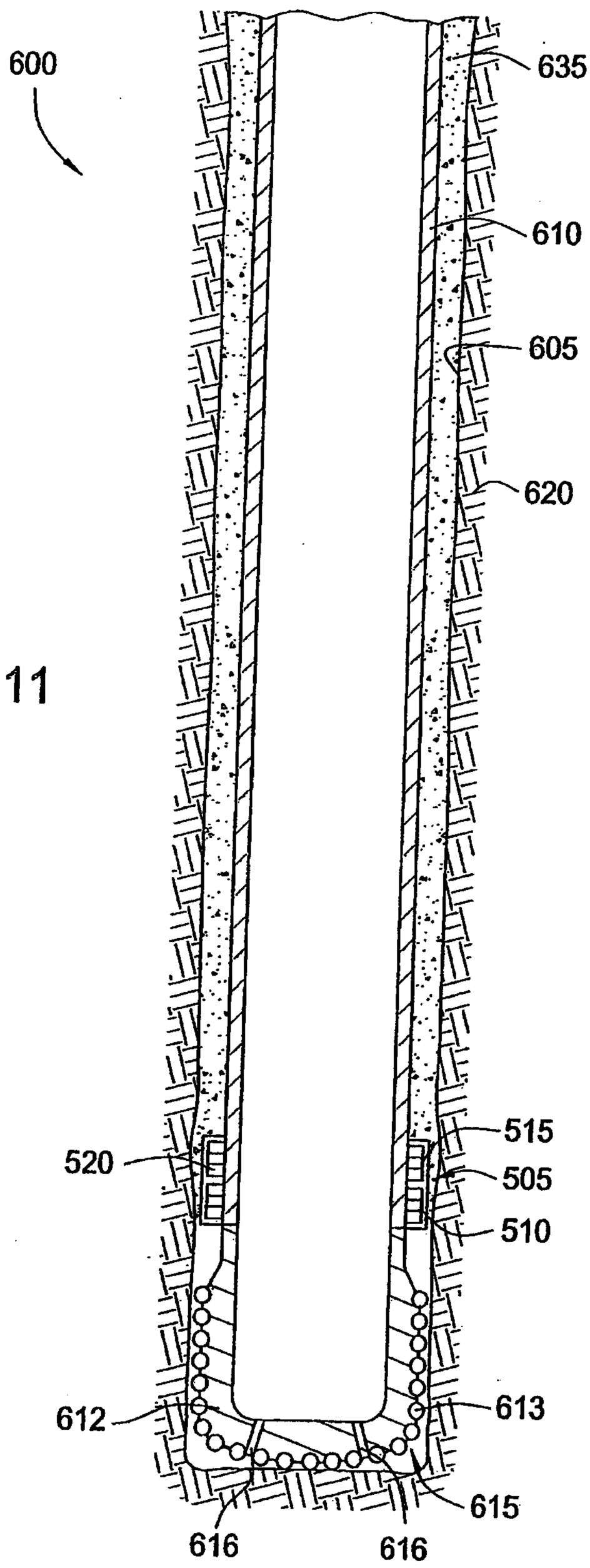

FIG. 11

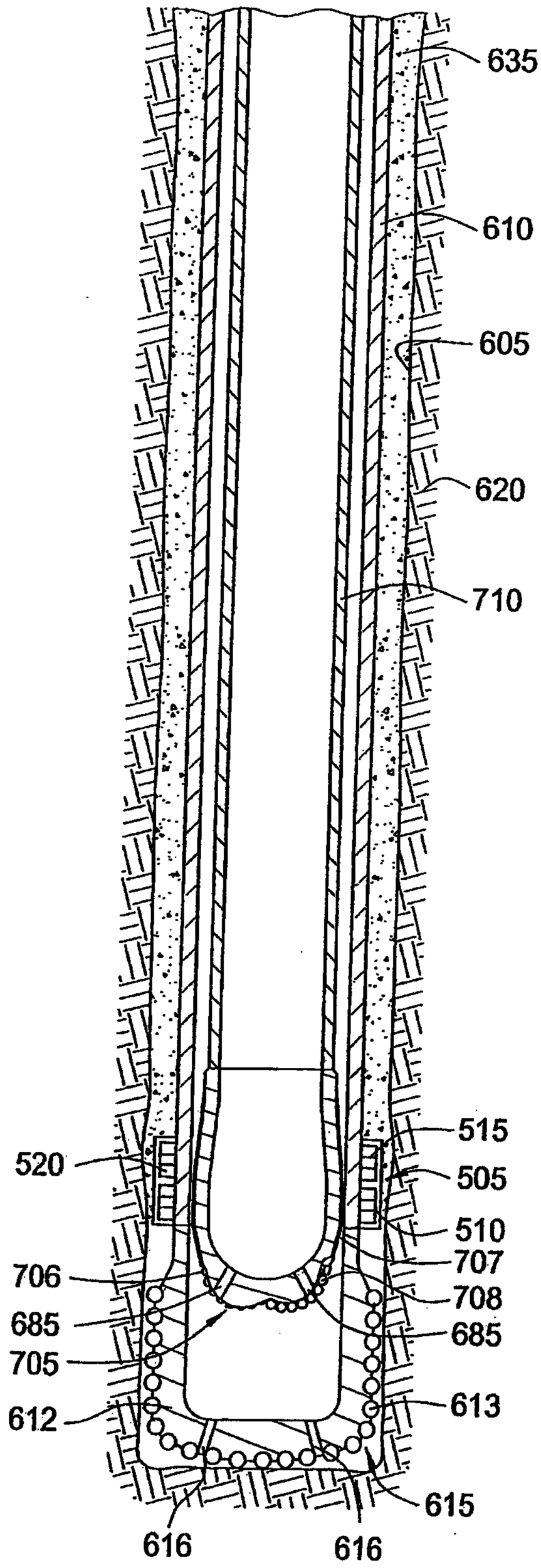
635
610
605
620
710
515
520
505
510
707
706
708
685
685
705
613
612
615
616
616

FIG. 12

FIG. 13

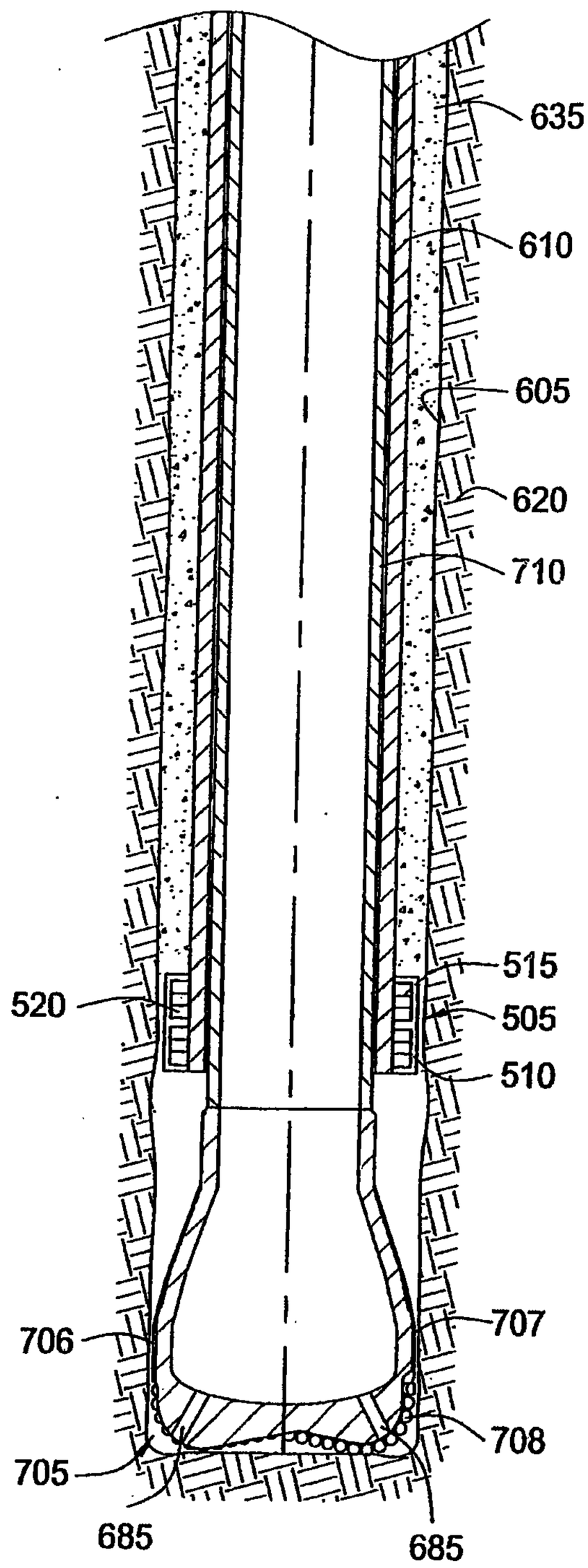

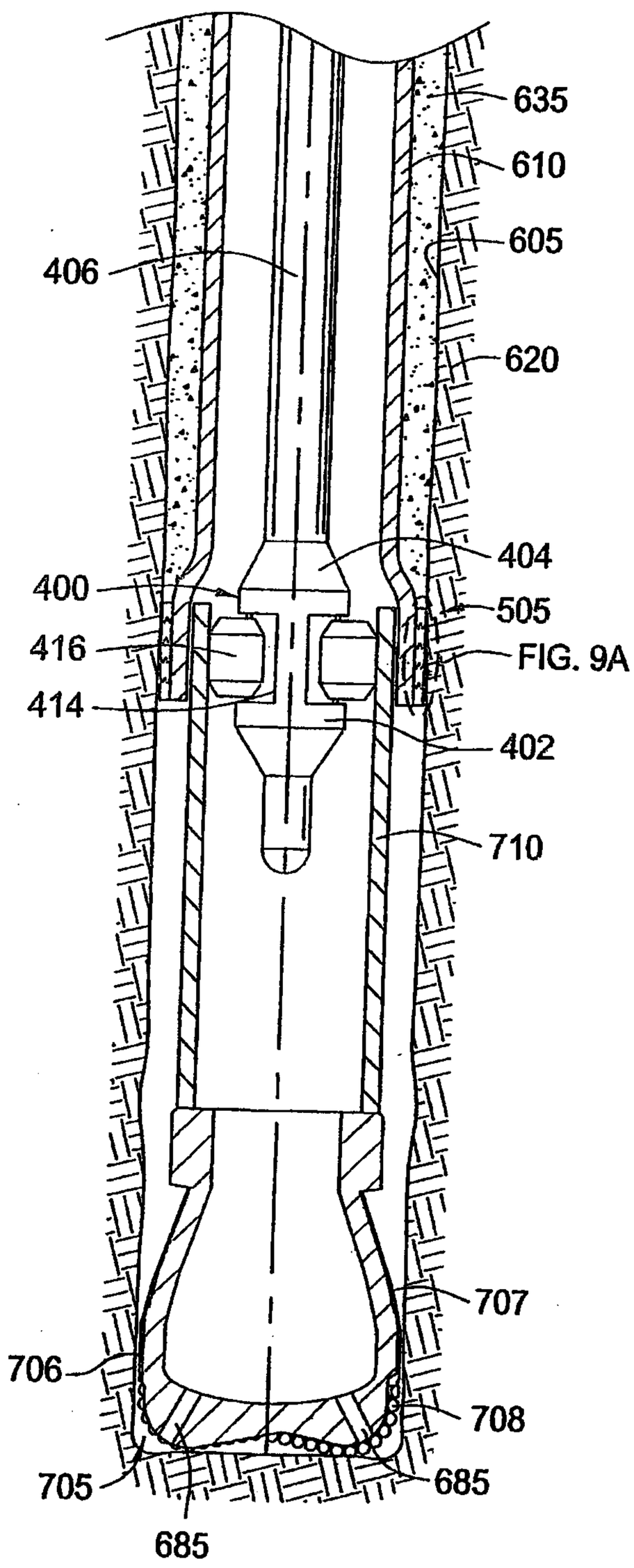

FIG. 14

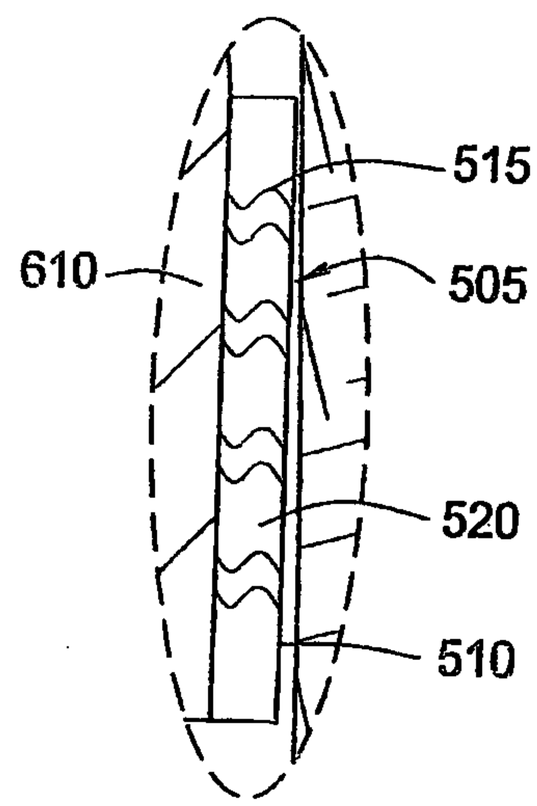

FIG. 14A

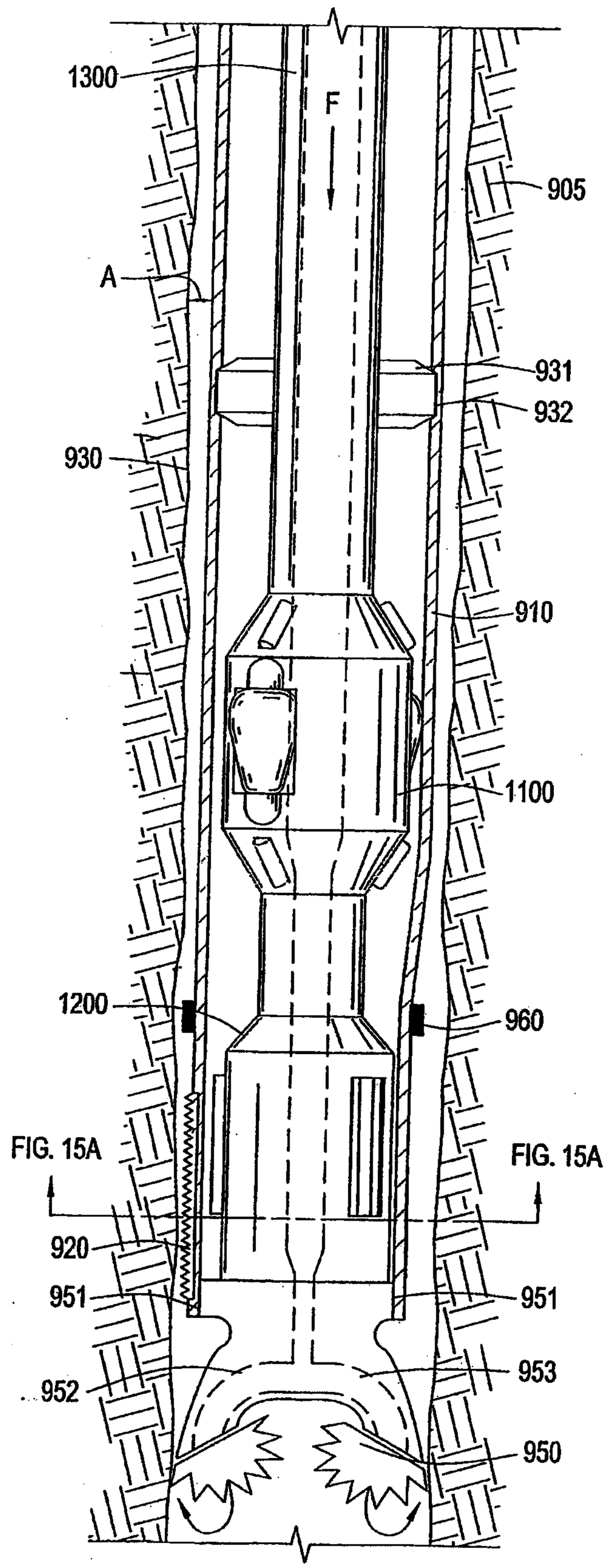
1300
F
905
A
931
932
930
910
1100
1200
960
FIG. 15A
FIG. 15A
920
951
951
952
953
950

FIG. 15

FIG. 15A

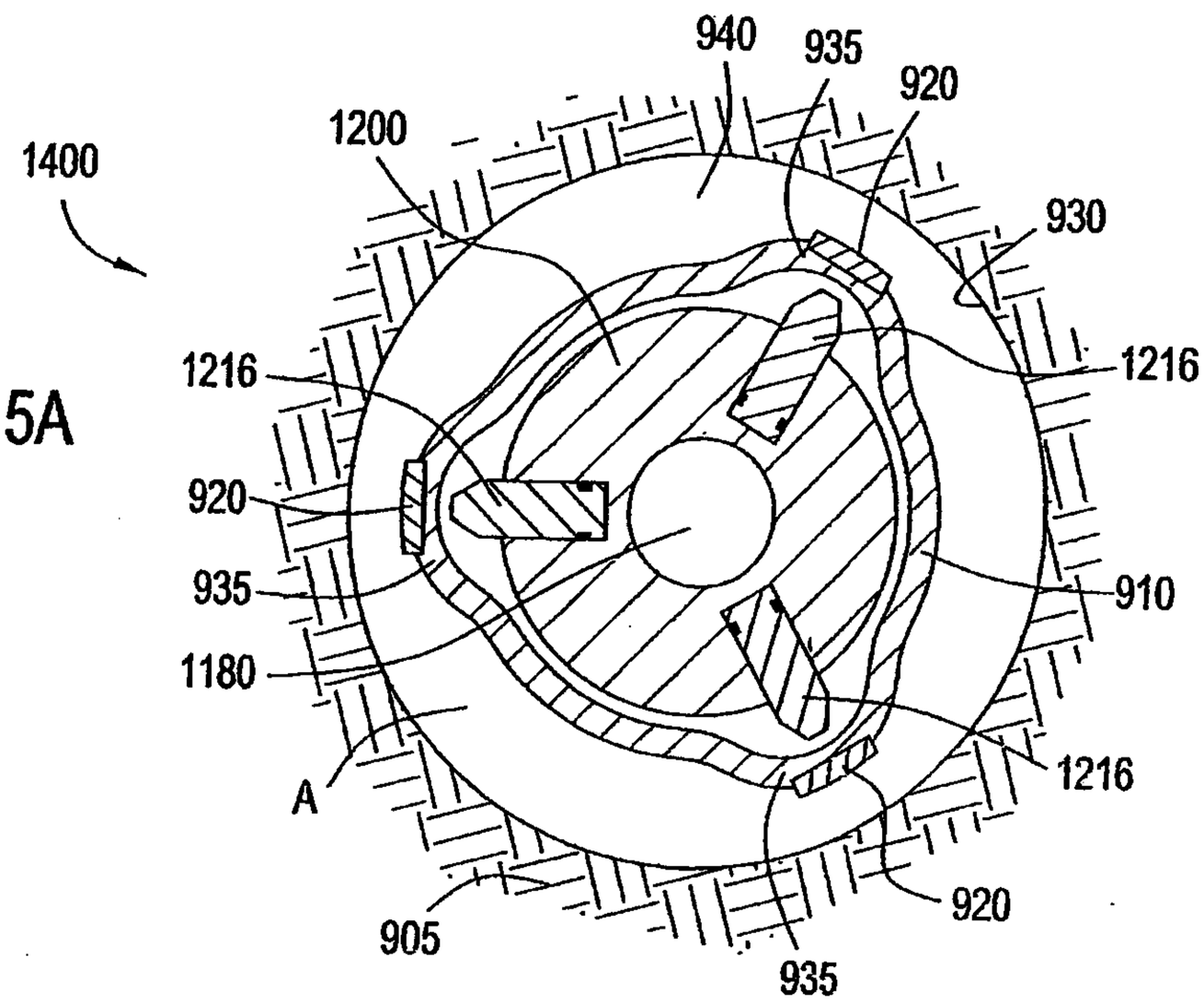

FIG. 16A

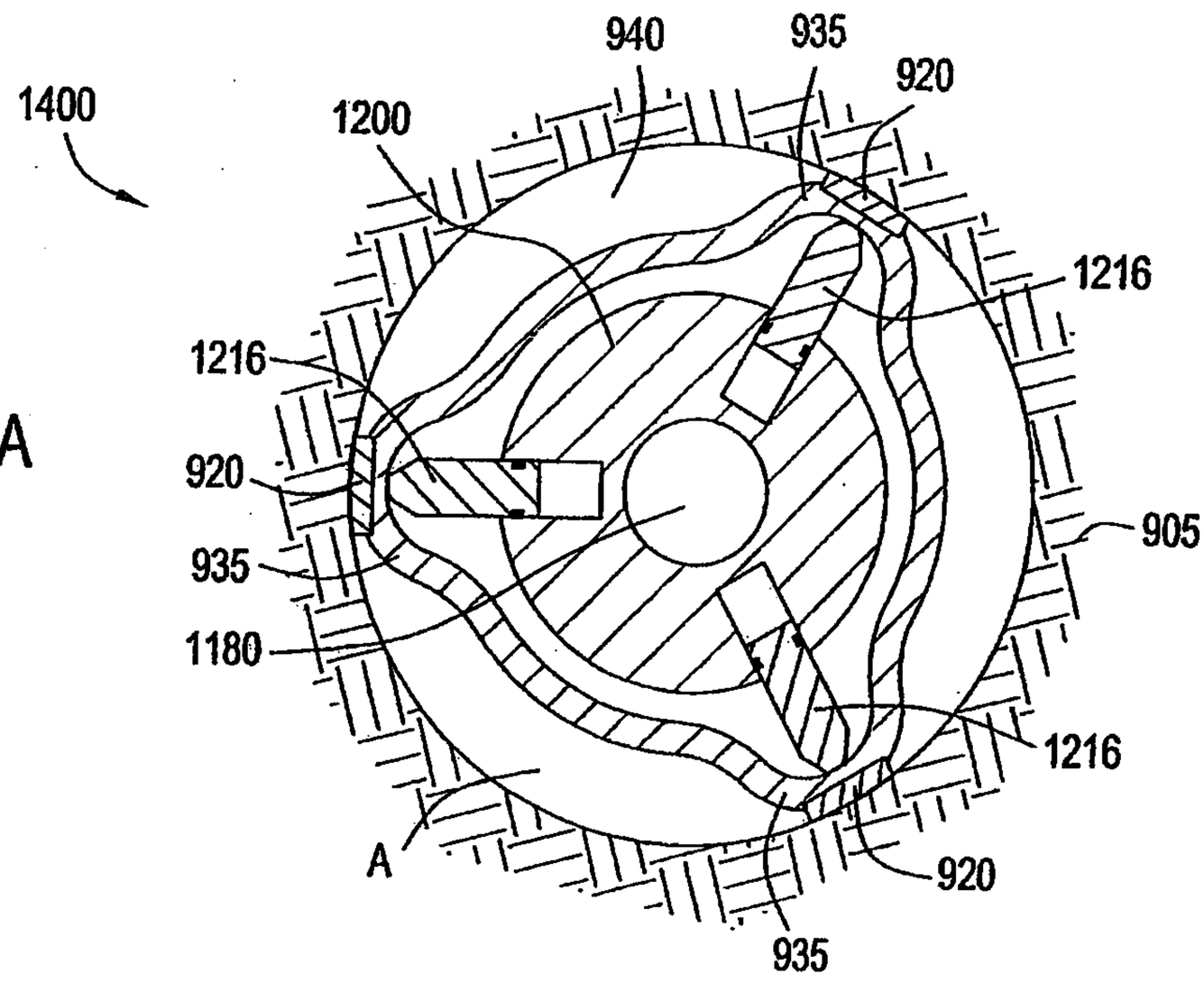

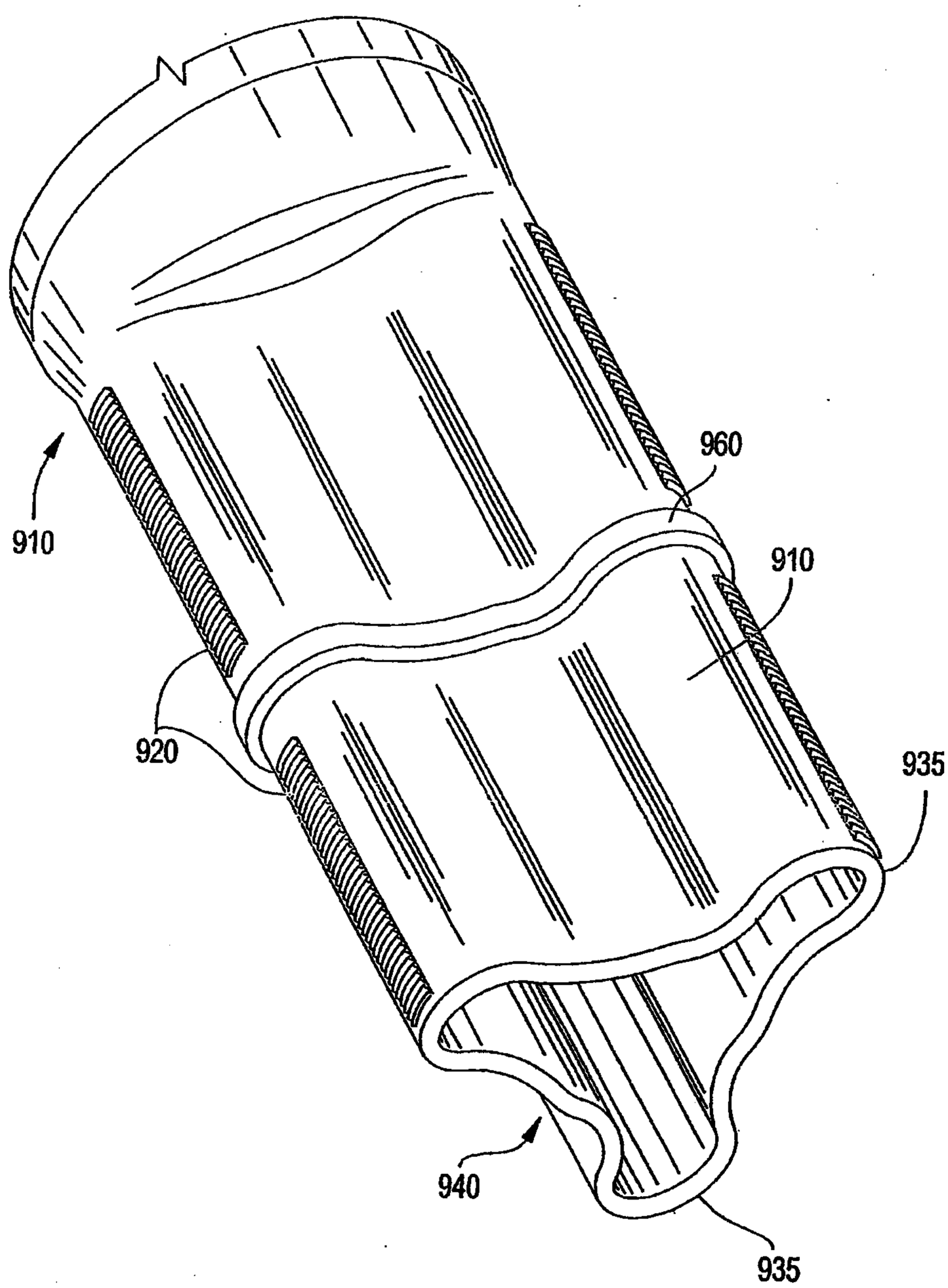

FIG. 15B

FIG. 15C

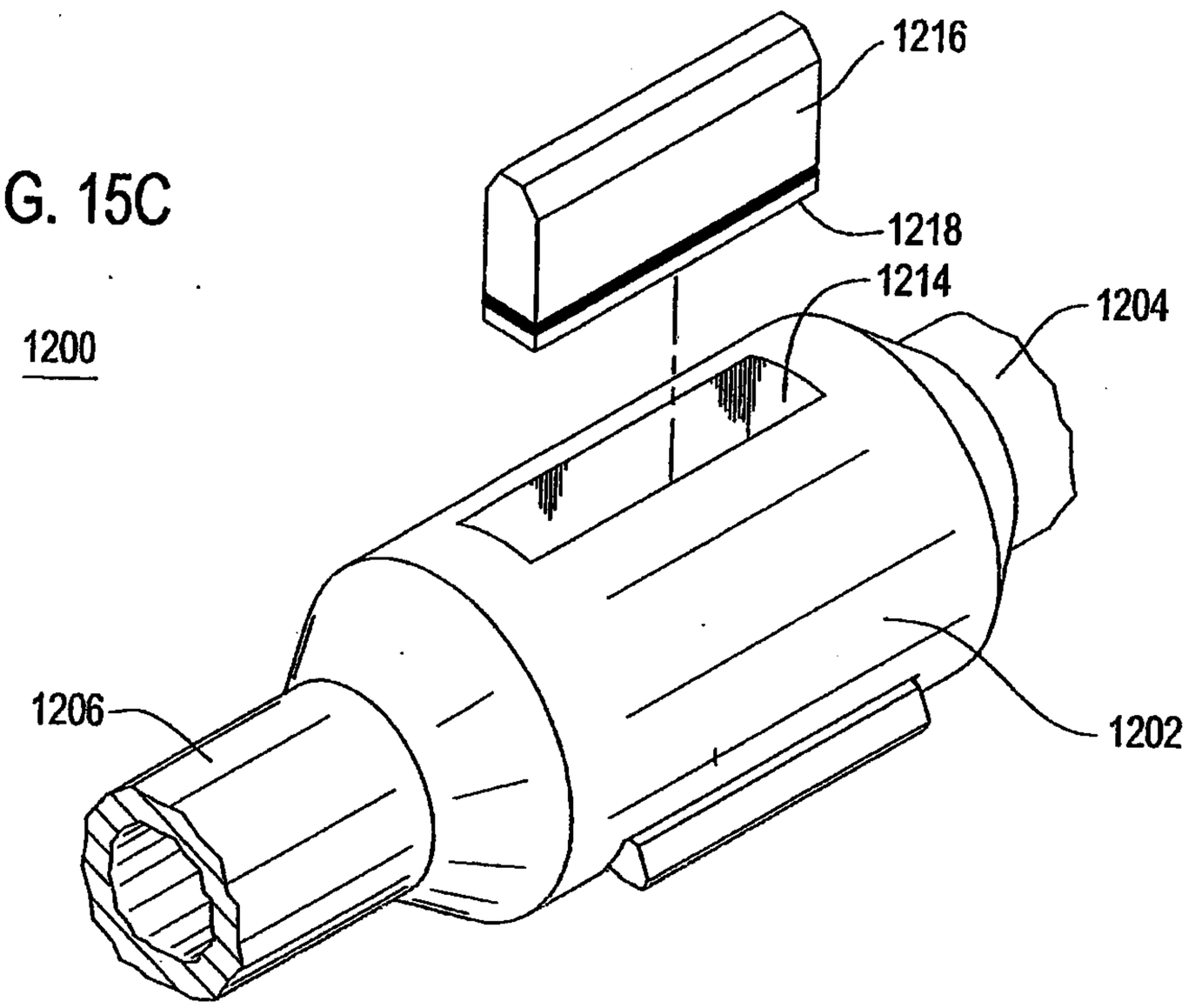

FIG. 15D

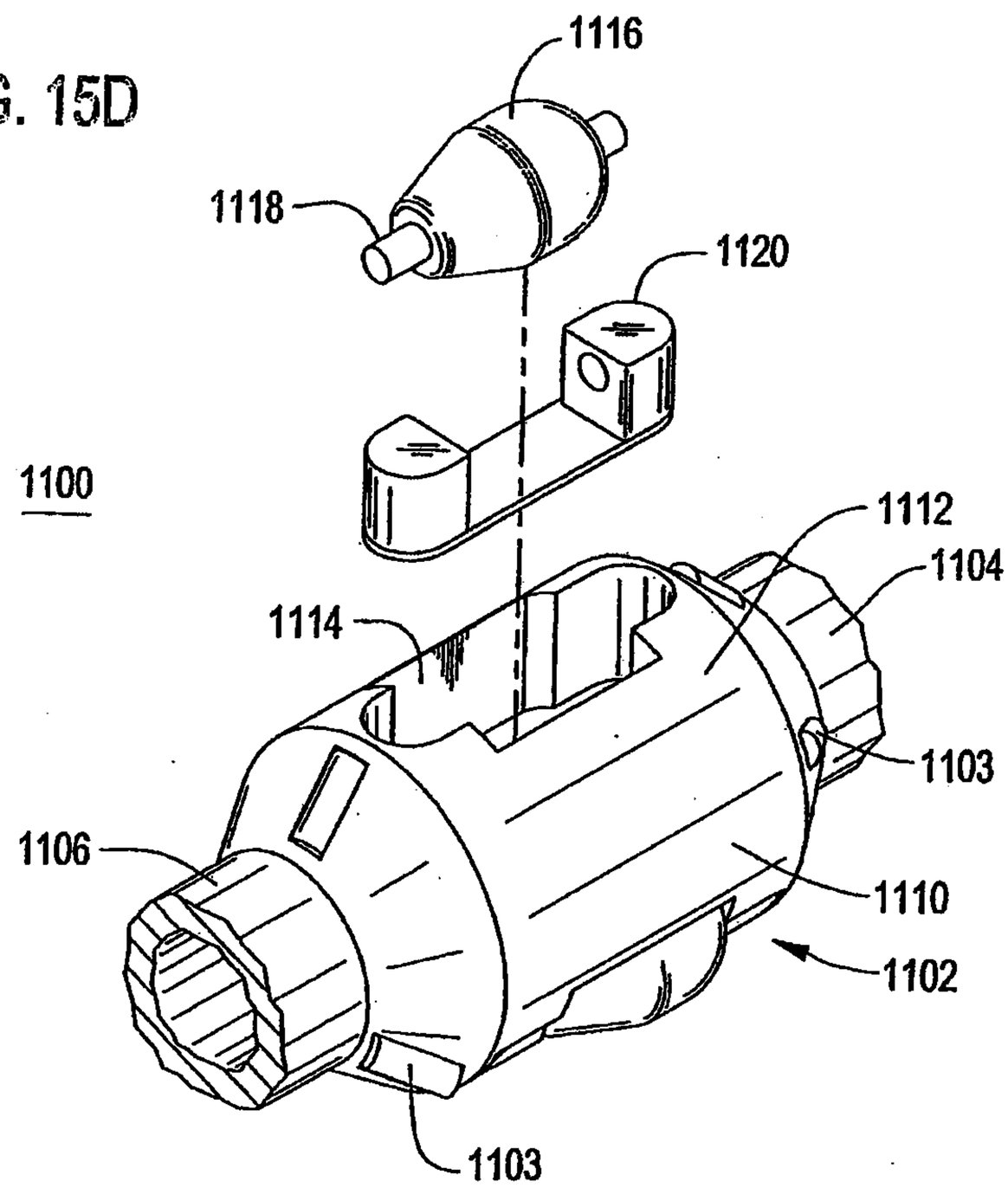

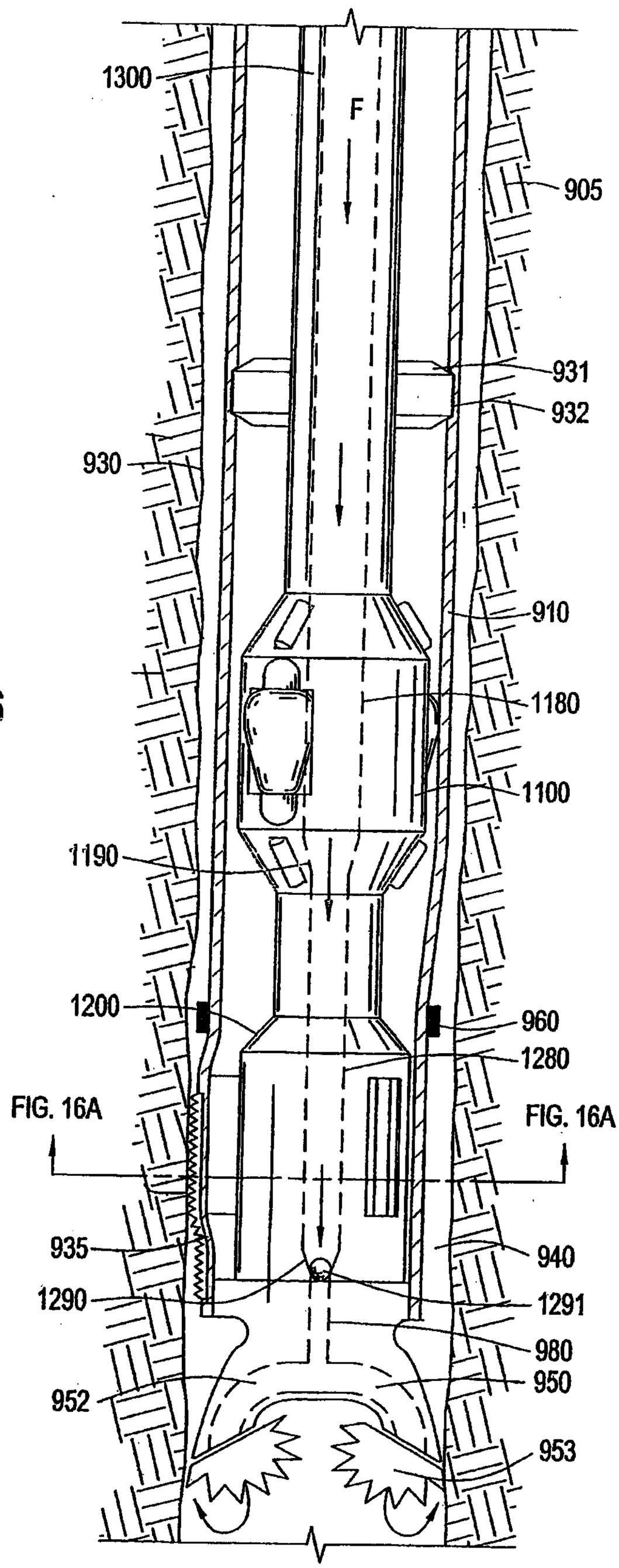
1300
F
905
931
932
930
910
1180
1100
1190
1200
960
1280
FIG. 16A
FIG. 16A
935
940
1290
1291
980
950
952
953

FIG. 16

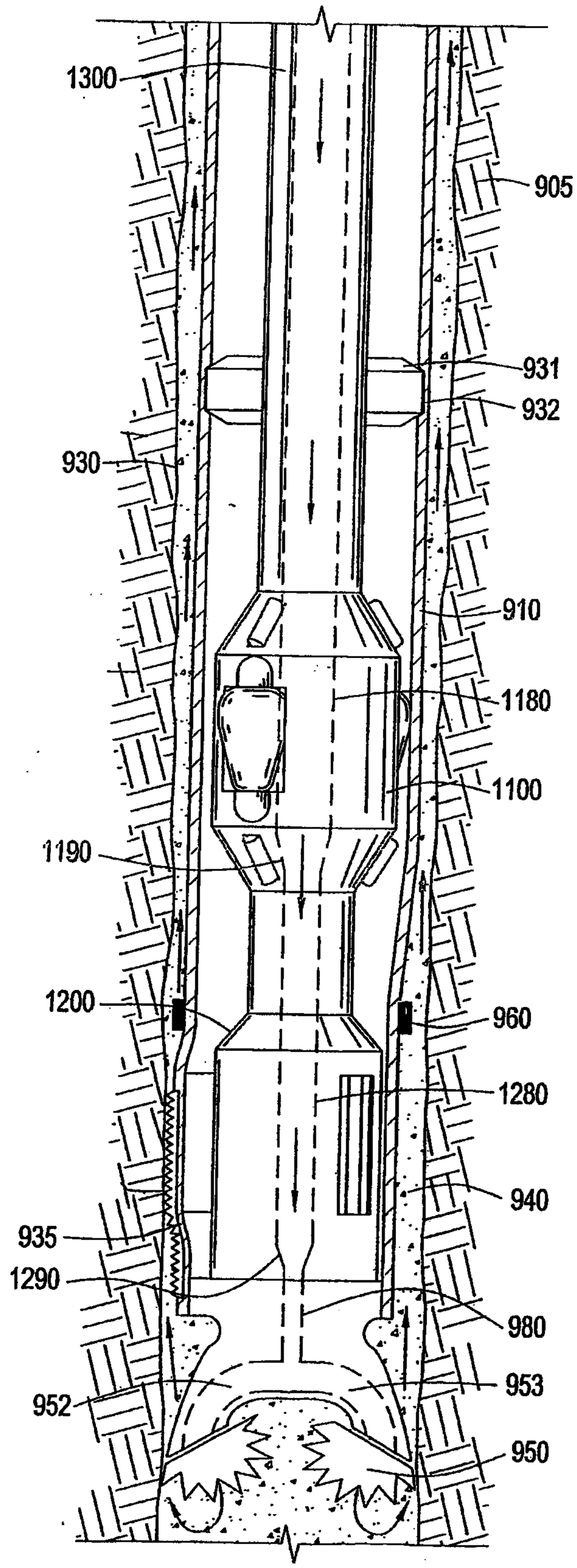
1300
905
931
932
930
910
1180
1100
1190
1200
960
1280
940
935
1290
980
953
952
950

FIG. 17

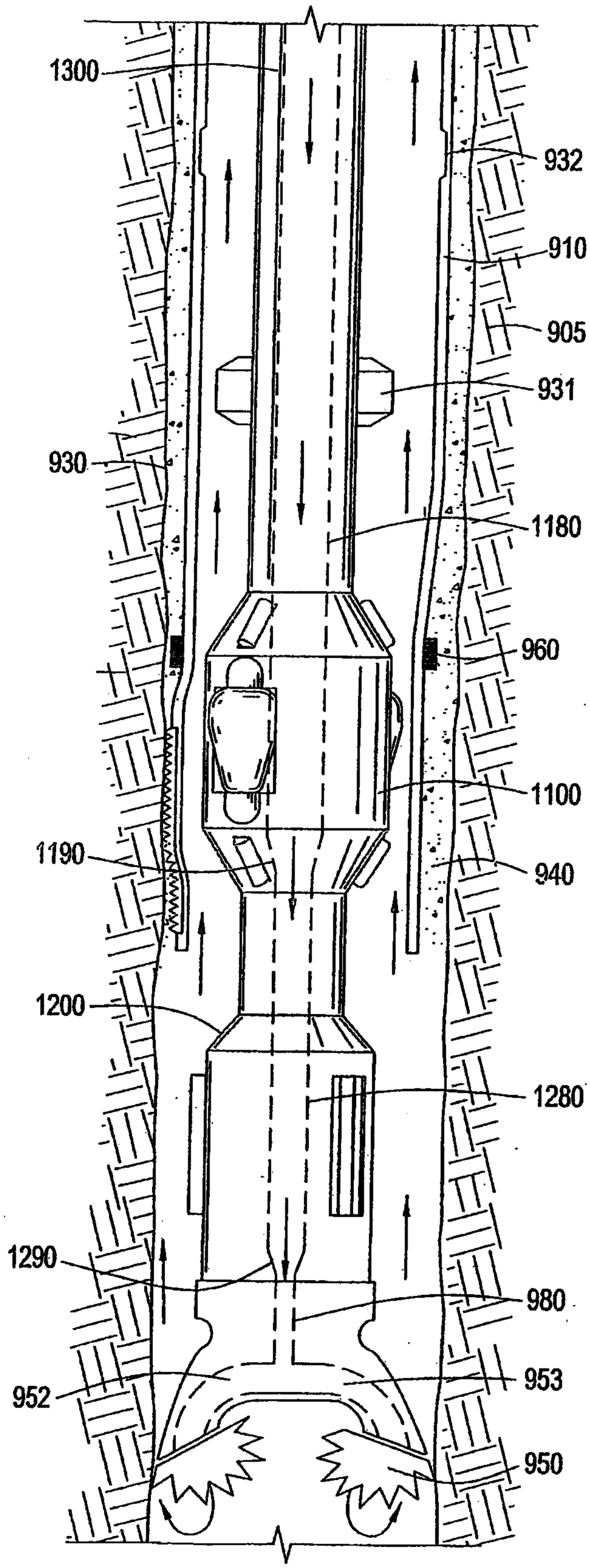
1300
932
910
905
931
930
1180
960
1100
1190
940
1200
1280
1290
980
952
953
950

FIG. 18

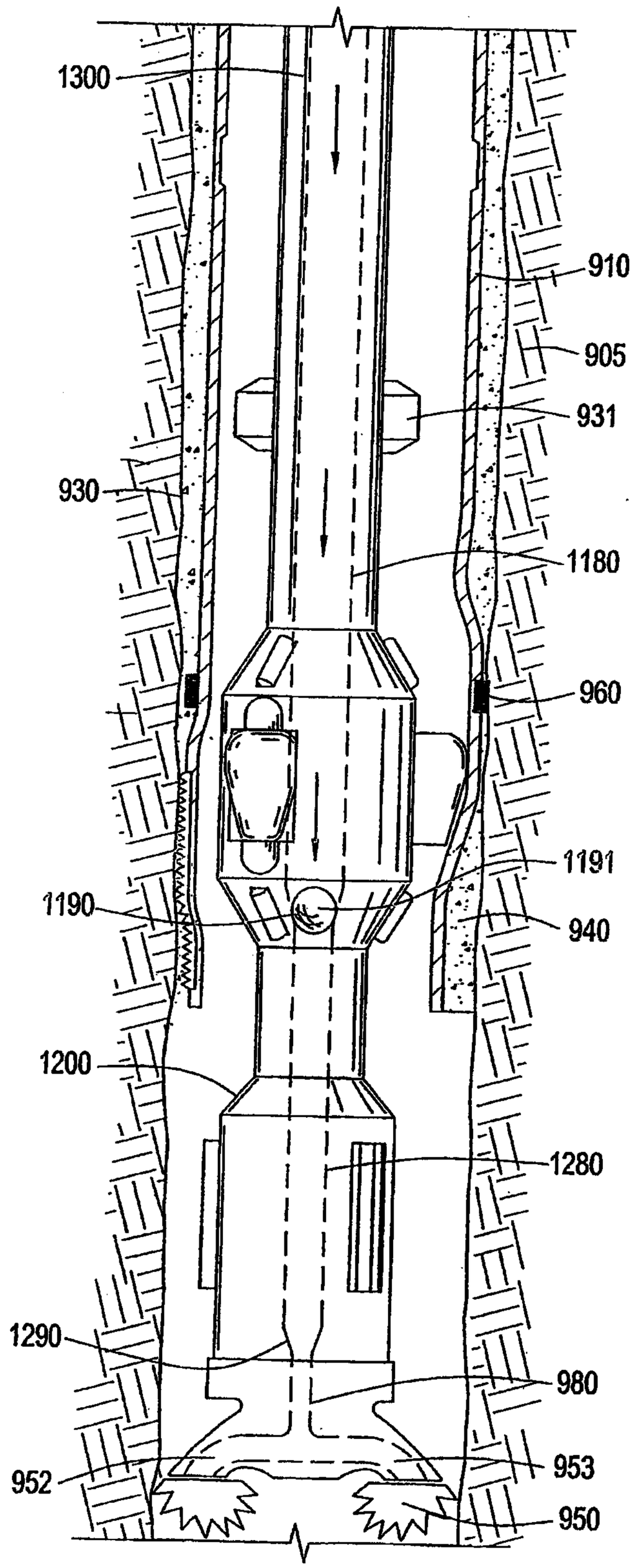
1300
910
905
931
930
1180
960
1191
1190
940
1200
1280
1290
980
952
953
950

FIG. 19

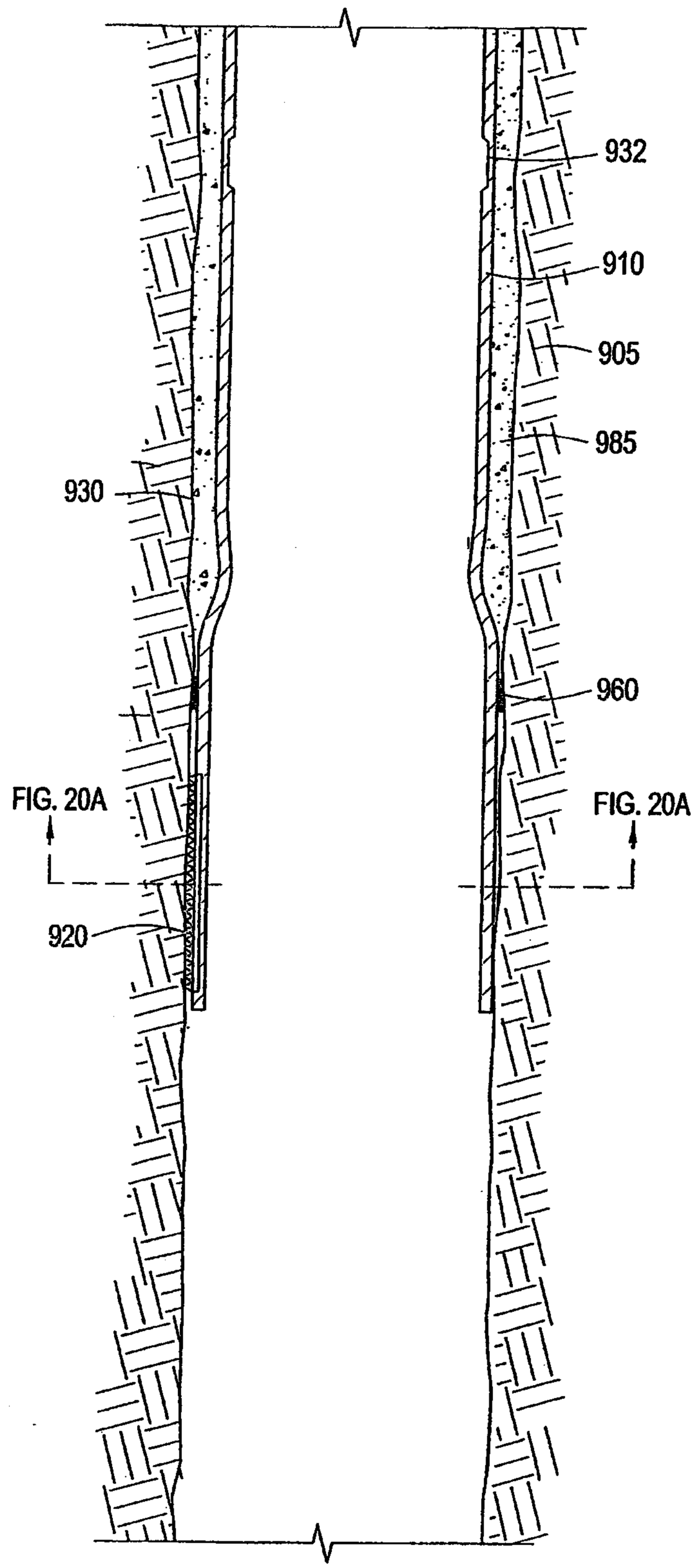

FIG. 20

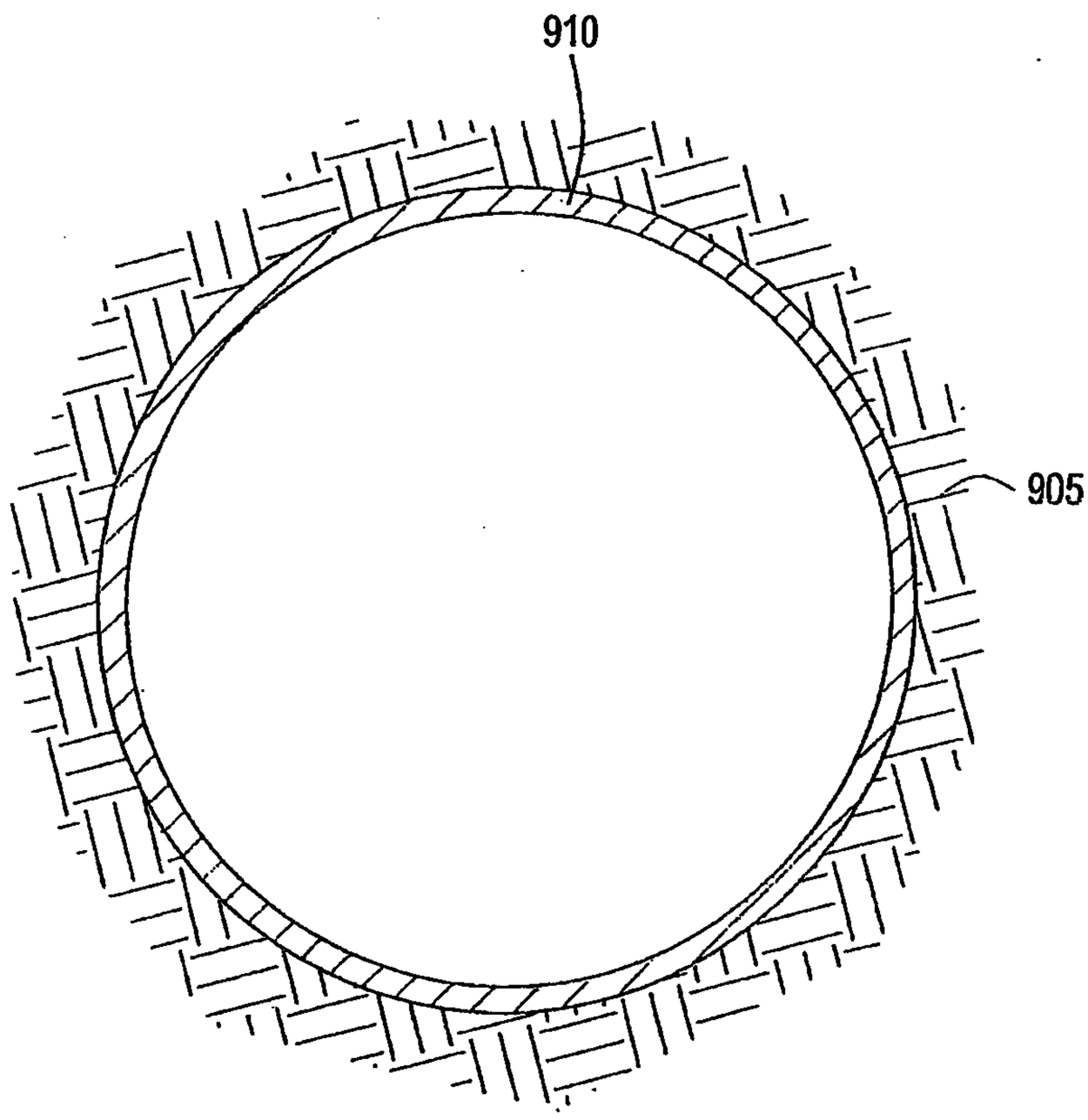

FIG. 20A

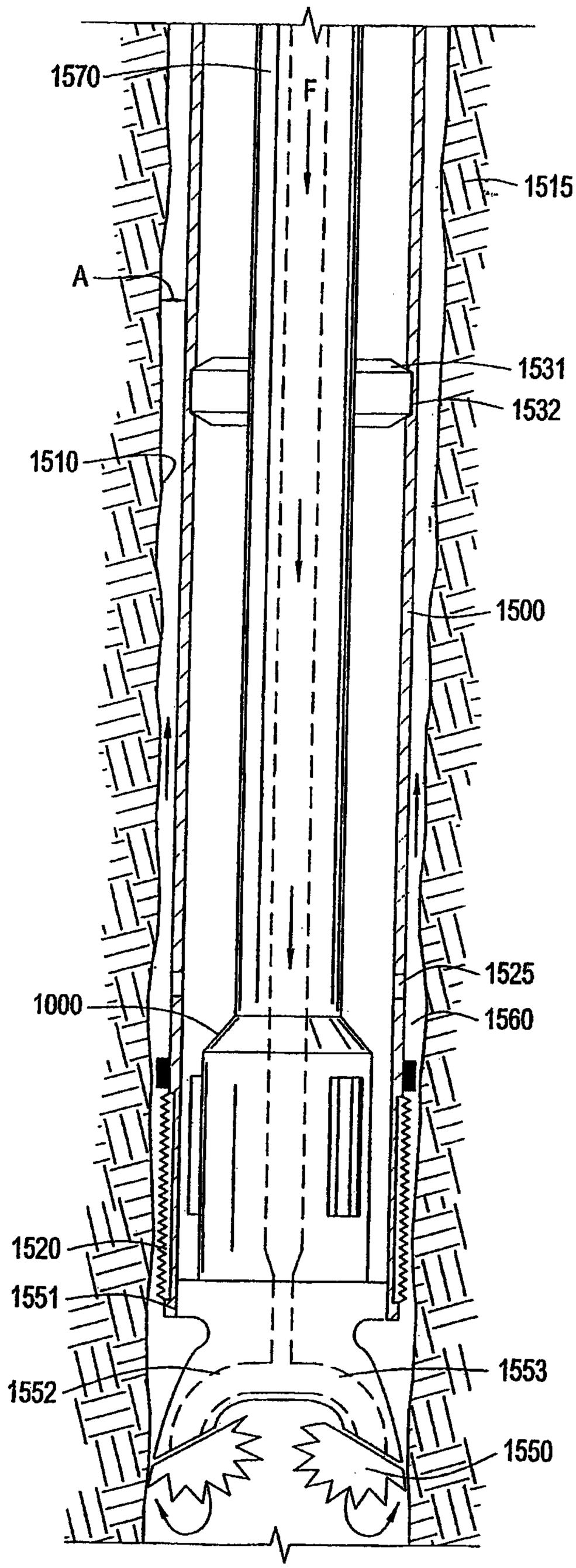
1570
F
1515
A
1531
1532
1510
1500
1525
1000
1560
1520
1551
1553
1552
1550

FIG. 21

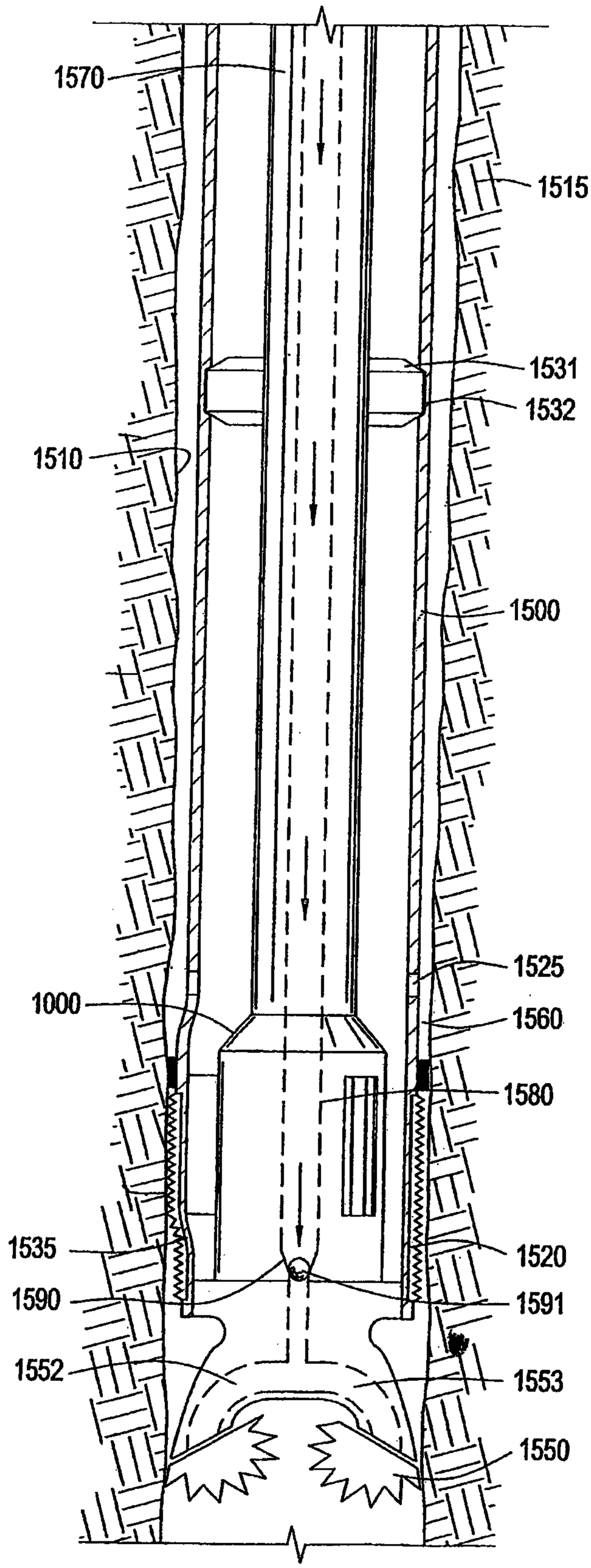
1570
1515
1531
1532
1510
1500
1525
1000
1560
1580
1535
1520
1590
1591
1552
1553
1550

FIG. 22

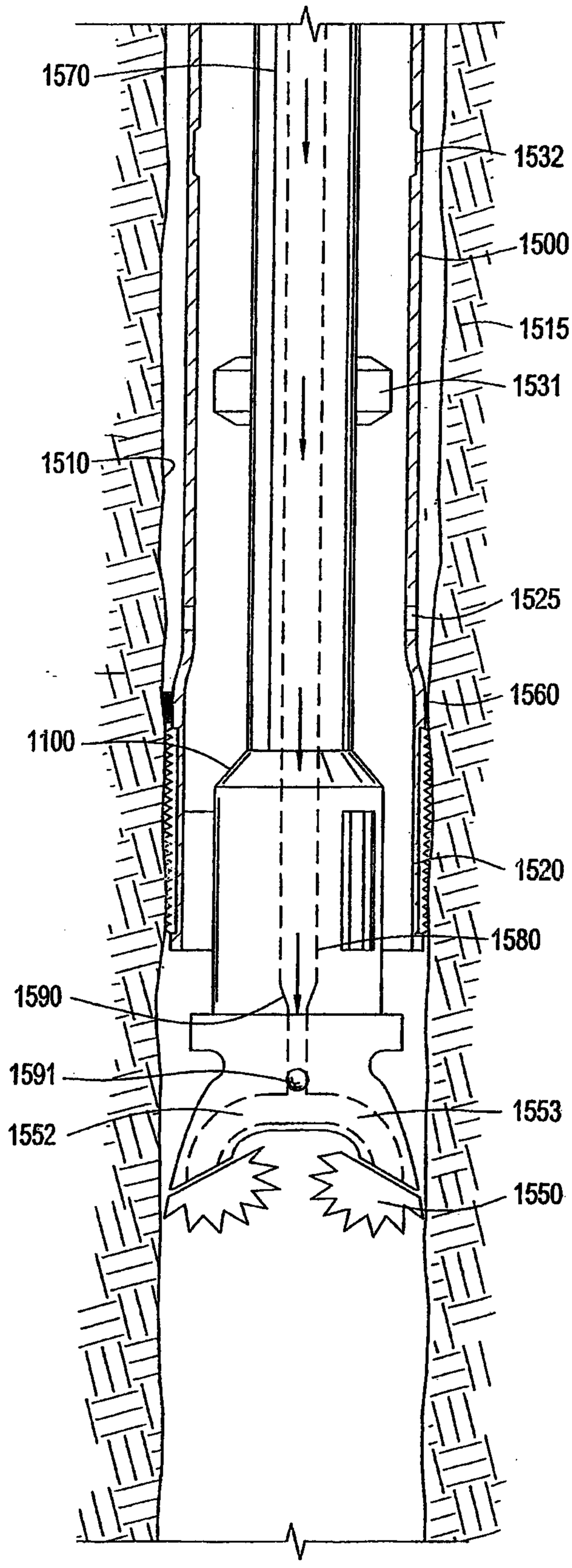
1570
1532
1500
1515
1531
1510
1525
1560
1100
1520
1580
1590
1591
1553
1552
1550

FIG. 23

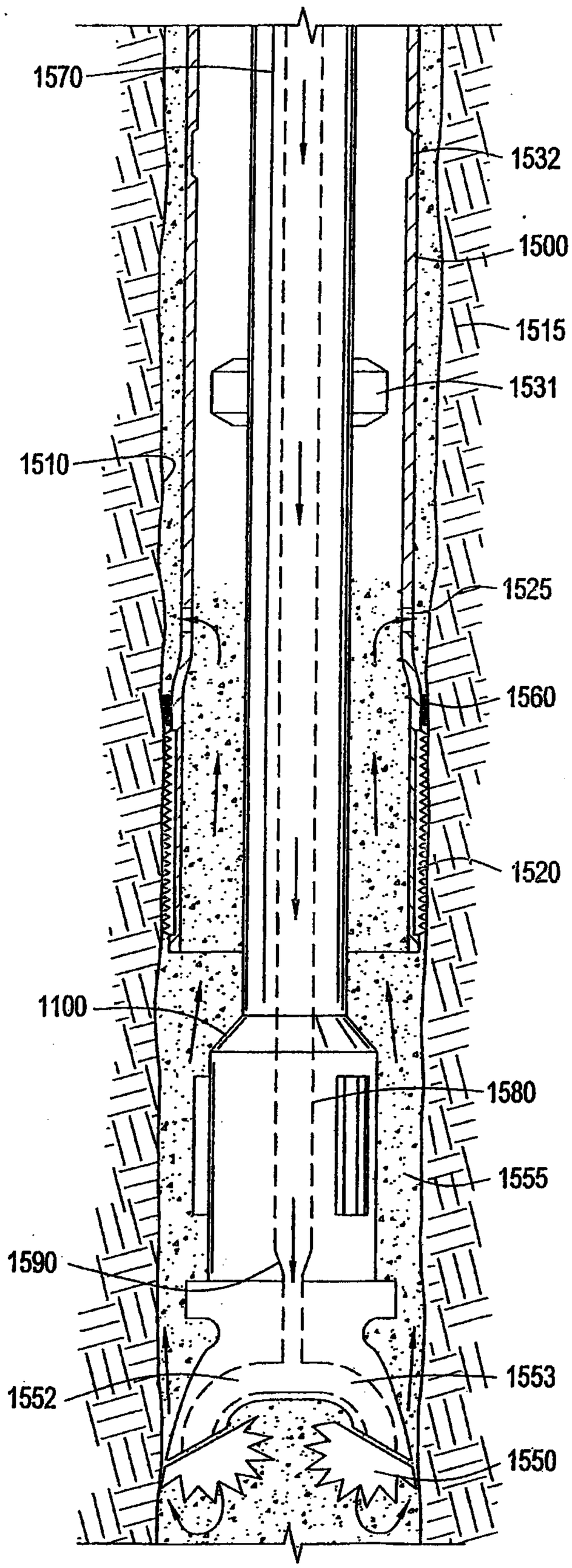
1570
1532
1500
1515
1531
1510
1525
1560
1520
1100
1580
1555
1590
1553
1552
1550

FIG. 24

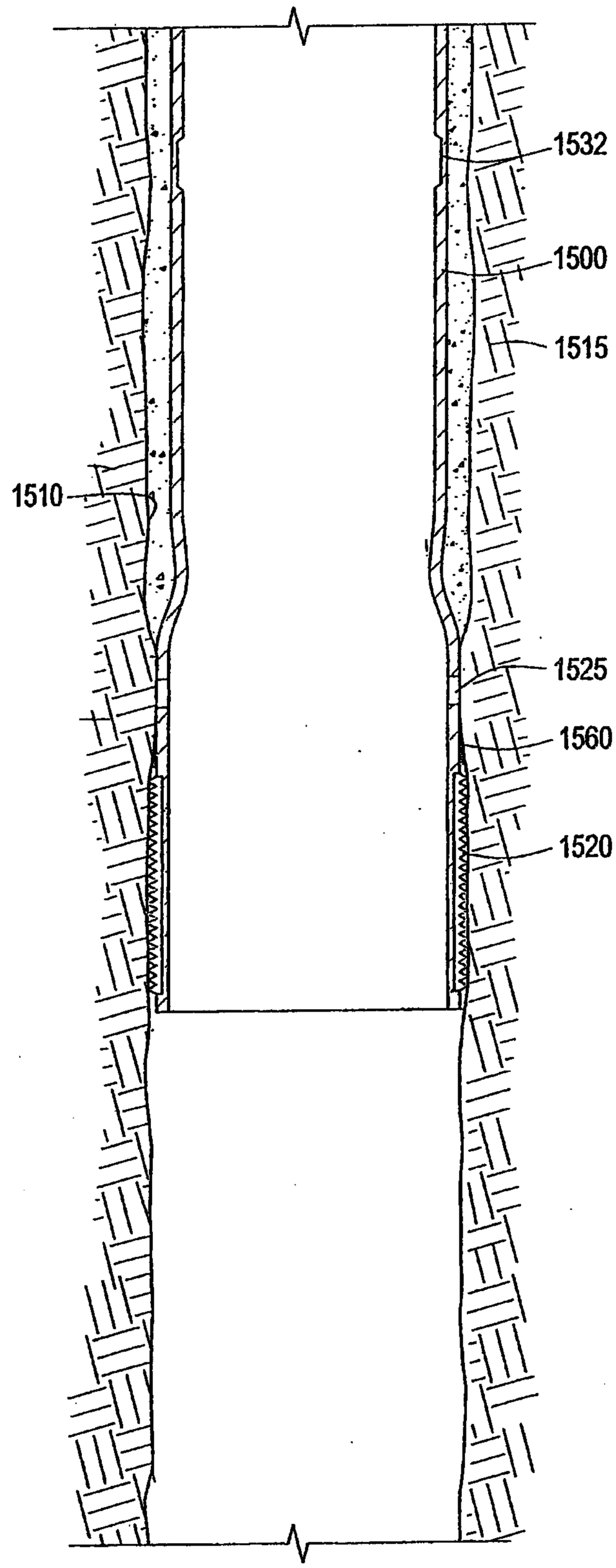

FIG. 25

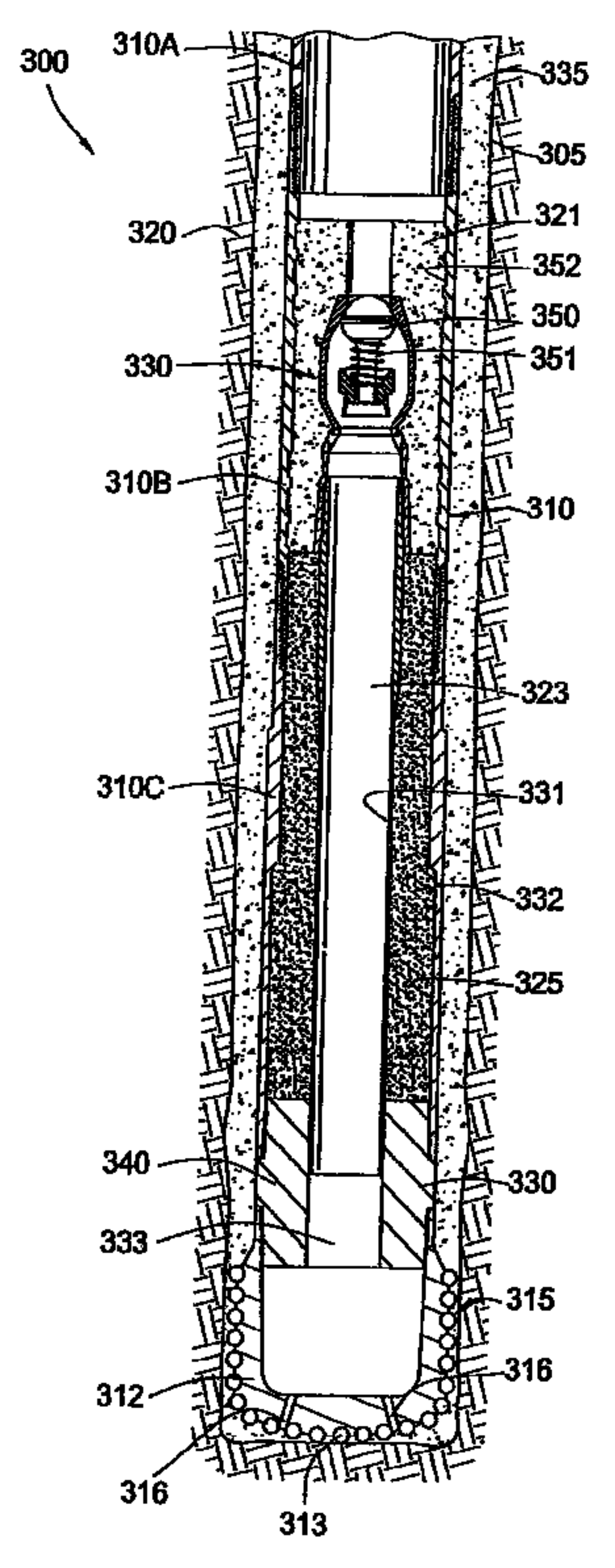
300
310A
335
305
321
320
352
350
351
330
310B
310
323
310C
331
332
325
340
330
333
315
316
312
316
313