Aug. 3, 1926. 1,594,949

H. B. HARTMAN

LIQUID COOLED GENERATING UNIT FOR HIGH FREQUENCY APPARATUS

Filed Oct. 29, 1924

Fig. 1.

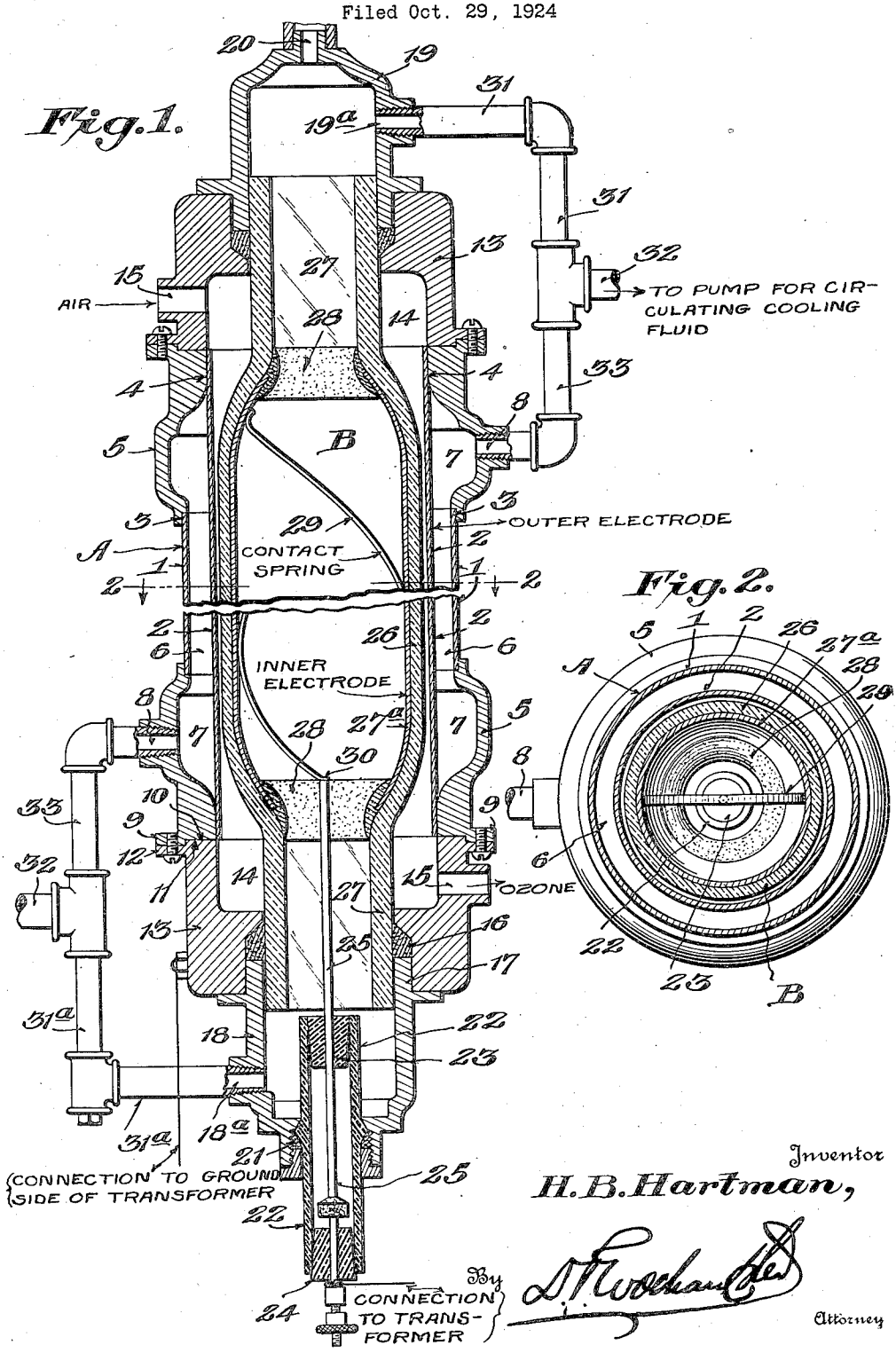

Fig. 2.

Inventor

H. B. Hartman,

By D. T. Worthington

Attorney

Patented Aug. 3, 1926. 1,594,949

UNITED STATES PATENT OFFICE.

HARRY BUXTON HARTMAN, OF SCOTTDALE, PENNSYLVANIA, ASSIGNOR TO ELECTRIC WATER STERILIZER & OZONE COMPANY, OF SCOTTDALE, PENNSYLVANIA, A CORPORATION OF PENNSYLVANIA.

LIQUID-COOLED GENERATING UNIT FOR HIGH-FREQUENCY APPARATUS.

Application filed October 29, 1924. Serial No. 746,693.

This invention relates to a novel ozone generator particularly adapted for use in connection with high-frequency currents.

To that end the invention contemplates a generator construction embodying the use of a fluid cooling medium, such for example as a non-conducting oil which is circulated by a pump or other means to maintain the efficiency of the generator under all conditions of use. In the generation of ozone by the use of electrical currents of high-frequency and voltage for example, 1,000 to 10,000 cycles, the amount of heat generated in a single tube is so great that air cooling is not sufficient, and therefore, fluid cooling means, preferably of the oil type must be utilized.

Accordingly, the present invention has primarily in view the provision of a simple, practical and reliable construction which may be easily manufactured from parts which are susceptible of standardization thereby providing a construction that is economical to manufacture and easily assembled.

A further object of the invention is to provide a novel combined electrode and dielectric unit wherein the metallic electrode element is effectively sealed against oil seepage between the metallic surface and the dielectric.

A still further object of the invention is to provide novel means for circulating the cooling fluid through and about both electrodes.

With the above and other objects in view which will more readily appear as the nature of the invention is better understood, the same consists in the novel construction, combination and arrangement of parts hereinafter more fully described, illustrated and claimed.

A preferred and practical embodiment of the invention is shown in the accompanying drawings, in which:—

Figure 1 is a vertical sectional view of the improved apparatus.

Figure 2 is a horizontal sectional view taken on the line 2—2 of Figure 1.

Similar reference characters designate corresponding parts throughout the several figures of the drawings.

According to the embodiment of the invention shown in the accompanying drawings, the same includes in its organization a body designated generally as A and including an outer shell or jacket 1 and an inner tubular electrode 2, the same being held in spaced apart concentric relation by frictional or wedging fit respectively with the recessed flanged portions 3 and interior enlarged shoulder portions 4 of the carrier rings 5 thereby to provide a cooling fluid jacket or chamber. One of these rings is fitted to each end of the body A as will be clearly observed from Figure 1 and due to the spacing of the members 1 and 2 by arranging the same in the parts 3 and 4, a fluid circulating chamber 6 is provided. This chamber terminates in the enlarged end portions 7 which have the ports 8.

The electrode member 2 as well as the rings 5 are preferably of aluminum, and the said rings may be formed with the flanges 9 and the recessed portions 10 for receiving and engaging with the complemental annular boss portion 11 and the flange 12 of the aluminum end caps or closure members 13. These end members are of duplicate construction and are preferably recessed as at 14 and provided with the lateral ports 15, which act as either air or ozone ports according to the type of machine that the apparatus is operating in conjunction with. The end walls of the caps 13 are provided with openings for receiving cork packing rings 16 and the gland portions 17 of the hollow aluminum closure plugs 18 and 19. The plug 19 is provided at one end with an air vent opening 20 which may be closed by a suitable cap, while the plug 18 is provided with a packing gland 21 for holding a porcelain insulator tube or sleeve 22. This insulator tube is provided with bushings 23 and 24 for supporting a conductor rod 25 for making contact with the inner electrode of the combined dielectric and electrode unit B.

The said combined electrode unit and dielectric B preferably consists of a tubular dielectric member in the form of a glass tube 26 having the end portions 27 of reduced diameter, and having the enlarged interior portion thereof covered with a metal coating 27^a which constitutes the inner electrode for the device. This coating 27^a is preferably sprayed on the interior of the tube by a suitable metal spraying apparatus,

and extends throughout the surface of the enlarged portion of the electrode and also on the curved portions thereof between the body 26 and small ends 27. For the purpose of preventing oil from seeping in between the metallic coating 27[a] and the inside face of the glass dielectric 26 it is necessary to seal the joint between the coating and the glass as indicated at 28, and not effected by heat, and at the same time adhering tenaciously to both the metal and glass. This is a very important factor in the operation of the device because it is essential that fluid be prevented from seeping in between the metallic coating and the glass to prevent electrical discharges occurring between 26 and 27[a], as such electrical discharges would cause a cracking of the cooling fluid used.

For the purpose of distributing the current efficiently to all portions of the metallic coating 27[a], there is provided a spiral bronze spring 29 which connects as indicated at 30 with the central conductor rod 25. In using high frequencies it is desirable that the current be uniformly distributed throughout the inner electrode, and the arrangement described insures that result.

The end caps 13 serve to center and hold the ends 27 of the glass dielectric preferably centered within the tubular aluminum electrode 2, and the open ends of said electrode communicate with the hollow aluminum closure plugs 18 and 19. These plugs are respectively provided with ports 18[a] and 19[a] which communicate with the branches 31 and 31[a] of the piping which communicates with the main circulating pipes 32. As will be observed from Figure 1 the said main circulating pipes 32 are provided with branches 33 which communicate with the ports 8 of the rings 5, and therefore, the cooling oil or fluid divides at the T or branch fitting at the end of the pipe 32 and makes its way into the jacket 6 surrounding the outer electrode 2 and also into the hollow plugs and interior of the combined dielectric and electrode element B.

In use the conductor rod 25 is connected with one of the terminals of a high tension transformer, and then the casing including the electrode 2 is grounded to the ground side of the transformer, thus completing the electrical circuit, whose current manifests itself in the form of a brush discharge between the tubular outer electrode 2 and the metallic coating 27[a] which constitutes the inner electrode of the apparatus. It will therefore be understood that ozone is generated as the air passes through the relatively constricted annular chamber formed by the outer face of the glass dielectric 26 and the tubular aluminum electrode 2. In this particular type of application it is preferred to have the air enter at the upper port 15 and pass downwardly through the generator, the ozone passing out of the lower port 15.

The oil or other cooling fluid is preferably circulated from pipes 32 in a suitable cooling coil or radiator by means of a pump, thereby compelling the oil to move quickly enough to keep the heat down to the safety point.

With the arrangement described it is possible to wash out the generator by flushing water through the lower port 15. To do this proper piping connections are arranged so that disconnecting the air line is unnecessary to thus flush the space between the electrode 2 and glass 26. After the water has been drained off, and the blower again turned on, the small remaining quantity of water will be quickly evaporated.

From the foregoing it will be apparent that the present construction and arrangement provides a simple and practical generator construction which is capable of facile assembly, and is easy to manufacture and maintain.

Without further description it is thought that other features and advantages will readily appear to those skilled in the art, and it will of course be understood that changes in the form, proportion and minor details of construction may be resorted to without departing from the spirit of the invention or scope of the appended claims.

I claim:—

1. A liquid cooled ozone generator for high frequency apparatus comprising a tubular jacketed casing including the outer electrode, detachable closure members therefor, and a combined tubular dielectric and electrode unit insertible within said casing and supported by the closure members, and means for supplying a cooling fluid to the jacketed casing and said unit.

2. A tubular liquid cooled ozone generator for high frequency apparatus comprising a body including a jacketed electrode, separable closure members at the ends of said body, a combined tubular dielectric and electrode unit supported in the said closure members, means for establishing electrical contact with the inner electrode, and a fluid cooling system respectively communicating with the jacketed body and the interior of the said unit.

3. A tubular ozone generator comprising a fluid jacketed outer electrode member and a combined interior dielectric and electrode unit, and means for coursing a fluid cooling medium to said jacketed electrode member and through said combined dielectric and electrode member.

4. A tubular generator comprising a fluid jacketed outer electrode, closure members cooperating with the ends of said electrode to provide a relatively enclosed ozone gen-

erating chamber, a combined tubular dielectric and inner electrode unit mounted in said closure members, means for supplying a cooling fluid medium to said outer electrode and to said combined dielectric and inner electrode unit.

5. A tubular ozone generator including a tubular shell and electrode members, means for assembling said shell and electrode members in spaced relation to provide a fluid circulating jacket, closure means cooperating with said first named means to provide an ozone generating chamber, a combined tubular dielectric and electrode member having its ends supported in said closure members, means for supplying electrical current to the inner electrode, and means for coursing a cooling fluid through said combined tubular dielectric and electrode unit and said jacket.

6. An ozone generator including a tubular body comprising an outer shell and an inner tubular electrode arranged in spaced relation to provide a circulating jacket, a tubular dielectric arranged within the tubular electrode, means for supporting said tubular dielectric and cooperating with the tubular body to provide an ozone generating chamber, an electrode carried by the inside face of the tubular dielectric member, means for establishing electrical contact with the inner electrode, and means for supplying fluid to the interior of said dielectric and said jacket of the body.

7. A ozone generator comprising a body consisting of concentric tubular members one of which constitutes the outer electrode and the space between which constitutes a chamber for circulating a cooling medium, ring like members for holding said members in spaced relation, recessed end caps cooperating with said ring like members to provide an ozone generating chamber, a tubular dielectric having reduced end portions carried by said end caps, an inner electrode member carried by the inside of the tubular dielectric, hollow plugs communicating with the open ends of said dielectric member, a contact having an outside terminal and adapted to establish electrical communication with the inner electrode through one end of the dielectric member, and means for supplying a cooling medium to the space between the shell and the outer electrode and to the hollow plugs.

8. A tubular ozone generator including concentric shell and electrode members, rings having different internal diameters for interfitting and engaging with said shell and electrode members thereby to maintain the same in spaced relation and to provide a fluid circulating jacket, dielectric supporting cap members detachably engaging with said rings, a tubular dielectric member supported in said caps and spaced from the inner electrode to provide an ozone generating chamber, an inner electrode carried by the inside face of the tubular dielectric, means for establishing electrical contact with said inner electrode, and means for circulating a fluid cooling medium through said tubular dielectric and said jacket.

9. A tubular ozone generator comprising a casing consisting of a tubular outer shell, rings fitted to said outer shell and having interior shoulder portions, a tubular electrode fitted in said shoulder portions, ported closure members fitted to said rings and provided with openings, a combined tubular dielectric and inner electrode unit having its ends supported in said closure members, hollow plugs fitted to said end caps, a cooling-pipe system respectively communicating with said plugs and with said rings, and an electrical contact device carried by one of said plugs for establishing electrical contact with the inner electrode.

10. A tubular ozone generator comprising a casing consisting of a tubular outer shell, rings fitted to said outer shell and having interior shoulder portions, a tubular electrode fitted in said shoulder portions, ported closure members fitted to said rings and provided with openings, a combined tubular dielectric and inner electrode unit having its ends supported in said closure members, hollow plugs fitted to said end caps, a cooling pipe system respectively communicating with said plugs and with said rings, and an electrical contact device carried by one of said plugs for establishing electrical contact with the inner electrode, said electrical contact device comprising a hollow insulator supported in the plug, a contact rod having an exterior terminal and having the inner end thereof extending through one of the open ends of the tubular dielectric member, and a spiral conductor member connected with said contact and establishing communication with the inner electrode throughout its length.

11. In an ozone generator of the class described a combined dielectric and electrode unit, means for coursing a cooling fluid through said unit, and means for sealing the joint between the electrode and the dielectric thereby to prevent seepage of the cooling fluid between the electrode and the dielectric.

12. In an ozone generator of the class described, a tubular dielectric, a tubular inner electrode carried by said dielectric, and means at the junction of the ends of the inner electrode and dielectric for preventing the entrance of fluid between said members.

13. In an ozone generator of the class described, a combined tubular dielectric and electrode member comprising a tubular glass dielectric and an inner metallic electrode consisting of metal sprayed on the inside of said glass electrode, and a fluid proof seal

covering the ends of the inner metallic electrode and the glass adjacent thereto.

14. In an ozone generator a tubular glass dielectric of reduced diameter at its ends and an inner metallic electrode consisting of metal sprayed on the inside of the body of the dielectric of large diameter, means for coursing a non-conducting oil through said dielectric member, and a seal impervious to oil formed between the ends of the metallic electrode and the glass.

In testimony whereof I hereunto affix my signature.

HARRY BUXTON HARTMAN.