Aug. 12, 1952 S. A. HARKLEROAD 2,606,782

DOOR LATCH

Filed Jan. 19, 1948 2 SHEETS—SHEET 1

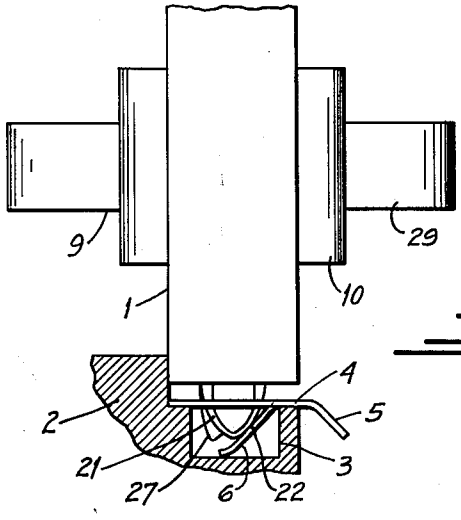

Fig. 1

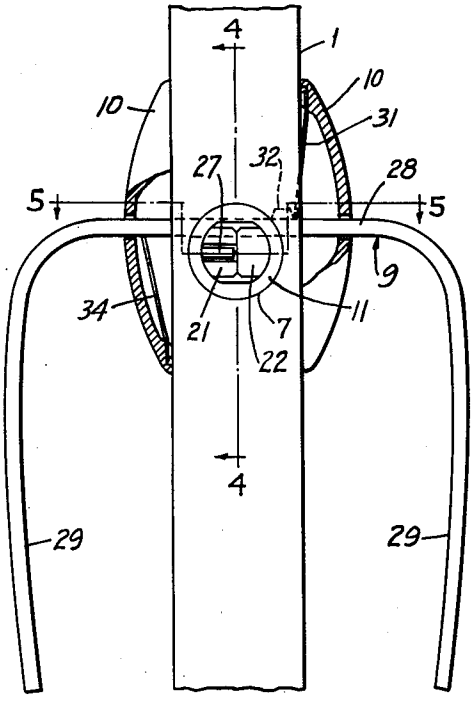

Fig. 2

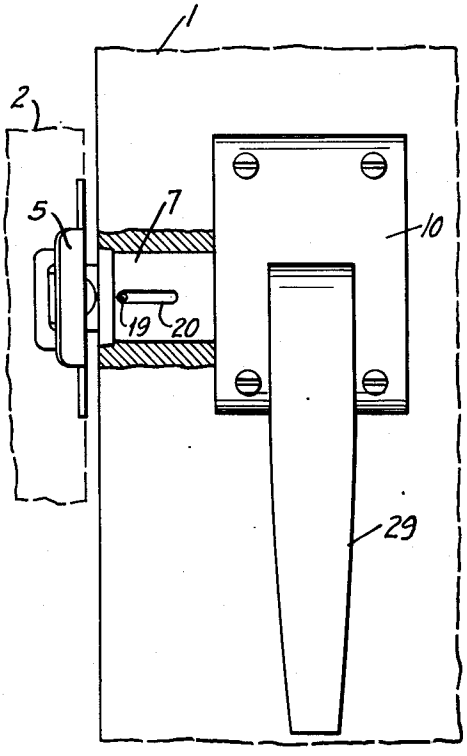

Fig. 3

INVENTOR.
Samuel A. Harkleroad

BY

A. Schapp.

ATTORNEY

Aug. 12, 1952 S. A. HARKLEROAD 2,606,782

DOOR LATCH

Filed Jan. 19, 1948 2 SHEETS—SHEET 2

Fig. 4

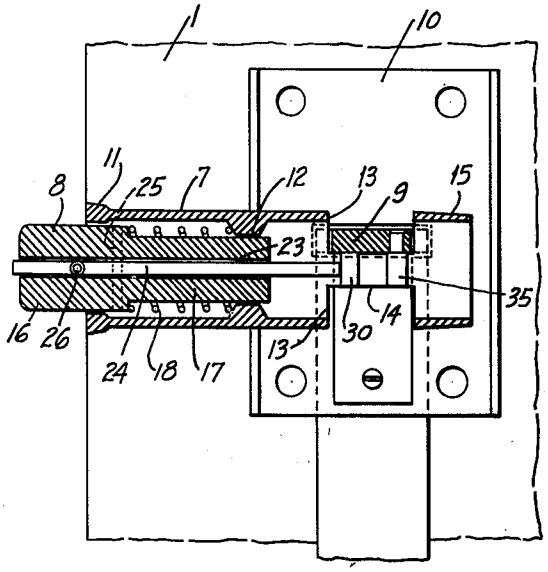

Fig. 5

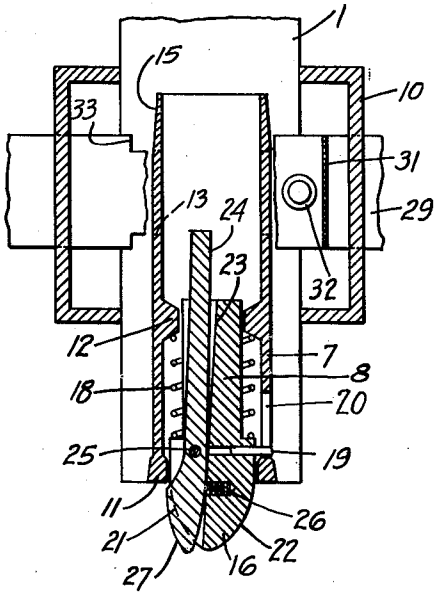

Fig. 6

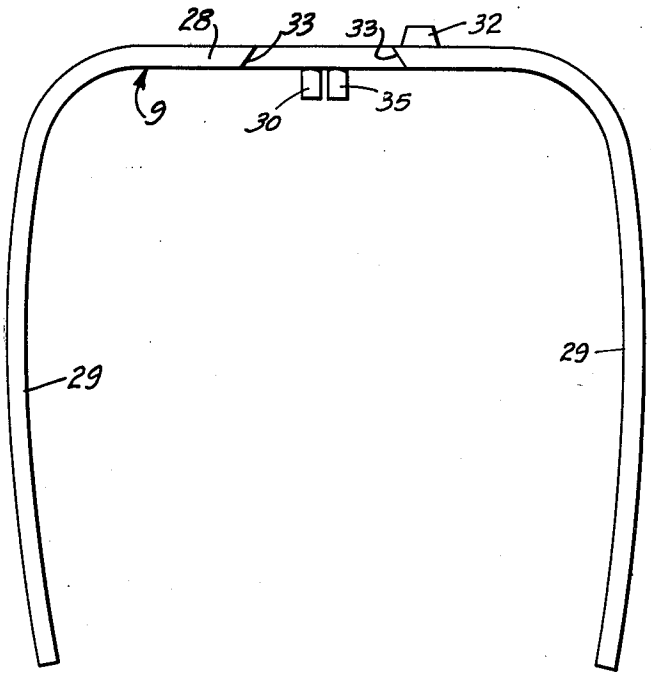

INVENTOR.
Samuel A. Harkleroad
BY
A. Knapp
ATTORNEY

Patented Aug. 12, 1952 2,606,782

UNITED STATES PATENT OFFICE

2,606,782

DOOR LATCH

Samuel A. Harkleroad, Fairfax, Calif.

Application January 19, 1948, Serial No. 3,004

7 Claims. (Cl. 292—74)

1

The present invention relates to improvements in door latches adapted for use in connection with swinging doors, and its principal object is to provide a door latch that is simple in construction, easy to operate, even by handicapped persons, attractive in appearance and in which the parts are so arranged that they do not need any adjustments and are not liable to get out of order.

More particularly it is proposed to provide a door latch with opposing handles constructed in such a manner that a push on one handle or a pull on the other handle will serve to automatically release the latch mechanism, so that the release of the latch and the opening of the door may be effected in one continuous operation.

It is further proposed to use a latch bolt the front end of which is tapered in two ways so that the strike plate provided in the door frame will cause the bolt to retract when the door is opened as well as when the door is closed.

It is further proposed to provide a latch mechanism in which the bolt is normally locked in advance position but is released for retracting movement by the strike plate of a door closing movement and by a straight movement of one of the handles toward the door or that of the other handle away from the door on a door opening movement.

It is further contemplated in the present invention to use handles in the form of straps projecting downwardly from a common support on opposite sides of the door, the handles being formed as integral parts of the support and the latter serving as a door latch releasing means.

It is a further feature of the invention to provide a floating support for the handle unit whereby the same is made to move in a horizontal direction without binding regardless of any tilting effect produced in the operation of the handles.

Further objects and advantages of my invention will appear as the specification proceeds, and the novel features of my invention will be fully defined in the claims attached hereto.

The preferred form of my invention is illustrated in the accompanying drawing, in which

Figure 1 shows a top plan view of a door having my latch mechanism incorporated therein, with a cooperative portion of the door frame shown in section,

Figure 2, a fragmentary front view of the door with my latch mechanism,

Figure 3, a fragmentary side view of the door with my latch mechanism, portions being shown in section,

2

Figure 4, a vertical section taken along line 4—4 of Figure 2,

Figure 5, a horizontal section taken along line 5—5 of Figure 2, and

Figure 6, a detail view, in front elevation, of an operating member used in my latch mechanism.

While I have shown only the preferred form of my invention, I wish to have it understood that various changes and modifications may be made within the scope of the claims attached hereto without departing from the spirit of the invention.

Referring to the drawings in detail, Figure 1 shows a front portion of a door 1, which for the purposes of the present invention may be considered as being hinged at its rear edge, in closed position with respect to a door frame 2. The latter is formed with the usual latch socket 3 and with a strike plate 4 which distinguishes from the conventional strike plate insofar as it has two rearwardly inclined lips 5 and 6, one projecting outside the frame and the other into the socket.

My latch mechanism is mounted in the outer edge of the door for cooperation with the strike plate and comprises in its principal features a barrel 7 mounted in the door horizontally and on a level with the strike plate, a bolt or plunger 8 slidable in the barrel, an operating element 9 shown in detail in Figure 6, and escutcheons 10 mounted upon opposite faces of the door.

The barrel 7 is cylindrical in form, has a slightly thickened front end 11 and is formed with an internal annular shoulder 12 intermediate its ends. Between the shoulder and the rear end the barrel has two opposing recesses 13, leaving relatively narrow strips 14 between the same. Only one of the recesses is used in a completely operative device, the second recess merely serving the purpose of making the latch mechanism reversible for use in connection with doors swinging in opposite directions. The extreme rear end of the barrel is preferably made slightly conical as at 15 to facilitate insertion of the barrel into a suitable door opening from in front.

The bolt 8 is slidable in the barrel and has a head 16 with an easy sliding fit in the front end of the barrel and a rear section 17 of reduced diameter to have a sliding fit in the aperture defined by shoulder 12. The bolt is urged forward in the barrel by means of a spring 18 and is held against turning movement by means of a small pin 19 projecting into a longitudinal slot 20 in the

cylinder. The latter slot also limits the endwise movement of the bolt in either direction.

The head of the bolt is tapered on opposite sides of a vertical center plane, and for the purpose of this invention these tapers will be referred to as the forward taper 21 which strikes the lip 5 on a door closing movement, and the rearward taper 22 which strikes the inner lip 6 on a door opening movement.

The bolt is formed, in its forward face, with a deep groove 23 which extends through the entire length of the bolt, the bottom of the groove starting at the vertical central plane at one side of the front end of the bolt and growing slightly in depth toward the rear end of the bolt. A lever 24 is pivoted in this groove on a vertical pin 25 with a certain amount of freedom of swinging motion, a spring 26 serving to urge the front end of the lever forward and the rear end toward the bottom of the groove.

The front end of the lever is formed with a cam 27 which, in the normal position, projects outward of the forward taper 21 of the bolt head but which, when striking the lip 5 on a door closing movement, retracts to within the confines of the taper and swings the rear end of the lever away from the bottom of the groove. The rear end of the lever projects beyond the rear end of the bolt sufficiently far to overhang the recess 13 of the barrel.

The operating element 9 is made to cooperate with the lever 24 in normally locking the bolt against rearward movement. It is made in the form of a U-shaped strap of metal comprising a base 28 extending transversely through the barrel 7 at the recess 13 and through the two escutcheons 10 with freedom of sliding motion, and two legs 29 depending from the base in parallel relation to one another and on opposite sides of the door to form handles for the base as well as for the door itself.

The base has a pin 30 projecting downwardly therefrom and this pin normally bears on the rear end of the lever 24 to prevent the latter and the bolt from retracting. If, however, the cam 27 at the front end of the lever strikes the lip 5 on a door closing movement it swings the rear end of the lever to clear the pin and then allows the lever and the bolt to retract. On the other hand, if the operating element 9 is moved by operation of either of the handles 29, the pin 30 is made to clear the rear end of the lever and allows impact of the rear taper 22 of the bolt with the lip 6 of the striking plate to retract the bolt on a door opening movement.

The operating element 9 is normally held in bolt locking position by means of a leaf spring 31, one end of which is anchored to the right-hand escutcheon 10 (see Figure 2), above the operating element, and the lower end of which is tensioned to bear on a projection 32 rising from the base 28 of the operating member and to urge the operating member to the left and the pin 30 into bolt locking position. The total travel of the operating element is limited by a recess in the base of the latter element which forms shoulders 33 bearing on the outside of the barrel at the end of each travelling movement.

It will be noted that the leaf spring 31 has a slight inward bend, toward the door, as seen in Figure 2. If the handle 29 on the right side of the door is pulled outward, for opening the door, the projection 32 causes the free end of the leaf spring to swing toward and across center with respect to its anchoring point and to exert downward pressure on the base of the operating element. This keeps the latter in free floating condition even though the operator should grip the handle rather low and exert tilting pressure on the operating element on a door opening movement.

This effect is augmented by a complementary leaf spring 34 mounted in the opposing escutcheou 10. This spring is anchored below the operating element and has a free end bearing on the lower face of the latter and is bent outwardly to exert a lifting effect on the left side of the base 28 to insure free floating movement of the operating element.

The base 28 of the operating element has a second pin 35 projecting therefrom. This pin serves no function when the latch mechanism is installed as shown, but assumes the function of the pin 30 when the mechanism is installed in a door swinging in the opposite direction.

The operation of my invention may be described as follows. Figure 1 shows the door as being mounted for opening on a right-hand swinging movement and the other figures are drawn on the same assumption. The door is shown as being closed, with the forward end of the bolt in the latch socket 3. The bolt is locked against retracting movement by the pin 30 bearing upon the rear end of the lever 24.

To open the door, the operator merely pulls on the right handle 29 or pushes on the left handle 29 which causes the pin 30 to clear the lever 24 and which allows the bolt 8 to be retracted by engagement of the taper 22 with lip 6 of the strike plate. As, upon further door movement, the engagement of the bolt with the strike plate ceases, the bolt automatically projects forward again under the influence of the spring 18. After the operator releases the handle, the leaf spring 31 automatically returns the pin 30 into bolt locking position.

When the door is moved into closing position, the cam 27 of the lever 24 strikes the lip 5 of the strike plate and the lever is swung on its pivot 25 to cause its rear end to clear the pin 30. This allows the bolt to retract upon impact of its advance taper 21 with the lip 5 and allows the door to close. After the door has reached closed position, the bolt projects forward again under the influence of the spring 18 into the socket 3 to engage lip 6, and the lever 24 swings back to normal locking position under the influence of its spring 26.

I claim:

1. A latch mechanism for a swinging door, comprising a barrel, a bolt slidable therein and having a tapered end face, means tending to advance the bolt, a lever pivoted in the bolt and having a forward face normally projecting beyond the tapered face and having a rear end projecting rearwardly beyond the bolt, an operating member extending through the barrel behind the bolt with freedom of sliding motion and so as to project beyond both sides of the barrel, and a pin projecting from the operating member so as to normally bear on the rear end of the lever for locking the bolt in advanced position, the forward end of the lever being operable by impact with a strike plate for releasing the rear end of the lever from the locking means.

2. A latch mechanism for a swinging door, comprising a barrel, a bolt slidable therein and having a tapered end face, means tending to advance the bolt, an operating member extending through the barrel behind the bolt with freedom

of sliding motion and so as to project beyond both sides of the barrel, a pin projecting from the operating member, and means pivotally mounted with respect to the bolt and normally bearing on the pin for locking the bolt in advanced position, the said means being operable by impact with a strike plate for freeing itself from bearing contact with the pin.

3. A latch mechanism for a swing door, comprising a barrel, a bolt slidable therein and having a tapered end face, means tending to advance the bolt, an operating member extending through the barrel behind the bolt with freedom of sliding motion and so as to project beyond both sides of the barrel, a pin projecting from the operating member, and means pivotally mounted with respect to the bolt and normally bearing on the pin for locking the bolt in advanced position, the said means being operable by impact with a strike plate for freeing itself from bearing contact with the pin, and the operating member having means for limiting its movement with respect to the barrel in either direction.

4. Operating means for a door latch, comprising an elongated strap of material bent intermediate the length thereof to present a straight base movable transversely of the door and a leg depending from the base on one side of the door, the base having a pin depending therefrom intermediate its length to serve as a barrier for a retractable latch element, and the base having stops on opposite sides of the pin for coaction with a fixed latch element in limiting transverse movement of the pin with respect to the said element.

5. Operating means for a door latch, comprising an elongated strap of material bent intermediate the length thereof to present a straight base movable transversely of the door and a leg depending from the base on one side of the door, the base having a narrowed section intermediate the length thereof adapted for transverse sliding movement in a latch barrel and forming opposing shoulders engageable upon the outside of the barrel for limiting the sliding movement, and the base having a pin depending from the narrowed section intermediate the shoulders adapted to serve as a barrier for a latch element mounted retractably in said barrel.

6. Operating means for a latch mechanism adapted for mounting in a door, comprising an escutcheon adapted for mounting upon one face of the door and having a slot therein, an operating member for the latch mechanism comprising a flat strap having a horizontal section mounted for transverse sliding movement in said mechanism and in the slot and a vertical section depending downwardly from the horizontal section outside the escutcheon whereby the horizontal section may be moved in one direction by operation of the vertical section with a tilting effect and a binding effect in the slot, and a leaf spring having one end anchored in the escutcheon and having a free end bearing on the horizontal section so as to counteract the binding effect.

7. Operating means for a latch mechanism adapted for mounting in a door, comprising a pair of escutcheons adapted for mounting upon opposite faces of the door and having registering slots therein, an operating member for the latch mechanism comprising a flat strap having a horizontal section mounted for transverse sliding movement in said mechanism and in the slots and vertical end sections depending downwardly from the horizontal section on opposite sides of the door and the escutcheons, whereby the horizontal section may be moved in one direction by a pull on one of the end sections or a push on the other end section, with a tilting effect and a binding effect in the slot, and leaf springs anchored in the escutcheons and having free ends bearing on the horizontal section so as to counteract the binding effect.

SAMUEL A. HARKLEROAD.

REFERENCES CITED

The following references are of record in the file of this patent:

UNITED STATES PATENTS

Number	Name	Date
980,630	Granger	Jan. 3, 1911
1,486,552	Swanson	Mar. 11, 1924
2,121,531	Murphy	June 21, 1938

FOREIGN PATENTS

Number	Country	Date
430,369	Great Britain	June 18, 1935