June 1, 1943. T. A. READ 2,320,887

ELECTROMECHANICAL VIBRATOR

Filed July 24, 1941

Fig. 1.

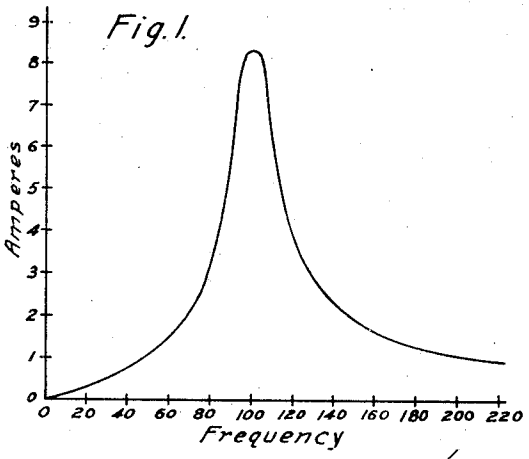

Fig. 2.

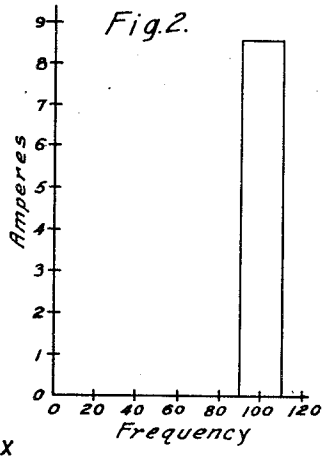

Fig. 3.

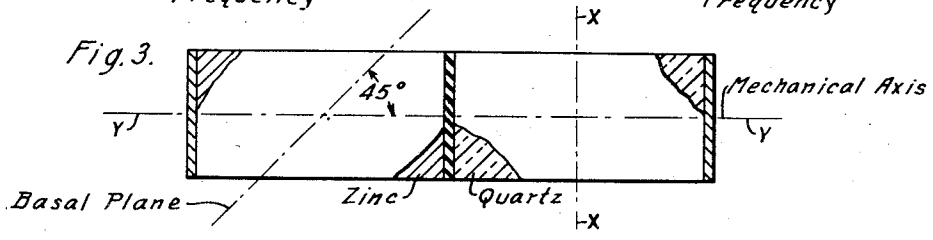

Fig. 4.

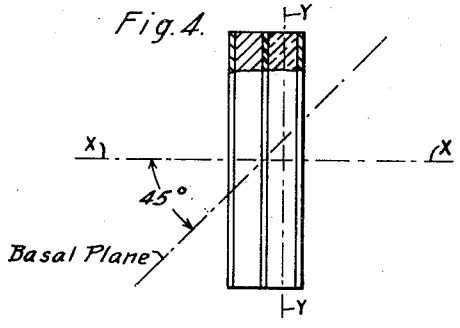

Fig. 5.

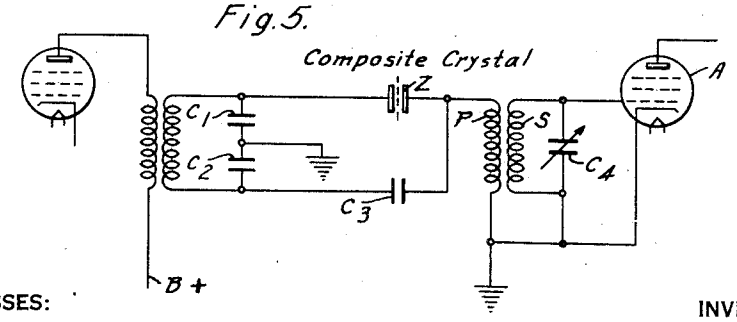

WITNESSES:

N. F. Susan.

Wm. E. Groome

INVENTOR

Thomas A. Read.

BY F. W. Lyle.

ATTORNEY

Patented June 1, 1943 2,320,887

UNITED STATES PATENT OFFICE

2,320,887

ELECTROMECHANICAL VIBRATOR

Thomas A. Read, Scarsdale, N. Y., assignor to Westinghouse Electric & Manufacturing Company, East Pittsburgh, Pa., a corporation of Pennsylvania

Application July 24, 1941, Serial No. 403,889

9 Claims. (Cl. 171—327)

My invention relates to electro-mechanical vibrators and, in particular, relates to vibrators of this type which are adapted for determining the frequency of alternating current in electrical circuits. Arrangements in which a crystal of quartz or other material is embodied in the circuit of grid-controlled electron tubes and determines the frequency of radio currents flowing therethrough are well known, and my invention is applicable, among other things, as a substiture for such quartz vibrators.

One object of my invention is to produce an electro-mechanical or piezo-electric vibrator which shall have a relatively low and nearly constant impedance over a predetermined band of frequencies and which shall have a much higher impedance outside said band of frequencies. This result is obtained by virtue of the rapid increase of the decrement of the piezo-electric vibrator as the current flowing to it increases.

Another object of my invention is to provide a method of tuning an electric circuit so that a resonance curve is attained which rises abruptly at the lower limiting frequency, maintains a nearly constant level until the vicinity of the higher frequency limit is reached and then drops abruptly.

Still another object of my invention is to provide a coupling circuit for superheterodyne and other radio apparatus in which the transmission is much more nearly constant over the desired band of used frequencies, and which has a sharper drop-off at its limiting frequencies than do simple circuits of the prior art.

Another object of my invention is to provide a band-pass filter having a resonance curve much more nearly approaching the form of a rectangle than do the resonance curves of present-day band-pass filters of correspondingly simple construction.

The foregoing and other objects of my invention will become evident upon reading the following specification, taken in connection with the drawing, in which:

Figure 1 illustrates the form of a typical resonance curve showing the variation of electrical response with frequency of a present-day superheterodyne response with frequency of a present-day superheterodyne radio receiver;

Fig. 2 illustrates the form of resonance curve which would be ideal in the operation of such a receiver;

Fig. 3 is a view, partly in elevation and partly in section, of a piezo-electric vibrator in accordance with my invention;

Fig. 4 is an elevational view of a modified form of piezo-electric vibrator embodying my invention, and

Fig. 5 is a schematic diagram of the coupling in one stage of an electron tube amplifier, said coupling embodying my invention.

It is well known that for many purposes, particularly in the radio art, it is desired to obtain electrical circuits which will pass all currents quite readily where they lie within a certain band, or range, of frequencies; but which will transmit very little current when energized by currents of frequency lying outside this band. So-called band-pass filters are an illustration of the type of circuit desired, and these are too well known in the radio art to require description here. One particular field of use of such circuits is in superheterodyne radio broadcast receivers, inasmuch as the necessity for producing music embodying a wide variety of pitches makes it necessary to transmit not only the radio carrier wave, but a band of frequencies differing therefrom by the frequency of the highest-pitch sound in the music being reproduced.

In designing such electrical circuits, it is customary to plot curves of the type shown in Fig. 1 in which frequency of the electric circuit is abscissa and the amplitude of the transmitted current is plotted as the ordinate; and circuits embodying capacitors shunted by pure inductances, or piezo-electric quartz crystals shunted by inductances, are found to give response curves of the general type of Fig. 1. It will be noted that while such curves roughly delimit a band of frequencies throughout which energy is freely transmitted, the amplitude of the transmission is by no means independent of the frequency throughout this band. The ideal form of resonance curve would be that shown in Fig. 2 in which the transmission is substantially zero below the lower marginal frequency and also above the higher marginal frequency, and is substantially constant between said marginal frequencies. In short, the ideal response curve is substantially rectangular in form.

I have discovered that by making a composite piezo-electric oscillator, or electro-mechanical vibrator, in which a portion cut from a single crystal of zinc is cemented or otherwise connected mechanically to a quartz crystal in the manner indicated by Figs. 3 and 4, an electro-mechanical vibrator is produced which can be substituted for the now-known quartz crystal in an electrical

filter circuit, and which will have a response curve much more nearly approximating the ideal type of Fig. 2 than does the curve obtained where quartz crystals alone are used.

Thus, in accordance with principles of my invention, I cement to one face of a quartz crystal of the type now well known for control of electrical oscillations a body cut from a single crystal of metallic zinc. A method of producing single crystals of metallic zinc is described by C. A. Cinnamon, beginning at page 187 of the Review of Scientific Instruments, volume 5, 1934. The Cinnamon article describes the method of producing a single zinc crystal with a basal plane in any desired direction. In accordance with my invention, I cut from such a single zinc crystal a cylinder having its longitudinal axis at 45 degrees to the basal plane. While the relationship of the basal plane just mentioned is not absolutely required for proper operation of my composite element, I have found it preferable for many cases to employ this relationship. I then cut from a piece of quartz a cylinder which may be of the same dimensions as the zinc piece just described, the electric axis of the quartz crystal being preferably perpendicular to the longitudinal axis of the quartz cylinder. I then cement one end of the zinc cylinder to one end of the quartz cylinder by some suitable agent, such, for example, as De Khotinski cement which is well known in glass-blowing art. Electrodes, to which the electrical connections are made are then affixed to the faces of the quartz crystal which are perpendicular to the electric axis. These electrodes are formed of metal, such, for example, as silver, by electro-deposition or by the chemical methods used in manufacturing mirrors, such methods being too well known to require description here.

The composite element just described is then connected into an electric circuit, such, for example, as that illustrated in Fig. 5, or in any of the circuits which are now well known in the electrical art for employing quartz piezo-electric crystals.

The arrangement shown in Fig. 3 I have found to be preferable where the axis of the zinc cylinder is greater in length than its diameter, the crystal axes having the directions indicated in this figure. For certain frequencies, it is more desirable that the axial length of the quartz crystal shall be smaller than its diameter. In such cases, of which Fig. 4 is illustrative, I make the Y—Y axis of the quartz perpendicular to the axis of the cylinder, the electrical X—X axis of the quartz being preferably coincident with the latter. I then cut out from a single zinc crystal a cylinder preferably of the same dimensions as the quartz and having its basal plane at 45 degrees to its shortest dimension. I attach the zinc and the quartz crystal to each other and provide them with conducting terminal-faces in the same way as has been described in connection with Fig. 3.

In both Fig. 3 and Fig. 4, the cross-sections of the cylinder may be square or, alternatively, may be circular or of other geometrical shape, so long as a cylindrical form is retained.

Fig. 5 illustrates an electrical circuit forming one stage of coupling of a radio amplifier. An input circuit supplies alternating current through the primary winding of an input transformer, the secondary winding of which is shunted by a pair of capacitors C_1 and C_2, the mid-point of which is preferably grounded. One terminal of the secondary winding is connected through a capacitor C_3 to the primary winding P of a second transformer. The other terminal of the secondary winding is connected to one terminal plate of a composite crystal Z, such as I have described in connection with Fig. 3, the other terminal plate being connected to the lead connecting capacitor C_3 to the primary winding P. The other terminal of the primary winding P is preferably grounded. The secondary winding S which cooperates with the primary winding P is shunted by a capacitor C_4 and has one terminal grounded. The other terminal is connected to the control grid of an amplifier tube A which feeds power in conventional ways to any desired output circuit.

To illustrate my invention more fully, I will state that the capacitors C_1 and C_2 each may be approximately 100 micro-microfarads. The capacitor C_3 may be approximately 10 to 100 micro-microfarads, its value being such as to balance the capacity between the electrodes in the vibrator Z. The capacitor C_4 and the secondary winding S are tuned substantially to the frequency midway between the operative limits of the response curve of the composite crystal.

Referring to Fig. 3, the zinc member and the quartz member may each be a cylinder approximately one-half an inch long and one-quarter inch square. Such a composite member would have a passing-band extending from approximately 200,000 cycles to 202,000 cycles per second.

Referring to Fig. 4, the quartz plate and the zinc plate may each be approximately $\frac{1}{8}$th of an inch thick and one inch square.

While I have described my invention as embodying a quartz crystal in conjunction with the zinc member, it will be recognized by those skilled in the art that other well known piezo-electric materials may be substituted for the quartz when conditions make such other material more desirable. It will also be recognized that while I have described the use of a member cut from a single crystal of zinc, it may be desirable to substitute portions of single crystals or other forms made up of other metals. It will also be recognized by those skilled in the art that while I have described my electro-mechanical vibrator in connection with radio circuits, it is of application wherever electro-mechanical vibrators or piezo-electric devices having response-curves approximating the rectangle in form are desired.

I claim as my invention:

1. In combination with an electric circuit, an electro-mechanical vibrator comprising a piezo-electric crystal mechanically linked to a single crystal of zinc.

2. In combination with an electric circuit, an electro-mechanical vibrator comprising a piezo-electric crystal mechanically linked to a single crystal of zinc, the basal plane of the zinc crystal being approximately forty-five degrees to the electrical axis of the piezo-electric crystal.

3. In combination with an electric circuit, an electro-mechanical vibrator comprising a quartz crystal mechanically linked to a single crystal of zinc.

4. In combination with an electric circuit, an electro-mechanical vibrator comprising a quartz crystal mechanically linked to a single crystal of zinc, the basal plane of the zinc crystal being approximately forty-five degrees to the electrical axis of the quartz crystal.

5. A mechanical structure comprising a single zinc crystal mechanically linked to a piezo-electric crystal.

6. A mechanical structure comprising a single

zinc crystal mechanically linked to a piezo-electric crystal, the basal plane of the zinc crystal being at forty-five degrees to the electric axis of the piezo-electric crystal.

7. A mechanical structure comprising a cylinder cut from a single crystal of zinc mechanically connected at one end to a cylinder of crystalline quartz.

8. A mechanical structure comprising a cylinder cut from a single crystal of zinc mechanically connected at one end to a substantially similar cylinder cut from a piezo-electric crystal.

9. A mechanical structure comprising a cylinder cut from a single crystal of zinc mechanically connected at one end to a substantially similar cylinder cut from a piezo-electric crystal, the basal plane of the zinc being at forty-five degrees to the cylindrical axis.

THOMAS A. READ.