No. 758,074. PATENTED APR. 26, 1904.

S. HOLMES.

TANK STEAMER.

APPLICATION FILED DEC. 26, 1903.

NO MODEL.

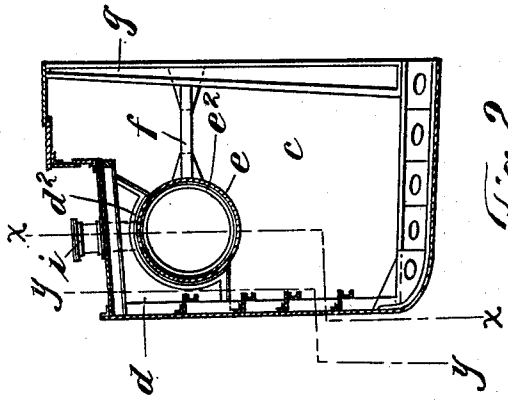

Fig. 2.

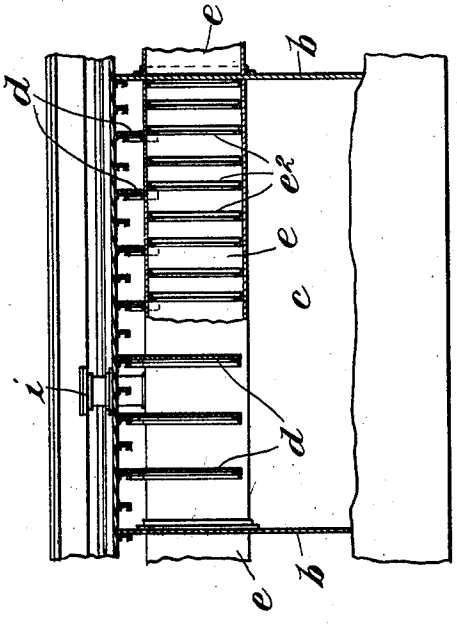

Fig. 1.

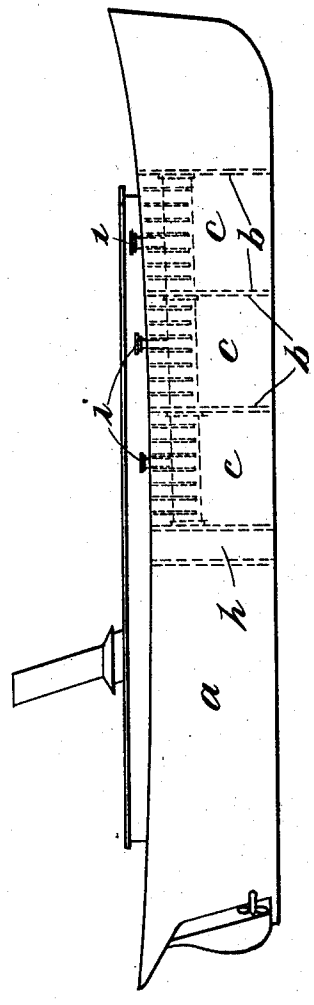

Fig. 3.

WITNESSES

A. C. Smattingly

F. A. Sturart

INVENTOR

Samuel Holmes

BY Edgar Tate & Co.

ATTORNEYS

THE NORRIS PETERS CO., PHOTO-LITHO., WASHINGTON, D. C.

No. 758,074. Patented April 26, 1904.

UNITED STATES PATENT OFFICE.

SAMUEL HOLMES, OF NEW YORK, N. Y.

TANK-STEAMER.

SPECIFICATION forming part of Letters Patent No. 758,074, dated April 26, 1904.

Application filed December 26, 1903. Serial No. 186,564. (No model.)

To all whom it may concern:

Be it known that I, SAMUEL HOLMES, a subject of the King of Great Britain, residing at New York, in the county of New York and State of New York, have invented certain new and useful Improvements in Tank-Steamers, of which the following is a specification, such as will enable those skilled in the art to which it appertains to make and use the same.

This invention relates to what are known as "tank-steamships" for carrying petroleum and other liquids in bulk; and the object of the invention is to provide means whereby an ordinary trading vessel or cargo steamer may be quickly and cheaply converted into a tank steamer or vessel and reconverted when desired into its original form for ordinary freight purposes.

It is a well-known fact that an ordinary tank vessel will not carry her full capacity of oil or other liquid, and it is advantageous to spread the liquid cargo as far in a fore-and-aft direction as possible to prevent the vessel from straining her hull at sea, which frequently results if the cargo is accumulated in one place instead of being distributed, as it should be, fore and aft. I accomplish this result by fitting a steel-plate tube under the deck-beams at each side of the hull to reduce the bulk of the liquid-cargo space. These tubes form a strong method of construction, for the reason that they strenghen what is now the weakest part of the hull construction, the connection between the tubes and the vessel's sides and deck being made by means of plate-knees, which securely tie the deck-beams and side frames of the vessel together, while also serving to hold the tubes in place. These tubes may easily be fitted either in a new or an old vessel and form a cheap mode of constructing a steamship-tanker to carry petroleum or other liquid in bulk.

The invention is fully disclosed in the following specification, of which the accompanying drawings form a part, in which the separate parts of my improvement are designated by suitable reference characters in each of the views, and in which—

Figure 1 is a longitudinal section of a part of one side of the hull of a vessel provided with my improvement and taken on the lines $x\,x$ and $y\,y$ of Fig. 2; Fig. 2, a transverse section of one-half of the hull of the vessel, and Fig. 3 a side view of the vessel complete.

In the drawings forming part of this specification I have shown at a, Fig. 3, the side of a vessel provided with my improvement, in Fig. 2 a transverse section of one-half of the hull of said vessel, and in Fig. 1 a longitudinal section of that part of the hull shown in Fig. 2. Tank vessels or steamers of this class as usually constructed are provided with transverse bulkheads b, whereby separate compartments c are formed, in which compartments the liquid cargo is placed, and in the practice of my invention I secure to the deck-beams and side frames at the opposite sides of the vessel knees d, which are much larger than the ordinary knees employed and which may be substituted for said ordinary knees or which may be used in connection therewith, or the knees d may be applied to the alternate ordinary knees. The knees d are provided in their inner edges with a segmental recess d^2, equal to about one-half a circle in the form of construction shown, and each of the compartments c is provided with a steel or other metal tube e, set into the recesses d^2 of the knees d and secured therein in any desired manner and also secured, if desired, to the bulkheads b, and said tubes are also provided with a brace or braces f, which bear on the inner side thereof, and also has a bearing on the central vertical partition g, which extends longitudinally through the hull of a vessel, and the braces f may be so made as to hold the tubes e in place.

The tubes e may be made in any desired manner, but are preferably made of boiler-iron and in a manner similar to an ordinary boiler and provided internally with reinforcing bands or stays e^2, so as to give the required strength and rigidity thereto. These tubes e are preferably from eight to twelve feet in diameter, the diameter thereof depending on the size or capacity of the compartments c and of course on the size of the vessel, and said tubes take up, as will be apparent, a large amount of the space in the compartments c, and the capacity of the said compartments is thus diminished by reason thereof in order to

distribute the cargo fore and aft in the hull of the vessel.

In the form of construction shown the tubes *e* are circular in cross-section; but said tubes may be of any desired shape in cross-section, either circular, oval, rectangular, or of any preferred shape, and said tubes are entirely surrounded by the liquid cargo within the compartments *c*.

At the present time it is customary to cut the side frames of a vessel and form a closed alley-way between said side frames and the deck of the vessel extending fore and aft for the purpose of reducing the tank-space, as herein described; but this is an expensive operation and involves much greater expense, time, and labor than by means of my improved process of construction. With my improvement it is not necessary to cut the side frames, and the knees *d*, together with the tube or tubes *e*, may be removed whenever it is desired to change the vessel into an ordinary trader and may be placed in position whenever it is necessary to convert an ordinary trader into a tank-ship, and the expense of these operations is much less than with the construction usually employed, and the hull of the vessel or the frames thereof are in no way injured, and my improved construction also adds to the strength of the vessel at its weakest point instead of detracting therefrom.

In tank-steamers of the class herein referred to it is customary to place the tanks in the forward part of the hull, and in Fig. 3 of the drawings I have indicated this arrangement in dotted lines, and between the said tanks and the after part of the hull is located the machinery, and between the same and the tanks are placed bulkheads between which is a space *h*, which is filled with water or any other suitable material, all of which is indicated in Fig. 3. The tubes *e* may also be used for the purpose of storing freight of various kinds and classes and for this purpose are provided with manholes *i*, and said tubes may also be used for the purpose of carrying water or other ballast.

Having fully described my invention, what I claim as new, and desire to secure by Letters Patent, is—

1. The herein-described means for forming an alley-way in the sides of the hull of a tank-ship provided with transverse bulkheads, comprising knees placed between the side frames and the deck-beams and horizontal tubes placed in said knees and extending between said bulkheads, substantially as shown and described.

2. The herein-described means for forming horizontal alley-ways in tank-steamers provided with transverse bulkheads which consists in knees secured to the side frames and the deck-beams and provided in their inner edges with segmental recesses, and tubes secured in said recesses and extending between said bulkheads, substantially as shown and described.

3. A tank-steamer, the hull of which is provided with a central longitudinal and vertically-arranged partition, and transverse bulkheads in the longitudinal side tanks so formed, the opposite sides of the vessel being also provided with knees secured to the side frames and deck-beams, and horizontally-arranged tubes supported by said beams between said bulkheads, substantially as shown and described.

4. A tank-steamer, the hull of which is provided with a central longitudinal and vertically-arranged partition, and transverse bulkheads in the longitudinal side tanks so formed, the opposite sides of the vessel being also provided with knees secured to the side frames and deck-beams, and horizontally-arranged tubes supported by said beams between said bulkheads, and pressed in position, substantially as shown and described.

5. The herein-described means for converting a freight-steamer into a tanker, comprising transverse bulkheads secured in the side portions of the hull thereof, knees secured to the side frames and the deck-beams, and tubes secured to said knees and extending between said bulkheads, substantially as shown and described.

In testimony that I claim the foregoing as my invention I have signed my name, in presence of the subscribing witnesses, this 24th day of December, 1903.

SAMUEL HOLMES.

Witnesses:
F. A. STEWART,
C. J. KLEIN.