(No Model.)

A. E. JACOBSON.

BEDSTEAD.

No. 590,265. Patented Sept. 21, 1897.

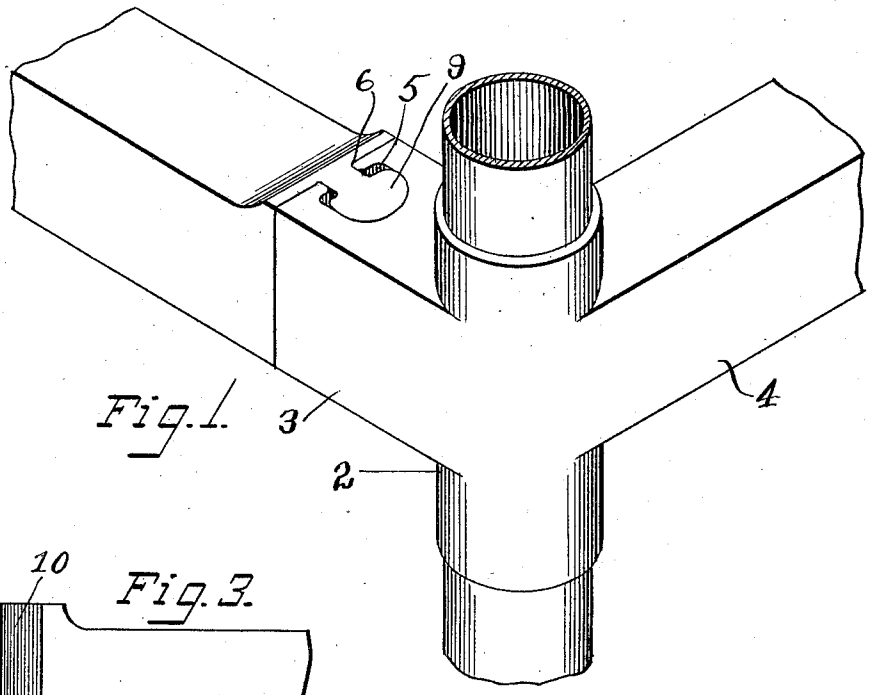

Fig. 1.

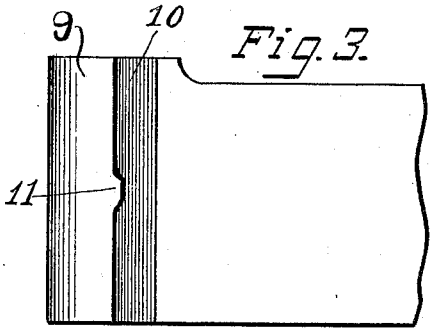

Fig. 3.

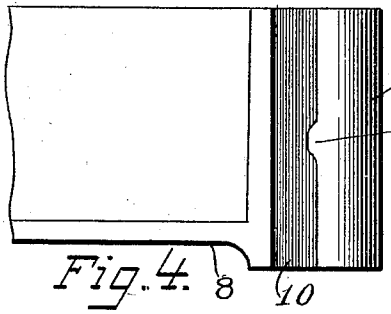

Fig. 4.

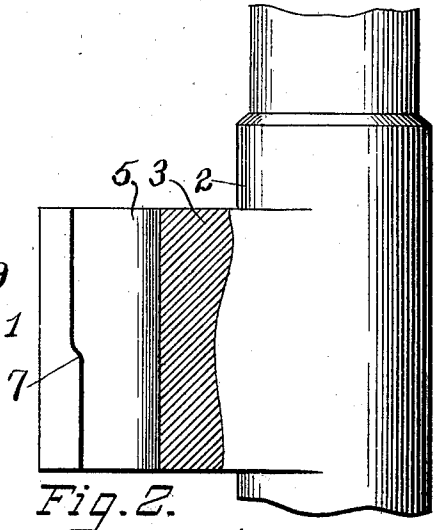

Fig. 2.

Witnesses
B. P. Shepherd
M. C. Cooley

Inventor
Axel E. Jacobson,
By Paul D. Hawley,
his attorneys.

THE NORRIS PETERS CO., PHOTO-LITHO., WASHINGTON, D. C.

UNITED STATES PATENT OFFICE.

AXEL E. JACOBSON, OF MINNEAPOLIS, MINNESOTA.

BEDSTEAD.

SPECIFICATION forming part of Letters Patent No. 590,265, dated September 21, 1897.

Application filed January 28, 1897. Serial No. 621,009. (No model.)

To all whom it may concern:

Be it known that I, AXEL E. JACOBSON, of Minneapolis, Hennepin county, Minnesota, have invented certain new and useful Improvements in Bedsteads, of which the following is a specification.

My invention relates particularly to iron bedsteads; and the object I have in view is to provide a bed which shall be absolutely non-shaking and rigid, and a further object is to provide a bed in which the side rails may be turned over, so that the bed may be used with slats or not, as desired.

My invention consists generally in providing the corner-iron of the bed with a shoulder or projection having a recess or socket to receive a lug or tongue provided on the end of the bed-rail, said socket being provided on its inner surface with a shoulder or projection to engage a similar shoulder provided on the inner edge of the lug on the bed-rail, all as hereinafter described, and particularly pointed out in the claims.

In the accompanying drawings, forming part of this specification, Figure 1 is a perspective of the corner-iron of a bed embodying my invention. Fig. 2 is a side elevation of the same, a portion of the shoulder being broken away, showing the interior of the socket. Fig. 3 is a side elevation of a portion of the bed-rail, looking at one side thereof. Fig. 4 is a similar view looking at the opposite side of the rail.

In the drawings, 2 represents the corner-iron, having the laterally-projecting parts 3 and 4 preferably cast with it and to which the side and end rails of the bed are connected. The part 3 consists, preferably, of a solid shoulder or block provided at its outer end, at the center, with a vertical socket 5, a narrow vertical slot 6, provided in the end of the part 3, leading to the same. The socket 5 is provided on its inner surface, near the inner edge of the vertical slot 6, with a shoulder 7, having an inclined face and extending from a point near the middle of the socket to the lower end thereof, as shown in Fig. 2.

Each end of the bed-rail 8 is provided with a tongue or lug 9, provided at its inner end on each side with a vertical recess 10, into which that part of the shoulder 3 forming the edges of the slot 6 fits when the bed is put together. The outer end of the tongue or lug 9 is enlarged to fill the socket 5 when the parts are placed together, and lugs 11 are provided on said enlarged end to engage the shoulders 7, heretofore described. The edges of the lugs 11 are inclined, so that when they come in contact with the shoulders 7, also inclined, the tongue is firmly wedged into the socket 5 and all shaking and rattling of the bed avoided. The points of contact on the tongue and in the socket 5 are so arranged that the parts will be securely wedged together just at the time when the upper surface of the rail 8 is flush with the upper surface of the part 3, as shown in Fig. 1. The side rails of the bed are preferably of angle-iron, and, when desired, I may turn each rail over, so that one flange will be at the lower edge of the rail in position to receive the ends of the slats and support the same when the bed is in use. The lugs 11 being inclined on both sides it is obvious that the tongue 9 may be wedged into the socket 5, whichever edge of the bed-rail is uppermost, so that the slats may be placed in the bed with their ends resting on the flange at the lower side of the bed-rail, or, if desired, the spring may be placed upon the upper surface of the bed-rail, and when the bed is made in this way the rails would be connected to the corner-iron, as shown in Fig. 1.

Instead of placing the lug on the tongue and the shoulder on the inner surface of the socket I may reverse the construction with equally good results, it being necessary to use care only in fitting the tongue to the socket and in placing the lug and shoulder in the proper position on the tongue and in the socket.

Having thus described my invention, I claim as new and desire to secure by Letters Patent—

1. In a bedstead, the combination with the corner-iron, provided with a socket, of the side rails having a tongue to enter said socket, said tongue being provided with a lug having an inclined surface in position to engage a shoulder also having an inclined surface provided on the inner surface of said socket, for the purpose set forth.

2. The combination, with the corner-iron having a laterally-projecting shoulder pro-

vided with a vertical socket, of a side rail having a tongue to fit into said socket, the latter being provided with a shoulder on its inner surface, and said tongue being provided with a lug to engage said shoulder, for the purpose set forth.

3. In a device of the class described, the combination with the part 2 having the projection 3 provided with the socket 5 and slot 6 leading thereto, of the angled bed-rail having a tongue 9 to slip into said socket, the shoulder 7, the recesses 10 provided in said tongue, and the lugs 11 to engage said shoulders, for the purpose set forth.

In testimony whereof I have hereunto set my hand this 16th day of January, A. D. 1897.

AXEL E. JACOBSON.

In presence of—
RICHARD PAUL,
M. E. GOOLEY.