June 16, 1931. C. H. SCHURR 1,810,408

TRUING AND POSITIONING DEVICE FOR GRINDING WHEELS

Original Filed May 15, 1922 2 Sheets-Sheet 1

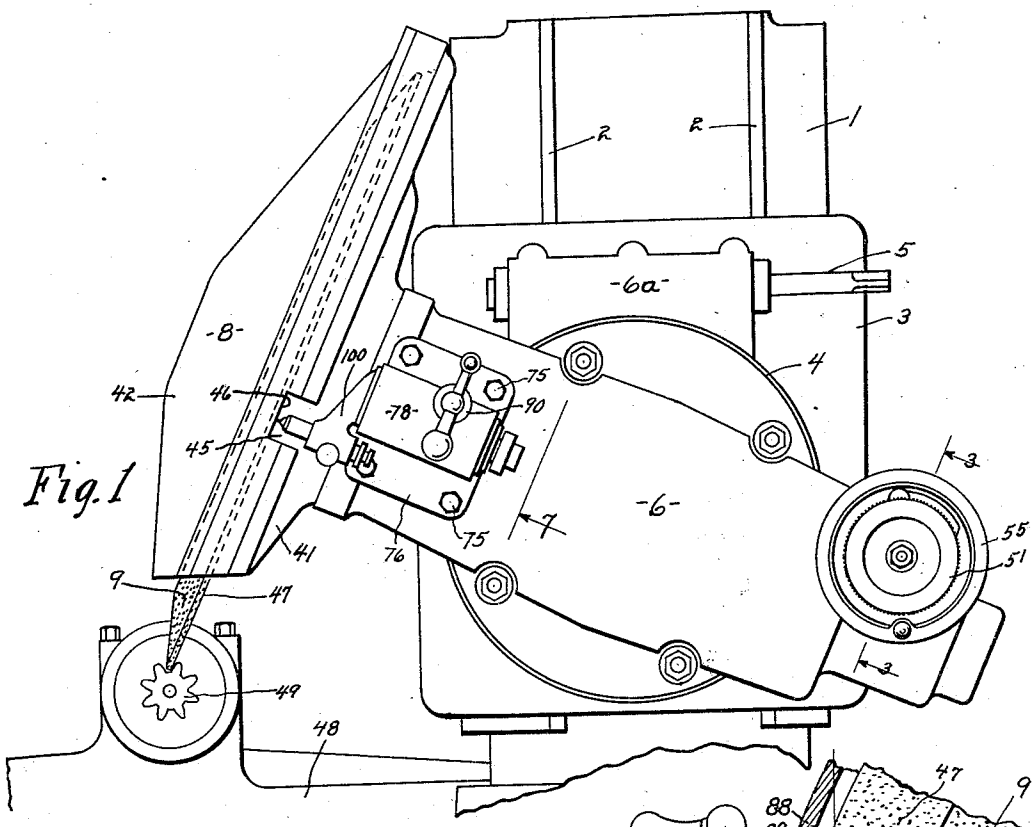

Fig. 1

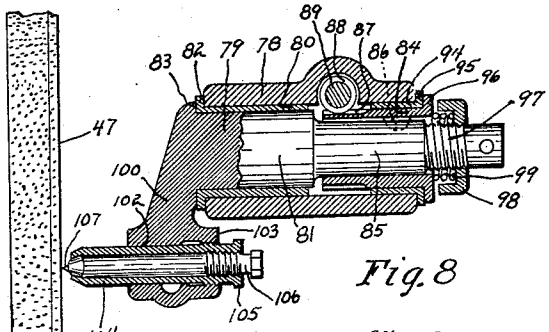

Fig. 8

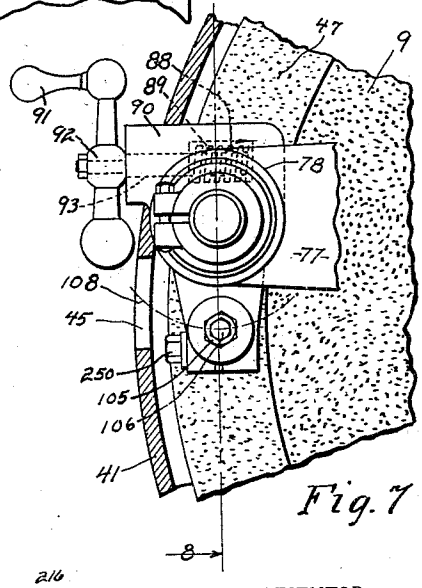

Fig. 7

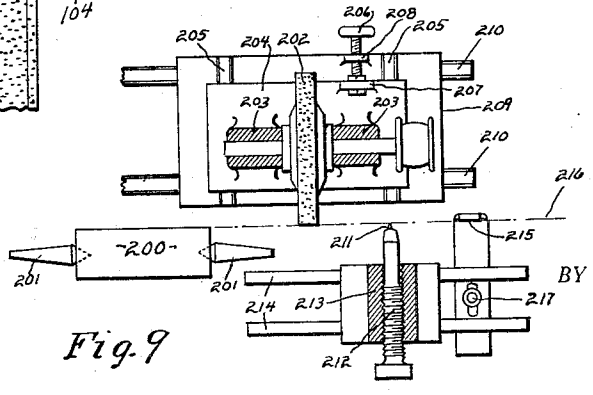

Fig. 9

INVENTOR.
Charles H. Schurr
BY
Harry P. Canfield
ATTORNEY.

June 16, 1931. C. H. SCHURR 1,810,408

TRUING AND POSITIONING DEVICE FOR GRINDING WHEELS

Original Filed May 15, 1922 2 Sheets-Sheet 2

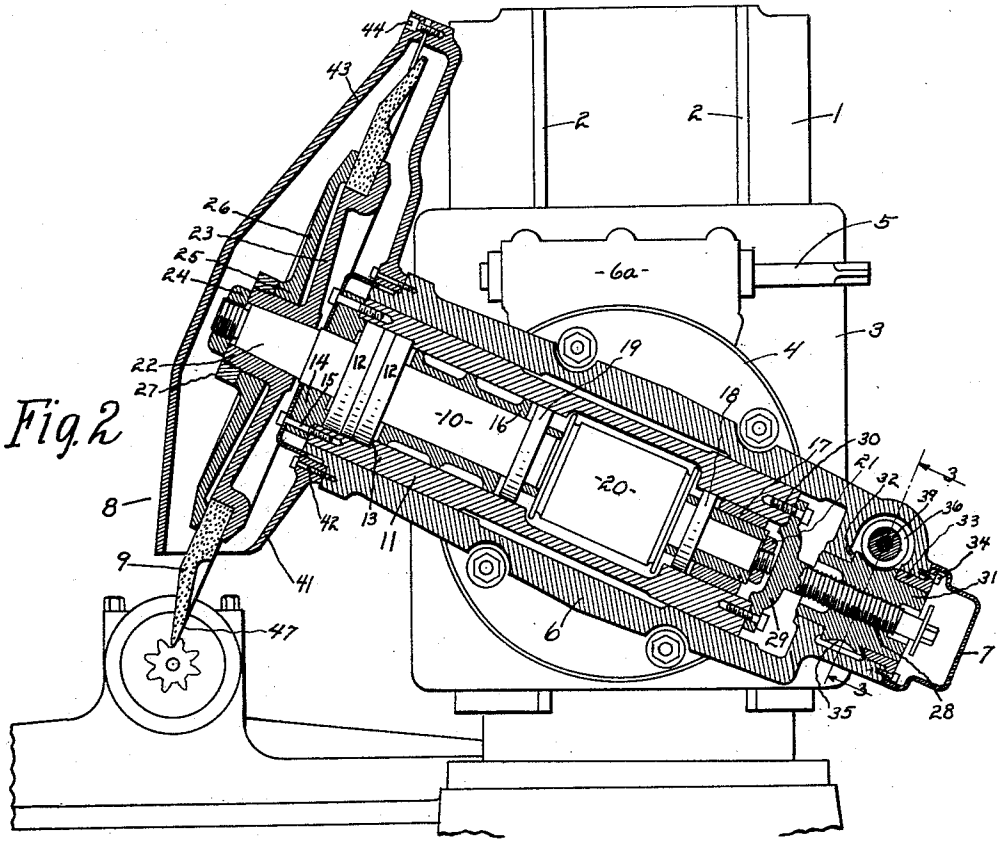

Fig. 2

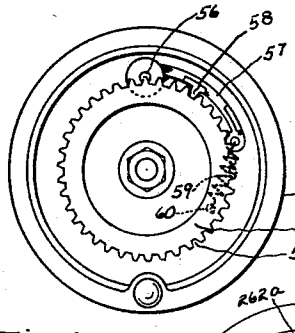

Fig. 4

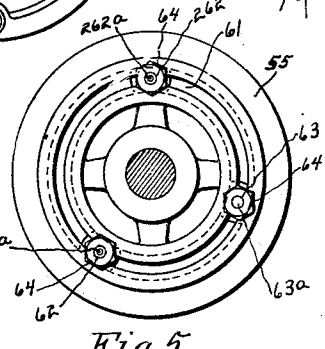

Fig. 5

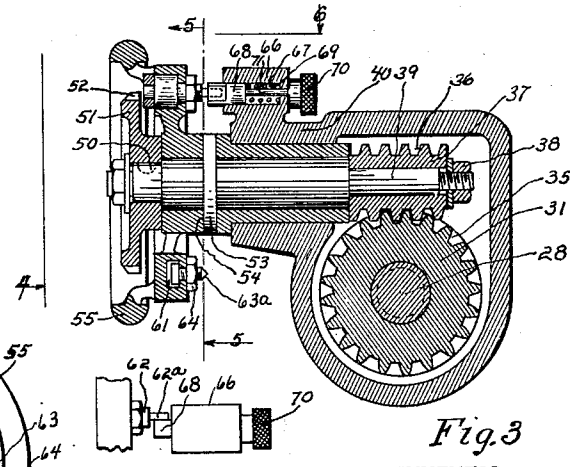

Fig. 3

Fig. 6

INVENTOR.
Charles H. Schurr
BY Harry P. Canfield
ATTORNEY.

Patented June 16, 1931 1,810,408

UNITED STATES PATENT OFFICE

CHARLES H. SCHURR, OF CLEVELAND, OHIO, ASSIGNOR TO THE LEES-BRADNER COMPANY, OF CLEVELAND, OHIO, A CORPORATION OF OHIO

TRUING AND POSITIONING DEVICE FOR GRINDING WHEELS

Original application filed May 15, 1922, Serial No. 561,219, and in Germany May 2, 1923. Divided and this application filed January 14, 1928. Serial No. 246,707.

This invention relates to truing and positioning devices for the grinding wheels of grinding machines.

One of the objects of this invention is to provide means for accurately locating the working surface of the grinding wheel of a grinding machine in a preselected position on the machine whereby it may be given a preselected positional relation to the work to be ground.

Another object is to provide means whereby the working surface of the grinding wheel when once so positioned may, in the operation of the machine, be moved away from said position a known distance corresponding to the amount of material to be ground from the work; and then may be returned accurately to said position by feeding the grinding wheel into the work, thus accurately grinding away the desired amount of material from the work.

Another object is to provide means whereby in positioning the grinding wheel working surface as above stated it may be also dressed to a true surface.

Another object is to provide an improved dressing device in which the dressing element may be accurately returned to or restored to its preselected dressing position in the event of misadjustment or of wear or renewal of the dressing element.

Another object is to provide means by which the working face of a planular faced grinding wheel may be accurately located in coincidence with a plane of preselected position on the grinding machine and accurately restored to or maintained in said position, or positions at known distances therefrom.

Another object is to provide means whereby the planular working face of the grinding wheel may be dressed to coincidence with said preselected plane by moving the wheel into the path of a moving truing or dressing element which has been previously accurately positioned.

Another object is to provide in connection with a grinding machine employing a planular faced grinding wheel, a reference station having a preselected position on the machine with reference to which the planular face of the wheel may be dressed and positionally adjusted and also with reference to which the plane of the end thrust bearing of the grinding wheel shaft may be located; in order to position the face of the wheel in preselected planes on the machine and to minimize or make negligible the displacement of the wheel face from said planes by thermal expansion of the shaft.

Another object is to provide an improved mechanism adapted for use with a grinding machine for truing or dressing the planular face of a grinding wheel, in which the dressing element may be moved accurately in a plane of preselected position by rotating it about an axis of rotation at right angles to said plane.

Another object is to provide means by which the dressing element during the dressing operation may be moved by hand with a steady, uniform movement whereby the dressing element will dress a true even surface on the wheel.

Other objects will be apparent to those skilled in this art from the following description of the invention, taken in connection with the accompanying drawings illustrative thereof, in which:

Fig. 1 is an elevational view of a part of a gear grinding machine showing the invention applied thereto;

Fig. 2 is a side sectional view of the parts of the gear grinding machine shown in Fig. 1 and showing the grinding wheel and position controlling mechanism therefor forming part of the invention;

Fig. 3 is a sectional view taken from the plane 3—3 of Figs. 1 and 2 and drawn to a larger scale;

Fig. 4 is an elevational view of a part of Fig. 3 taken from the plane 4 of Fig. 3;

Fig. 5 is a sectional view taken from the plane 5—5 of Fig. 3;

Fig. 6 is a partial plan view taken from the plane 6 of Fig. 3;

Fig. 7 is an elevational view taken from the plane 7 of Fig. 1, drawn to a larger scale, and with some of the parts broken away;

Fig. 8 is a sectional view taken from the plane 8—8 of Fig. 7;

Fig. 9 is a simplified view, in some respects diagrammatic, of a universal grinding machine showing the invention applied thereto.

The subject matter of this application is divisional from application Serial No. 561,219, filed May 15, 1922, which shows in detail a gear grinding machine embodying the instant invention and reference may be had thereto for a more complete description of those elements which are herein merely indicated in the drawing and briefly described.

Referring to Fig. 1 at 1 is indicated a vertical column having guides 2—2 upon which is mounted, vertically slidable, a slide 3 carrying a head 4 swivelled thereon about a horizontal axis. By means of an adjusting shaft 5 and gear connections not shown but enclosed within a housing 6*a* the head may be swivelled. The head 4 comprises a tubular casing 6 closed at one end by a cap 7 and at the opposite end terminating in a grinding wheel hood 8 and is thus adapted to enclose a grinding wheel 9 and a grinding wheel shaft 10. The tubular arm 6 is bored out to receive an axially movable cylindrical quill 11, which carries therein axially immovable thrust ball-bearings 12 between a shoulder 13 in the quill and a clamp ring 14 bolted thereto by bolts 15. The shaft 10 is held by the bearings 12 against axial movement in the quill 11 and is guided against lateral or radial movement by sleeve bearings 16 and 17 and ball-bearings 18 and 19. A driving pulley 20 is mounted on the shaft 10 to drive it and the ball bearing 19, pulley 20, bearings 18 and 17 are all clamped on the shaft by the nut 21 on the lower end of the shaft. Upon a taper 22, on the upper end of the shaft 10 is mounted a wheel clamp plate 23 held thereon by a nut 24 and on the hub 25 thereof is mounted a second clamp plate 26 held thereon by a nut 27 and between the plates 23 and 26 is clamped the grinding wheel 9. Whereas the shaft 10 rotates within the quill 11, the quill and the shaft are movable together axially within the tubular arm 6 by the following means, Figs. 1 and 3. An adjusting screw 28 terminating on one end in a flanged head 29 is bolted at 30 to the lower end of the quill 11 and is threaded into a nut 31 anchored against axial movement, but free to rotate, between a shoulder 32 on the tubular arm 6 and a clamp ring 33 in the lower end of the tubular arm 6 secured thereto by bolts 34. By turning the nut 31 the screw 28 adjustably propels the quill 11 axially and holds it in any adjusted position. To turn the nut 31, worm wheel teeth 35 are provided on the cylindrical periphery of the nut 31 in mesh with the teeth 36 of a worm 37 secured by a nut 38 on a worm shaft 39, the worm and worm shaft being rotatably supported in a tubular extension 40 on the hollow arm 6. The rotation of the worm shaft 39 is adapted to be controlled by means to be described for accurately positioning the quill in the arm 6 and therefore accurately positioning the grinding wheel 9.

The grinding wheel hood 8 on the upper end of the tubular arm 6 is composed of a hood portion 41 bolted as at 42 to the arm 6 and of a hood portion 43 bolted as at 44 to the portion 41. In the hood portion 41 as shown in Fig. 1 a doorway 45 is provided, forming a free passageway from the inside to the outside of the hood 8, and having a wall 46 preferably in a plane at right angles to the axis of the shaft 10, the wall 46 being connected by the rigid hood portion 41 to the arm 6 serves as a reference station and occupies a certain predetermined positional relation to the machine as a whole and to the end thrust bearings 12 for operative purposes to be described.

The grinding wheel 9 in the particular embodiment of the invention under consideration, has a planular face 47 and is adapted to grind the profiles of gear teeth. In Fig. 1 is shown at 48 a slide mounted for horizontal reciprocation (to the right and left as illustrated) and carrying a gear 49 to be ground. By means not shown but well known in the art, as the slide 48 reciprocates the gear 49 rolls on its pitch circle and the teeth faces thereof engage the grinding wheel planular face 47 with an involute generating movement.

Referring to Figs. 3 to 6 inclusive, means for accurately controlling the above described axial movement of the grinding wheel shaft 10, and therefore of the planular face 47 of the griding wheel 9, is shown. Keyed on the worm shaft 39 by a key 50 is a wheel 51 having notches or tooth spaces 52. Rotatably mounted on the shaft 39 and anchored against axial movement thereon between a collar 53 on the shaft and a face 54 on the wheel 51 is a hand wheel 55 carrying pivoted thereto at 56 a toothed pawl 57 having a tooth 58 adapted to enter the notches 52 and adapted to be held therein by a tension spring 59 extending from the end of the pawl 57 to a connection point 60 on the hand wheel 55. Thus the pawl 57 adjustably connects the hand wheel 55 through the wheel 51 to the worm shaft 39 for rotating the latter. In a circular slot 61 on the hand wheel 55, and adjustably secured therein by nuts 64, are two T-bolts 62 and 262 and a T-bolt 63. The projecting ends 62*a* and 262*a* of the T-bolts 62 and 262 are longer than the projecting end 63*a* of T-bolt 63 and the latter is conical as shown for a purpose to be described. On the upper side (Fig. 3) of the extension 40 is a plunger housing 66, in the pocket bore 67 of which is mounted an exteriorly projecting plunger 68, adapted to be retracted into the bore 67 against a compression spring 69 by a knurled handle head 70 connected to

the plunger by a stem 71. The projecting end of the plunger 68 lies in the rotary path of the T-bolt ends 62*a*, 262*a* and 63*a*.

By means of the construction just described, with the plunger 68 in the position shown, the hand wheel may be rotated in either direction and stopped at pre-selected limits of angular movement by engagement of the projecting ends of the T-bolts 62 and 262 with the plunger 68 (see Fig. 6). The end of T-bolt 63 is adapted to stop the movement of the wheel 55 at an intermediate position but its conical shape permits it to repress and ride over the plunger 68 and permits the wheel 65 to be turned beyond this intermediate position upon the exertion of sufficient force on the hand wheel. Movements of the hand wheel 55 will, from the description hereinbefore, be understood to turn the worm 37 and nut 31 and propel the shaft 10 axially and move the grinding wheel 9 axially.

Movement of the hand wheel 55 being thus stopped at limits in each direction, the movement of the grinding wheel planular face 47 thereby will correspondingly be stopped at definite limits in each direction. By raising the pawl 57 to release the wheel 51, and by turning it by hand the planular face 47 of the grinding wheel may be moved independently of the stops. Thus the planular face 47 of the grinding wheel may be moved through a preselected distance between stopped limits of movement when the wheels 55 and 51 are locked together, and the position of this zone of movement thus determined may be preselected by moving the grinding wheel when the wheels 55 and 51 are unlocked.

As shown in Fig. 1, on the outside of the tubular arm 6 is bolted at 75—75 the base 76 of a wheel truing or dressing mechanism from which rises a post 77 (Fig. 7), carrying a barrel 78 within which is rotatably mounted a dresser shaft 79 in the following manner. A bushing 80 fits the internal bore of the barrel 78 and itself provides a rotative bearing for an enlarged portion 81 of the shaft 79. A flange 82 of the bushing 80 provides an end thrust bearing for an annular face 83 on the shaft 79. The shaft 79 is adapted to be rotated by means of a sleeve 84 surrounding a reduced portion 85 of the shaft 79, keyed thereto as at 86, and having, on its cylindrical periphery, worm wheel teeth 87 meshing with the teeth 88 of a worm 89 rotatably mounted in an extension 90 on the upper side (as viewed in the drawings) of the barrel 78. The worm is adapted to be turned by a handle 91 secured at 92 to the end of a worm shaft 93 projecting outwardly through the barrel extension 90.

The sleeve 84 rotates in a bearing bushing 94 which fits the internal bore of the barrel 78 and has a flange 95 over-hanging the end of the barrel 78 as shown. The sleeve 84 also has a flange 96 which over-hangs the flange 95. The reduced portion 85 of the shaft 79 terminates in a threaded portion 97 carrying a hollow faced nut 98 and between the nut 98 and the flange 96 is a compression spring 99. By means of this construction the spring 99 re-acting in one direction through the flanges 96, 95 into one end of the barrel 78 exerts a force axially in the other direction on the nut 98 and shaft 79 which holds the shoulder 83 firmly without lost motion against the flange 82 and the latter against the opposite end of the barrel 78, thus resiliently taking up all lost motion of the shaft 79. As will also be understood from the foregoing description, the worm 89 may be oscillated in either direction by the handle 91 to oscillate the shaft 79. A laterally extending arm 100 on the shaft 79 terminates in a head 101 bored out at 102 and threaded at 103 to receive the usual or any suitable wheel dresser holder, the particular example illustrated comprising a tubular holder 104 adjustably threaded into the head at 103, and having a hexagon head 105 for adjusting it and adapted to be locked in any adjusted position by a well known locking means indicated at 250. In the tubular holder 104 is threaded a clamp rod 106 which holds, in the end of the holder 104, a diamond or other dressing element 107. The shaft 79 and barrel 78 are so mounted on the tubular arm 6 that the rotational axis of the shaft 79 is parallel to the axis of the grinding wheel shaft 10. It will therefore now be understood that when the shaft 79 is oscillated as above described the diamond or other dressing element 107 will swing back and forth in a plane which is at right angles to the axis of the shaft 10 and may be employed to dress the planular face 47 of the grinding wheel in a plane.

The parts just described are arranged so that the holder 104 will swing through the doorway 45, see Figs. 1 and 7. By stopping the holder in the doorway, the diamond or dressing element may be adjusted axially (by turning the threaded holder 104 in the head 100 by the hexagon head 105) until it just touches the wall 46 of the doorway; and then it may be swung inwardly free from the wall 46 and then swung back and forth to dress the face 47 of the wheel in a plane coincident with or containing the wall or reference station 46.

The reference station or wall 46 of the wheel hood 8, besides being located where it may be used as a reference station to which to refer the plane 47 of the grinding wheel, is also located in or adjacent to the plane of the end thrust bearings 12 of the grinding wheel shaft 10. The plane of the grinding wheel and the thrust bearings having this relation to the reference station, the axial

distance between the bearings and the plane of the grinding wheel is so small as to prevent or minimize to a negligible amount the shifting of the wheel plane out of position by thermal expansion of the shaft upon a rise of temperature thereof.

The complete operation of the invention will now be described. The dresser is adjusted so that the dressing element 107 thereof will swing in a plane coincident with the wall 46 of the doorway 45. The pawl 57 on the hand wheel 55 is raised by hand to disengage the tooth 58 from the toothed wheel 51 and the wheel 51 is rotated by hand rotating the worm 37 and worm wheel or nut 31 and propelling the screw 28, quill 11, shaft 10 and finally grinding wheel 9, until the planular face 47 of the wheel is brought approximately into the path of the diamond or dressing element 107. The pawl 57 is then released and the tooth 58 locks the hand wheel 55 and wheel 51 together and then by turning the wheel 55 the face 47 is brought accurately into the path of the diamond 107. The wheel dresser is then operated by turning the handle 91 a number of revolutions in alternate directions swinging the diamond 107 back and forth over the path 108, Fig. 7, dressing the face 47 of the grinding wheel in the plane coincident with the wall or reference station 46. The T-bolt 62 is adjusted around in the slot 61 without moving the wheel 55, until its end 62*a* engages the side of the plunger 68 as shown in Fig. 6 to act as a stop to thereafter limit the movement of the wheel 55 in one direction and therefore to limit the movement of the face 47 of the wheel toward the dressing element or in other words thereafter stop it accurately in the preselected plane of the wall or reference station 46 above described. The hand wheel 55 is now turned in the opposite direction to move the face 47 of the wheel away from the preselected plane by an amount equal to the total amount it is desired to grind off of the tooth faces of the work gear 49. With the wheel 55 in this second position the other T-bolt 262 is adjusted around in the slot 61 until its end 262*a* engages the other side of the plunger 68 as a stop. The T-bolt 63 is then adjusted to a position approximately half-way between the T-bolts 62 and 262. The work gear 49 is next mounted in the machine in any well known or suitable manner and positioned with a gear tooth face just touching the face 47 of the grinding wheel. With the gear thus positioned, and with the machine in operation the hand wheel 55 is rotated until the intermediate T-bolt 63 is stopped on the plunger 68 thus advancing the grinding wheel to grind off half of the total amount to be finally removed from the gear tooth. The operation of the machine continues, grinding all of the teeth of the gear once around. The hand wheel 55 is then turned the rest of the way to the second stop bringing the wheel face 47 accurately into the preselected and above mentioned plane and the continued operation of the machine removes the rest of the material on the gear tooth faces. Since dressing the wheel wears its face away, the wheel may be fed into the dresser before dressing it whenever necessary by raising the pawl 57 and turning the hand wheel 51 up another notch, thus obviating any necessity for readjusting the stops 62 and 262 due to continued use and redressing of the wheel.

The invention thus provides means to position the planular face 47 of the grinding wheel to accurately locate it in or maintain it in or restore it to a preselected plane on the machine determined by a reference station thereon; and to accurately control and predetermine the position of the plane at known distances therefrom; and the invention also provides means for preventing the plane of the wheel face from moving out of its predetermined positions upon thermal expansion of the wheel shaft by locating the end thrust bearings of the shaft relative to the reference station.

In Fig. 9 is shown the application of the invention to a grinding machine for grinding cylinders or shafts 200, or the like, supported on centers 201—201. The grinding wheel 202 supported in bearings 203—203 on a slide 204 is adapted to be adjustably reciprocated toward and from the work on ways 205 by a hand screw 206, which is anchored to the slide 204 at 207 and threaded into a stationary nut 208 on a main slide 209 reciprocable on ways 210. The dressing element 211 is mounted in a holder 212 screwed into a support 213 reciprocable on ways 214.

In operation the dressing element support 213 is moved to the right and the dressing element 211 is screwed in or out to bring it into contact with the reference station 215. And when thus adjusted, the support 213, is moved to the left and is reciprocated back and forth across the face of the wheel 202 to dress it in the plane or line 216. If necessary the wheel may be fed toward or from the dressing element by the hand wheel 206. If preferred the wheel may be moved back and forth across the dressing element 211 by reciprocating the slide 209. When the wheel has been dressed the slide 209 is moved to the left to bring the wheel into engagement with the work and to grind the same. Obviously the reference station 215 may be adjusted by the bolt and slot arrangement at 217 to bring the reference station 215 into the line or plane 216 of the work; and whatever position it may have, the dressing element may be adjusted to it and the wheel dressed by the element to bring the working surface of the wheel coincident with the line or plane 216 of the reference station.

The invention is not limited to the forms shown and described. As will be apparent the invention admits of embodiment in various modifications within the scope of the claims.

I claim:

1. In an apparatus for giving true shape and position to the planular face of the grinding wheel of a gear grinding machine, a main frame, means for moving the grinding wheel axially on the frame, a stop device for stopping the said axial movement of the wheel at a working position thereof, and means for dressing the planular face of the wheel into coincidence with a predetermined plane on the frame when in said stopped working position, said means including a dressing reference station on the frame, a dressing element mounted for movement into engagement with the reference station to position the element, and mounted for movement in said predetermined plane.

2. In an apparatus for giving true shape and position to the planular face of the grinding wheel of a gear grinding machine, a main frame, means for moving the grinding wheel axially on the frame, a stop device for stopping the said axial movement of the wheel at a working position thereof, and means for dressing the planular face of the wheel into coincidence with a predetermined plane on the frame when in said stopped working position, said means including a dressing reference station on the frame, a dressing element mounted for movement into engagement with the reference station to position the element, and mounted for movement in said predetermined plane, and auxiliary means whereby the wheel may be moved beyond said stopped position to feed it into the path of the dressing element.

3. In a gear grinding apparatus comprising a main frame and an axially movable planular faced grinding wheel, means for moving the wheel axially to feed it relative to the work, means for stopping the feed at a final fed working position, and means for dressing the planular face of the wheel into coincidence with a predetermined plane on the machine, when in said final stopped position, said means including a dressing reference station on the frame, a dressing element mounted for movement into engagement with the reference station to position the element and mounted for movement in said predetermined plane, and auxiliary means whereby the wheel may be fed beyond said final position independently of the stopping means, to feed the wheel into the path of the dressing element.

4. In an apparatus for giving true shape and position to the planular face of the grinding wheel of a gear grinding machine, a main frame, a spindle for the wheel on the frame, means for moving the wheel spindle endwise on the frame, said means including an element associated with the wheel spindle adapted to be moved to move the spindle endwise, a first operable means associated with said spindle moving element for moving the element when operated, a second operable means disconnectibly connected with the first operable means and adjustable relative thereto when disconnected, a stop on the frame and a stop on the second operable means adapted to engage the stop on the frame, whereby the second operable means may be moved to mutually engage the stops to position the planular face of the wheel in a predetermined working plane on the machine and whereby the first and second operable means may be adjusted relatively to each other to shift the said stopped position of the wheel to permit its being dressed off in said plane, a dressing reference station on the frame, a dressing element on the frame mounted for movement into engagement with the reference station to position the element and mounted for movement in said predetermined plane to dress the planular face of the wheel.

5. In an apparatus for giving true shape and position to the planular face of the grinding wheel of a gear grinding machine, a main frame, a spindle for the wheel on the frame, means for moving the wheel spindle endwise on the frame, said means including a pair of meshed screw threaded elements the first of which is connected with the tool spindle and the second of which is adapted when rotated to propel the first and thereby move the spindle endwise, an operable element, connections between the operable element and the second screw threaded element for rotating the latter, a hand operable element disconnectibly connected with the operable element and adjustable in position relative thereto when disconnected therefrom, a stop on the frame, a stop on the hand operable element adapted to engage the stop on the frame, whereby the hand operable element may be moved to mutually engage the stops to position the planular face of the wheel in a predetermined working plane on the machine, and whereby the two operable elements may be adjusted relative to each other to shift the said stopped position of the wheel face to permit its being dressed off in said plane, a dressing reference station on the frame, a dressing element on the frame mounted for movement into engagement with the reference station to position the element and mounted for movement in said predetermined plane to dress the planular face of the wheel.

6. In an apparatus for giving true shape and position to the working surface of the grinding wheel of a grinding machine, a main frame, means for moving the grinding wheel on the frame, a stop device for stopping the

movement of the wheel at a working position on the frame, and means for dressing the working surface of the wheel into coincidence with a predetermined working zone on the machine when in said stopped working position, said means including a dressing reference station on the frame, a dressing element mounted for movement into engagement with the reference station to position the element, and mounted for movement in a predetermined path on the frame to dress the working surface of the wheel.

7. In an apparatus for giving true shape and position to the working surface of the grinding wheel of a grinding machine, a main frame, means for moving the grinding wheel on the frame, a stop device for stopping the movement of the wheel at a working position on the frame, and means for dressing the working surface of the wheel into coincidence with a predetermined working zone on the machine when in said stopped working position, said means including a dressing reference station on the frame, a dressing element mounted for movement into engagement with the reference station to position the element, and mounted for movement in a predetermined path on the frame to dress the working surface of the wheel, and auxiliary means whereby the wheel may be moved beyond said stopped position into the path of the dressing element.

8. In a grinding apparatus comprising a main frame, a grinding wheel and a wheel spindle, means for moving the wheel spindle to feed the wheel relative to the work, means for stopping the feed at a final working position, and means for dressing the working surface of the wheel when in said final stopped position to bring it into coincidence with a predetermined working zone on the machine, said means including a dressing reference station on the frame, and a dressing element mounted for movement into engagement with the reference station to position the element, and mounted for movement to dress said working surface.

9. In an apparatus for giving true shape and position to the planular face of the grinding wheel of a gear grinding machine, a main frame, means for moving the grinding wheel on the frame in a direction transversely of its grinding face, a stop device for normally stopping the movement of the wheel with its planular face at a working position thereof, means for moving the wheel transversely of its face, a preselected amount independently of the stop device whereby it may be positioned in a second stopped position determined by said stop device and means for dressing the planular face of the wheel into coincidence with a predetermined plane on the frame when in said second stopped position.

10. In a gear grinding apparatus comprising a main frame and a generally axially movable planular faced grinding wheel, means for moving the wheel generally axially to feed it relative to the work, means for stopping the feed at a final working position, means for causing the wheel to be stopped after an increment of movement beyond the working position and means for dressing the planular face of the wheel into coincidence with a predetermined plane on the machine when in said stopped position.

11. In an apparatus for giving true shape and position to the working surface of the grinding wheel of a grinding machine, a main frame, means for moving the grinding wheel on the frame, a stop device for normally stopping the movement of the wheel at a working position on the frame, means whereby the wheel may be moved a preselected increment beyond the working position to a second stopped position determined by said stop device, and means for dressing the working surface of the wheel into coincidence with a predetermined working zone on the machine when in said second stopped position.

12. In an apparatus for giving true shape and position to the planular face of the grinding wheel of a gear grinding machine, a main frame, means for moving the wheel generally axially on the frame, an element associated with the wheel adapted to be moved to move the wheel, a first operable means associated with the wheel moving element for moving the element when operated, a second operable means disconnectibly connected with the first operable means and adjustable relative thereto when disconnected therefrom, a stop on the frame and a stop on the second operable means adapted to engage the stop on the frame, whereby the second operable means may be moved to mutually engage the stops to position the planular face of the wheel in a predetermined working plane on the machine and whereby the first and second operable means may be adjusted relatively to each other to shift the said position at which the wheel is stopped to permit its being dressed off in said plane, a dressing reference station on the frame, a dressing element on the frame mounted for movement into engagement with the reference station to position the element and mounted for movement in said predetermined plane to dress the planular face of the wheel.

13. In an apparatus for giving true shape and position to the planular face of the grinding wheel of a gear grinding machine, a main frame, a spindle for the wheel on the frame, means for moving the wheel spindle endwise on the frame, said means including an element associated with the wheel spindle adapted to be moved to move the spindle endwise, a first operable means associated with said spindle moving element for moving the element when operated, a second operable

means disconnectibly connected with the first operable means and adjustable relative thereto when disconnected, a stop on the frame and a stop on the second operable means adapted to engage the stop on the frame, whereby the second operable means may be moved to mutually engage the stops to position the planular face of the wheel in a predetermined working plane on the machine and whereby the first and second operable means may be adjusted relatively to each other to shift the said stopped position of the wheel to permit its being dressed off in said plane, a dressing reference station on the frame, a dressing element on the frame mounted for movement into engagement with the reference station to position the element and mounted for oscillatory movement around an axis parallel to the axis of the wheel spindle and in said predetermined plane to dress the planular face of the wheel.

In testimony whereof, I have hereunto signed my name.

CHARLES H. SCHURR.