ABSTRACT

ROLL FOR A ROLLER GRINDER, AND ROLLER GRINDER COMPRISING SUCH ROLL

The present invention relates to a roll (8) for a roller grinder. The roll (8) comprising a shaft (10) having a support structure (11); a plurality of grinding shell segments (22) circumferentially arranged around said shaft (10) to form a tubular grinding shell (20) supported by said support structure (11); and a wedging device (32; 132) for each grinding shell segment (22, 122), wherein each wedging device (32; 132) is arranged in a channel extending axially along said shaft (10; 110) and defined by the associated grinding shell segment (22; 122) and the support structure (11; 111), wherein each wedging device(32; 132) is arranged to releasably secure said grinding shell segment (22; 122) to said support structure (11; 111).The present invention also relates to a high pressure grinder comprising the above roll.

Fig. 2

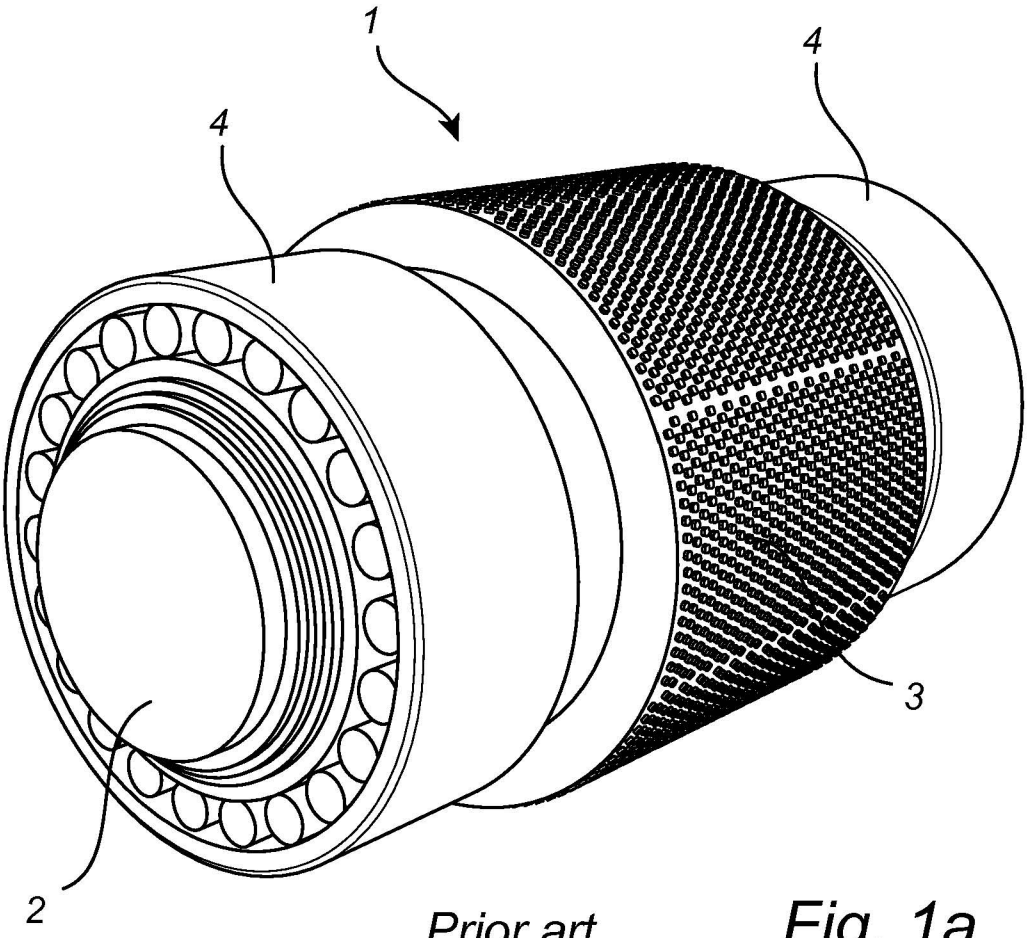

Prior art

Fig. 1a

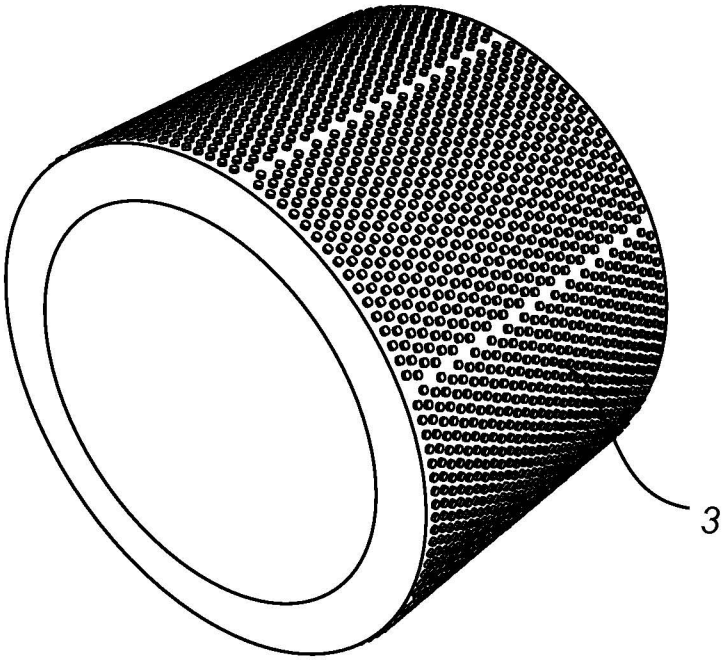

Prior art

Fig. 1b

(Ramesh C. Dhawan)
of Lall Lahiri & Salhotra
Agents for the Applicant

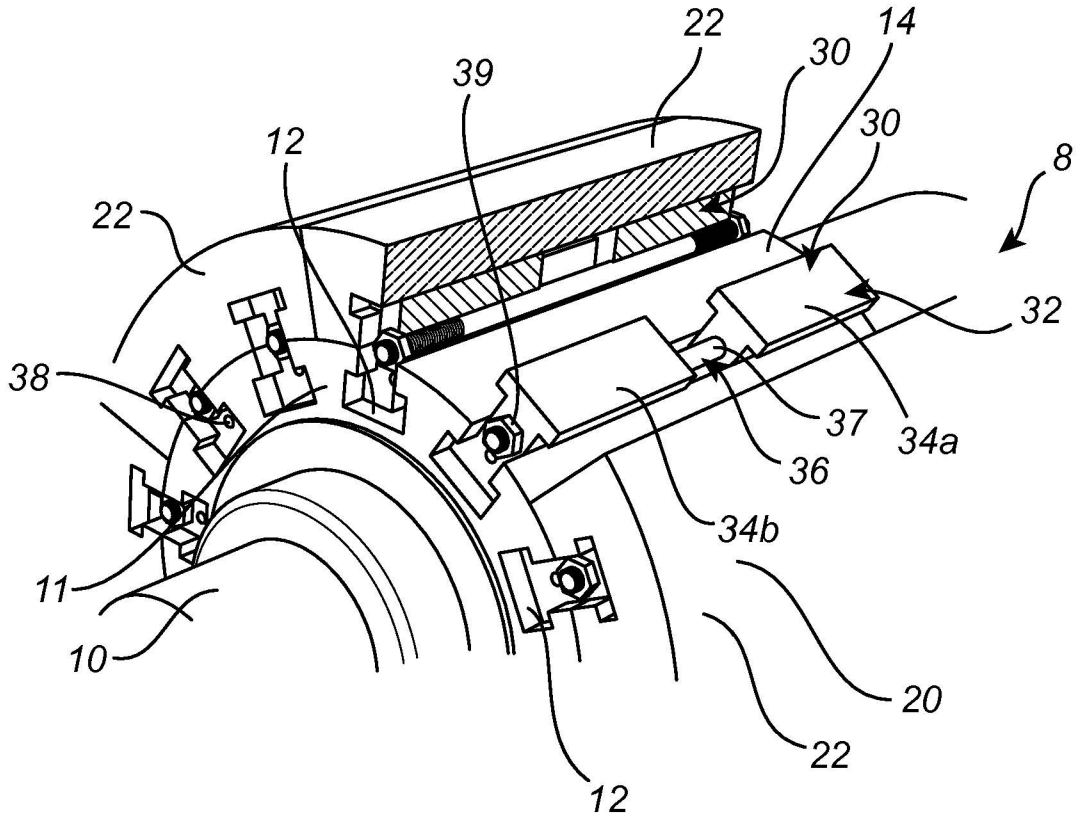

Fig. 2

(Ramesh C. Dhawan)
of Lall Lahiri & Salhotra
Agents for the Applicant

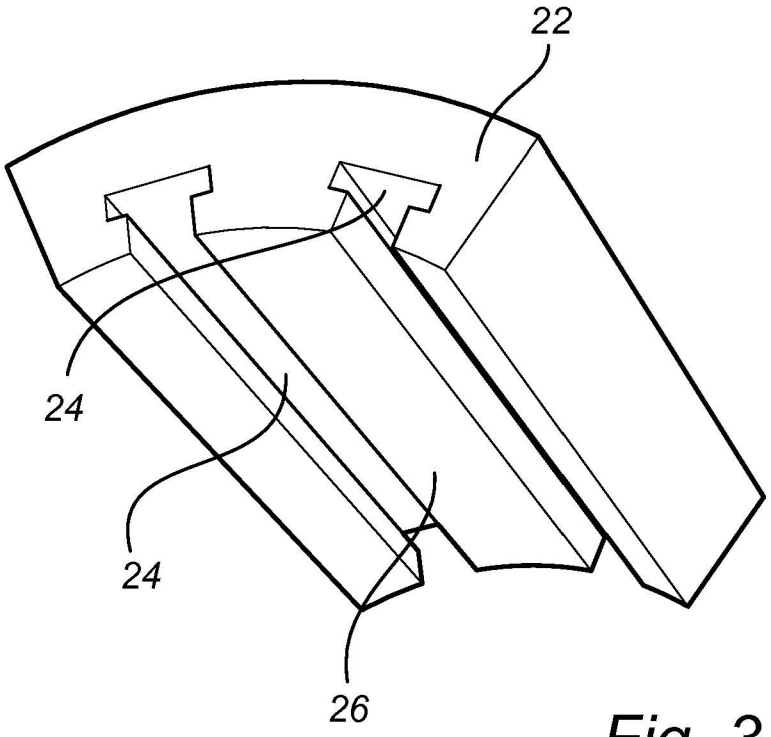

Fig. 3

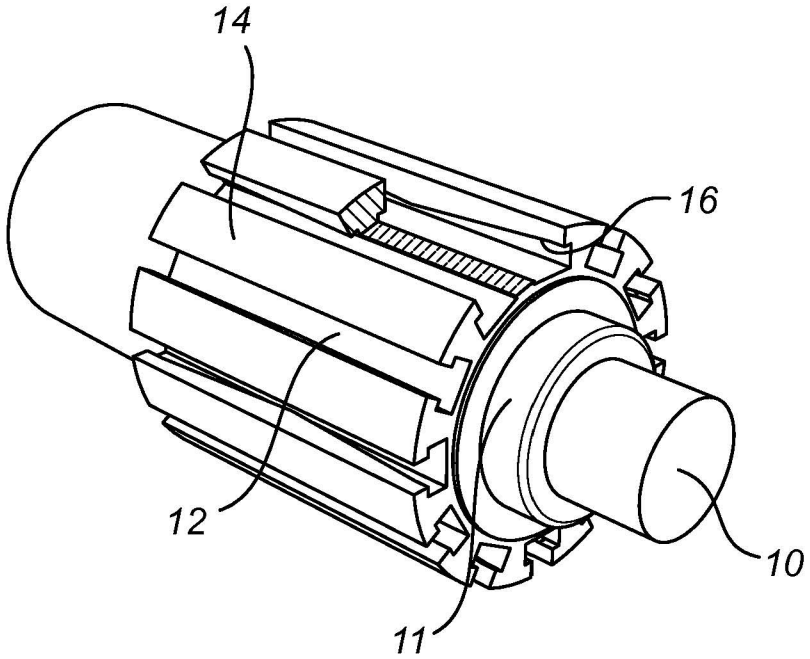

Fig. 4

(Ramesh C. Dhawan)
of Lall Lahiri & Salhotra
Agents for the Applicant

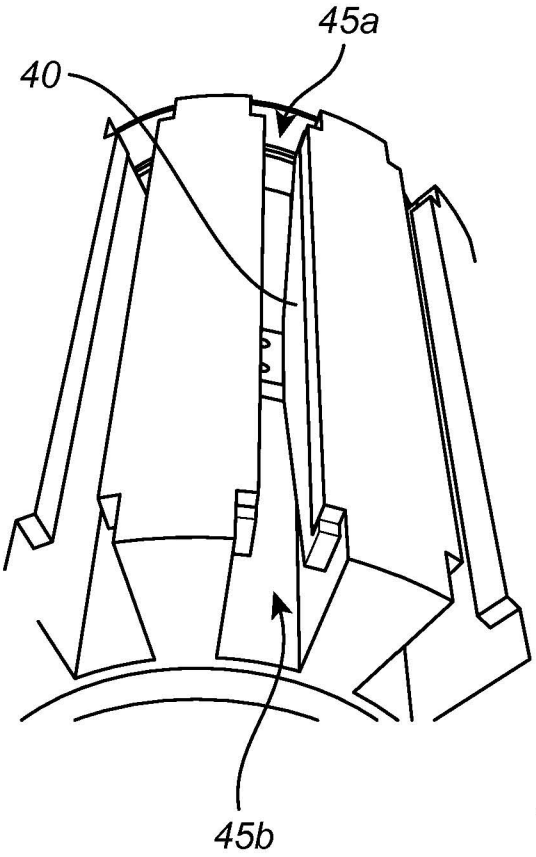

Fig. 5

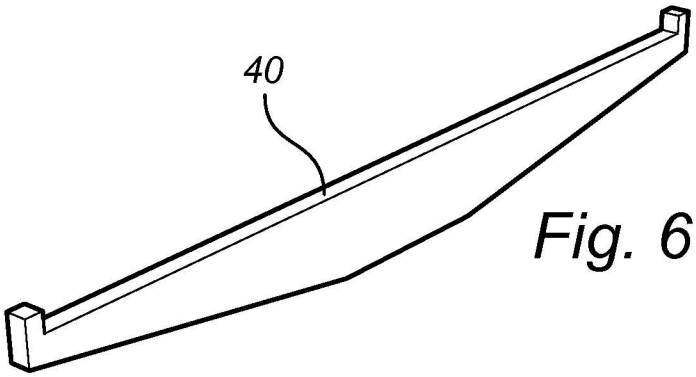

Fig. 6

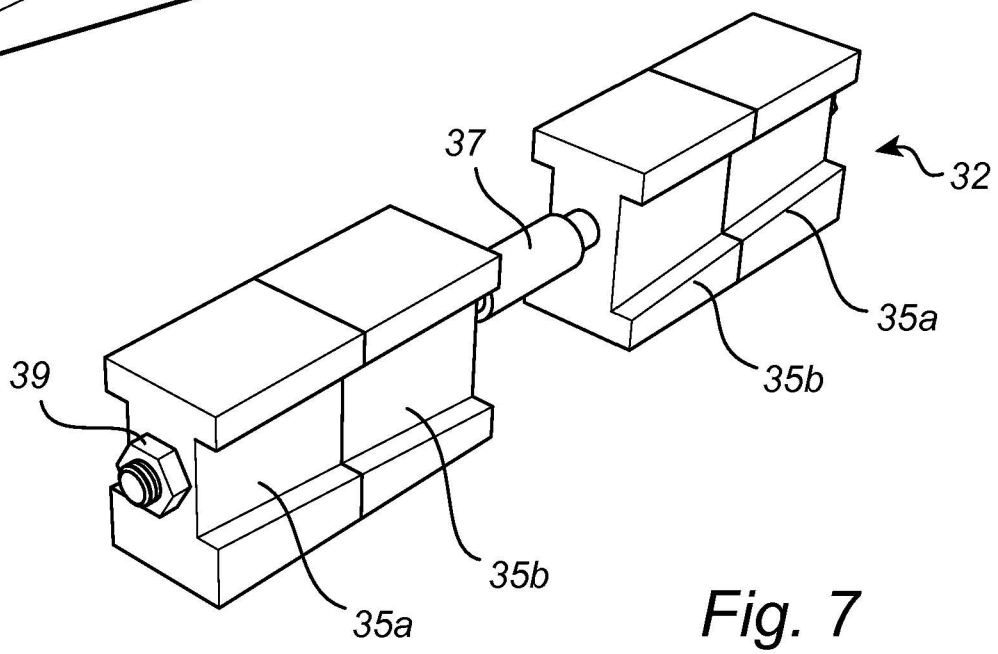

Fig. 7

(Ramesh C. Dhawan)
of Lall Lahiri & Salhotra
Agents for the Applicant

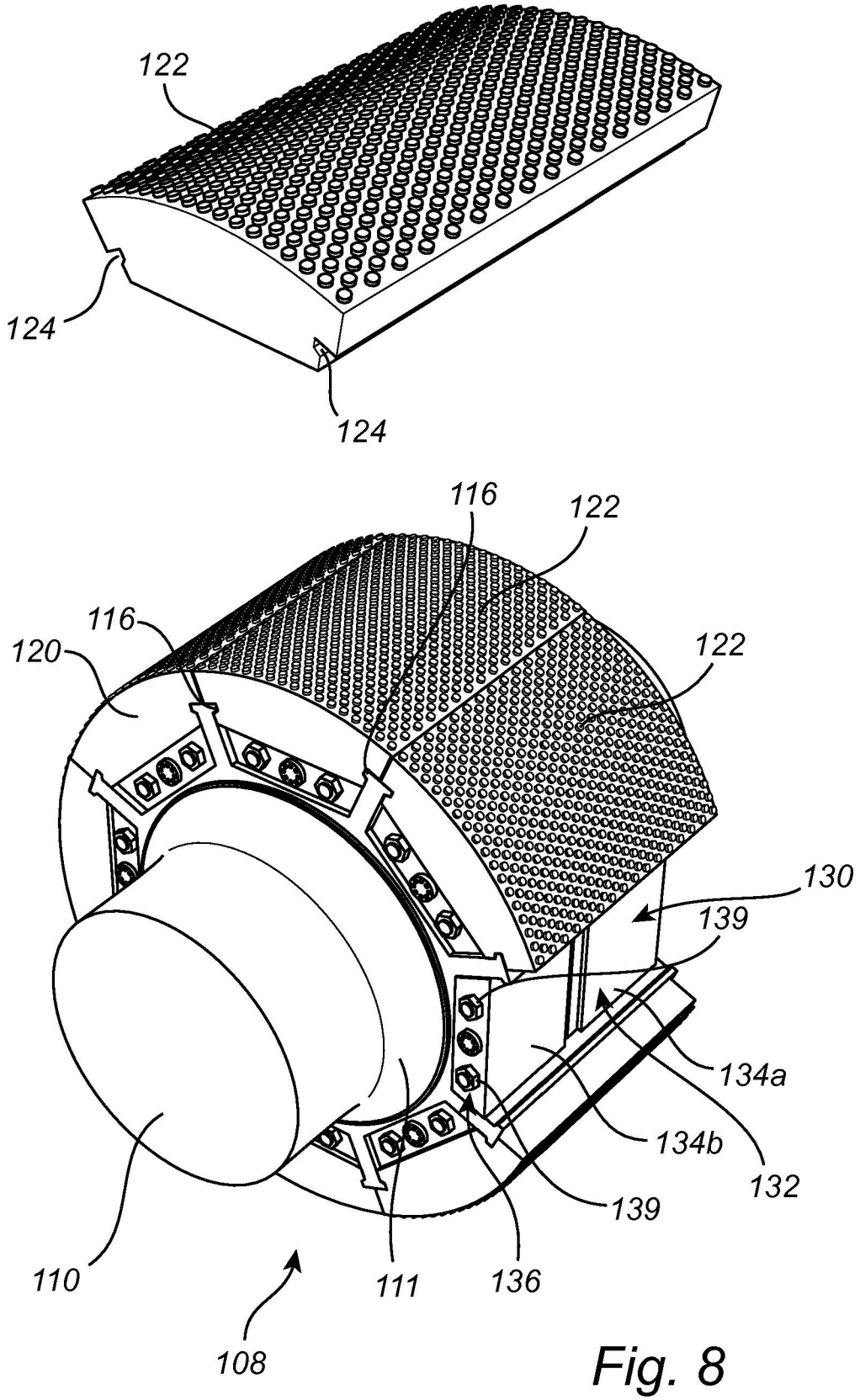

Fig. 8

(Ramesh C. Dhawan)
of Lall Lahiri & Salhotra
Agents for the Applicant

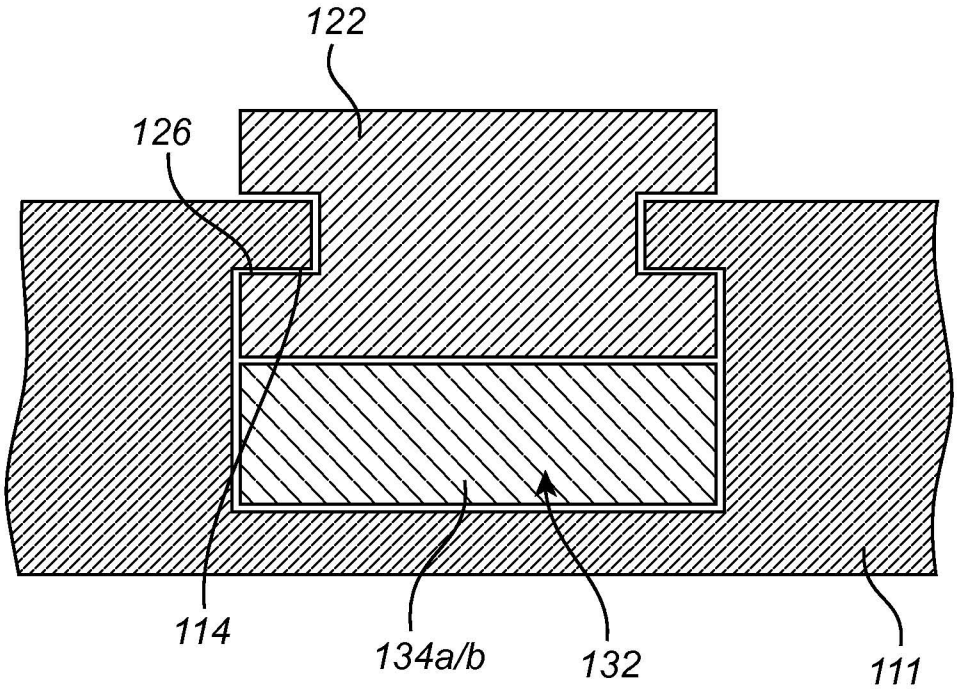

Fig. 9

(Ramesh C. Dhawan)
of Lall Lahiri & Salhotra
Agents for the Applicant