(Model.)

A. BROWN.

THILL COUPLING.

No. 255,927. Patented Apr. 4, 1882.

Fig. 1.

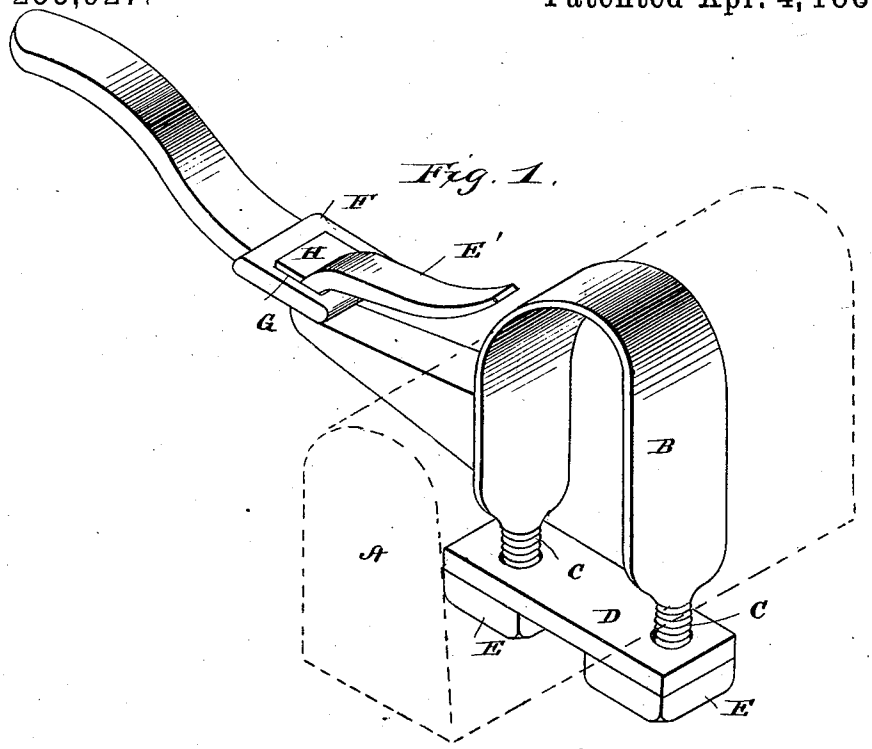

Fig. 2.

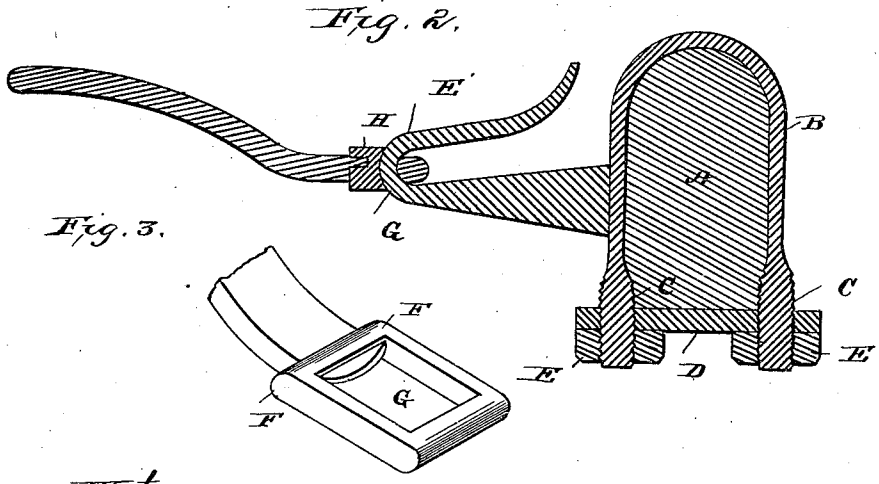

Fig. 3.

Witnesses,
Edwin L. Yewell,
H. Aubrey Poulmin

Inventor,
Albert Brown,
By C. M. Alexander,
his Atty.

N. PETERS, Photo-Lithographer, Washington, D. C.

UNITED STATES PATENT OFFICE.

ALBERT BROWN, OF SCHOHARIE, NEW YORK.

THILL-COUPLING.

SPECIFICATION forming part of Letters Patent No. 255,927, dated April 4, 1882.

Application filed December 21, 1881. (Model.)

To all whom it may concern:

Be it known that I, ALBERT BROWN, of Schoharie, in the county of Schoharie, and in the State of New York, have invented certain new and useful Improvements in Thill-Couplings; and I do hereby declare that the following is a full, clear, and exact description thereof, reference being had to the accompanying drawings, and to the letters of reference marked thereon, making a part of this specification.

This invention relates to certain improvements in thill-couplings; and it has for its objects to provide an improved means for fastening the shafts to the thills, whereby they will be securely connected, and any possible displacement and disagreeable rattling prevented. These objects I attain by the device illustrated in the accompanying drawings, in which—

Figure 1 represents a perspective view of my invention, and Fig. 2 a vertical sectional view of the same. Fig. 3 is a perspective view of the thill-iron, showing the lug or projection by which the cushion is retained in position.

The letter A indicates the front axle of a vehicle, which may be of the ordinary or any approved construction.

B indicates a U-shaped clip, provided with screw-threaded ends C, as usual, and D indicates a cross-piece, perforated so as to set over the screw-threaded ends of the clip and be confined thereon and secure the clip to the axle by means of the nuts E, in the usual manner. The clip is provided with a hooked extension, E′, at one side, as indicated.

The letter F indicates the rear end of the thill, which consists of a bent strip of metal, having a slot, G, adapted to fit over and be secured to the hooked extension E′. The said slot is of sufficient length to receive a cushion, H, when the thill is in place upon the extension, which cushion bears against the curved front of the hook and holds the thill securely thereto with a yielding pressure, and which will permit the proper movement of the thill, and at the same time prevent all rattling and any tendency to become loose. The forward side or wall of the slot in the thill-iron is provided with a projection or lug, which fits into the adjacent part of the rubber cushion, and prevents the displacement of the latter from its seat.

Having thus described my invention, what I claim, and desire to secure by Letters Patent, is—

In combination with the clip, having a hook on the forward side thereof, a thill-iron formed with a rectangular eye, provided with a projecting lug and an interposed rubber cushion, the said lug serving to retain the cushion in place within the eye, substantially as shown and described.

In testimony whereof I affix my signature, in presence of two witnesses, this 7th day of December, 1881.

ALBERT BROWN.

Witnesses:
THOMAS J. SHANNON,
AUG. F. TODD, Jr.