May 7, 1940. J. SLAZINIK ET AL Des. 120,388

TOILET SHELF

Filed March 4, 1940

FIG. 1

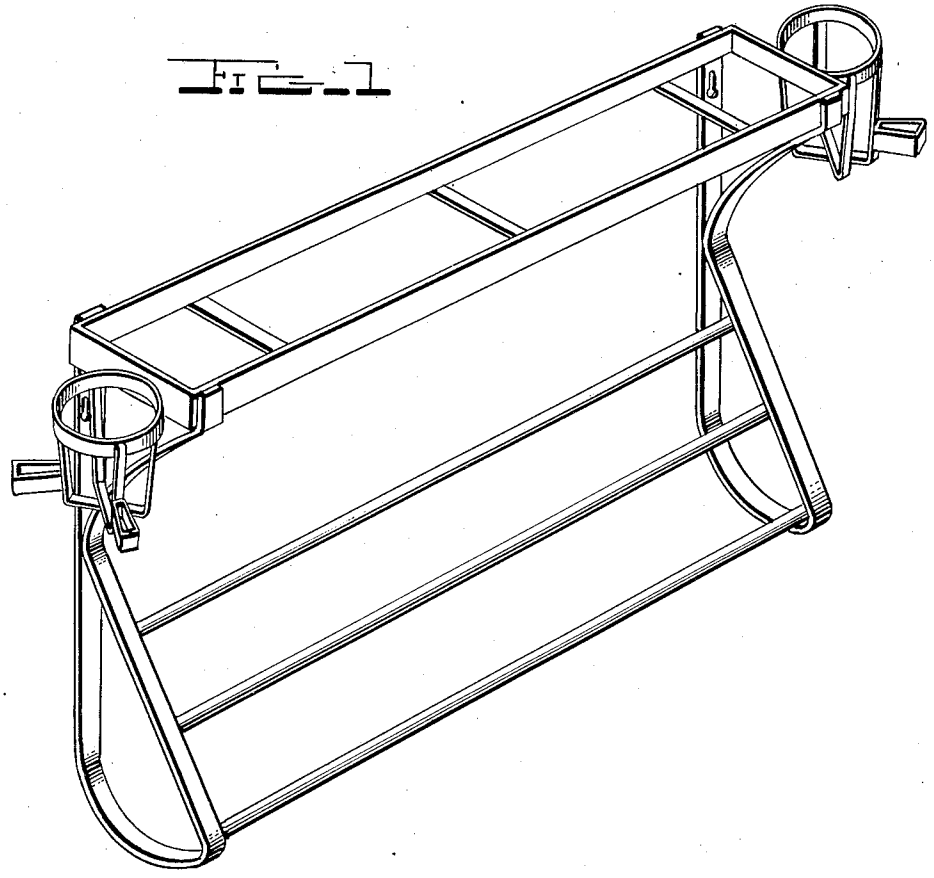

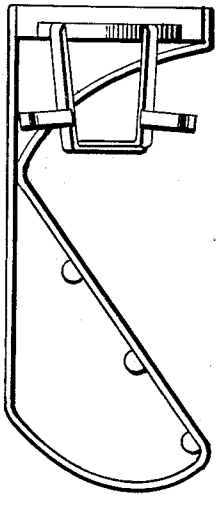

FIG. 2

Inventors
Joseph Slazinik,
Andrew Zavicar,
BY
William C. Linton
Attorney

Patented May 7, 1940

Des. 120,388

UNITED STATES PATENT OFFICE

120,388

DESIGN FOR A TOILET SHELF

Joseph Slazinik and Andrew Zavicar,
New York, N. Y.

Application March 4, 1940, Serial No. 90,670

Term of patent 14 years

To all whom it may concern:

Be it known that we, Joseph Slazinik and Andrew Zavicar, citizens of the United States, residing at New York, county of New York, and State of New York, have invented a new, original, and ornamental Design for a Toilet Shelf, of which the following is a specification, reference being had to the accompanying drawing, forming a part thereof.

Fig. 1 is a perspective view of the toilet shelf, showing our new design, and

Fig. 2 is a side elevational view of Fig. 1.

We claim:

The ornamental design for a toilet shelf, as shown.

JOSEPH SLAZINIK.
ANDREW ZAVICAR.