(19) Europäisches Patentamt
European Patent Office
Office européen des brevets

(11) EP 0 683 105 B1

(12) **EUROPEAN PATENT SPECIFICATION**

(45) Date of publication and mention of the grant of the patent:
25.11.1998 Bulletin 1998/48

(51) Int. Cl.[6]: **B65D 33/01**

(21) Application number: **95303246.3**

(22) Date of filing: **15.05.1995**

(54) Venting valve for a re-closable bag

Entlüftungsventil für wiederverschliessbaren Beutel

Valve de désaérage pour sac refermable

(84) Designated Contracting States:
DE FR GB IT

(30) Priority: **17.05.1994 JP 102923/94**

(43) Date of publication of application:
22.11.1995 Bulletin 1995/47

(73) Proprietor:
Idemitsu Petrochemical Co., Ltd.
Tokyo 108-0014 (JP)

(72) Inventors:
- **Goto, Shuichi,**
  c/o Idemitsu Petrochemical Co.,Ltd.
  Tokyo (JP)
- **Tanaka, Kenichi,**
  c/o Idemitsu Petrochem. Co., Ltd.
  Himeji-shi, Hyogo-ken (JP)
- **Odaka, Hiroshi,**
  c/o Idemitsu Petrochem. Co., Ltd.
  Himeji-shi, Hyogo-ken (JP)

(74) Representative:
Hucker, Charlotte Jane et al
Gill Jennings & Every
Broadgate House,
7 Eldon Street
London EC2M 7LH (GB)

(56) References cited:
DE-U- 6 608 077
FR-A- 2 695 108
US-A- 4 532 652
US-A- 4 708 167
US-A- 4 837 262

Note: Within nine months from the publication of the mention of the grant of the European patent, any person may give notice to the European Patent Office of opposition to the European patent granted. Notice of opposition shall be filed in a written reasoned statement. It shall not be deemed to have been filed until the opposition fee has been paid. (Art. 99(1) European Patent Convention).

EP 0 683 105 B1

Description

This invention relates to a snap-fastener bag, and more particularly, is available for various uses such as a quilt sack and a clothes bag.

Several packing bags (zippered bags) which have, on an opening side thereof, a web-like snap fastener (a fixation) consisting of a male snap fastener half-member and a corresponding female snap fastener half-member capable of intermeshing each other so that the opening side of the packing bag can be shut and opened repeatedly, have been used in the field of the food industry for a long while.

And recently, the packing bag has been also used as a quilt sack and clothes bag. The snap-fastener bag used for the quilt sack and clothes bag is characterised by having a snap fastener of a sealing type and by diminishing its capacity by means of deaeration. The well-known deaerating method has steps of opening a part of the snap fastener, pressuring with weight or inhaling air with a vacuum cleaner in order to remove air from the bag and closing quickly the snap fastener. However, it is not possible to achieve satisfactory deaeration of such bags, because although the snap fastener is closed as soon as the deaerating process is completed in the extremely short time between when the deaerating process completes to when the snap fastener is closed, air removed from the bag is inevitably introduced into the bag again.

Incidentally, using various non-return valves on the market can be scarcely regarded as reasonable in view of high cost and considerable time necessary to incorporate such a non-return valve into a bag.

US-A-4532652 discloses a bag comprising a flexible film, closure means, and a one-way air valve for deaerating the bag when closed. The valve is closed by the film of the bag itself acting as a flapper. In its rest position, the film is seated against a stiff plastic member which is adhered to the inner surface of the film except at regions surrounding venting holes therein, at which regions it may move away from the plastic member, thereby deaerating the bag.

A snap-fastener bag according to the present invention is defined in claim 1.

An original shape of a snap fastener in the snap-fastener bag need not only be limited to one shape formed with a pair of half members intermeshing each other, but may be of any known shape capable of intermeshing to each other. The snap fastener capable of connecting to each face of a female half-member and a male half-member is recommended as the snap fastener employed in the present invention to obtain fine airtightness.

Incidentally, the snap fastener may be parallel provided under the opening with more than two lines.

The number of deaerating passage is not limited into one deaerating passage but also may be over two deaerating passages provided in response to a shape or largeness of the bag.

The deaerating passage can be provided in the bag body itself or on the outside of the bag body to connect.

In the present invention, the deaerating passage maintains stickiness by forming a paint film made of a sticky substance.

The paint film made of the sticky substance is formed by coat, print, lamination or the like.

In the present invention, the sticky substance has the recommendatory kinematic-viscosity of 4 - $5{,}000\times10^{-6}m^2/s$ (100°C).

If the kinematic-viscosity is out of the above range, it must be difficult to obtain a smooth open-close of the deaerating passage like aim of the present invention. Quantity of the coated sticky substance may be defined in response to the viscosity of the sticky substance coated on the paint film in the bag.

In the present invention, the sticky substance consists of more than one selected from polybutene, silicon oil, glycerin, edible oil, mineral oil.

In the present invention, the deaerating passage is configurated by at least one adhesive part formed between up-and-bottom films organizing the bag body.

In the case, the deaerating passage is configurated in the bag body.

The deaerating passage may be structured by adhering a middle-film on one of the up-and-bottom films organizing the bag body.

When the open-close of the deaerating passage is not smoothly carried out for the hard up-bottom film, the employment of a soft film as the middle-film causes the open-close of the deaerating passage to be smooth.

In the present invention, the inside of the films organizing the whole bag body is made of a material having stickiness.

Mentioning the above material, for example, polyolefin such as polypropylene (PP), polyethylene (PE) and ethylene-vinyl-acetate copolymer (EVA), poly vinyl chloride (PVC), polyethylene terephthalate (PET) or nylon (Ny) or copolymer or denaturization thereof can be nominated.

However, the material is not limited in the above example, or it may be possible for the material to maintain the contacting state between the inside of the up-and-bottom films in the bag body so as to stop almost the flow of air in the deaerating passage under condition that force from outside is not added to the bag.

As stated thus, if the films itself has stickiness, there is no necessity to coat the sticky substance, and the enough contacting state of films each other can be obtained.

According to the present invention, pressuring to the bag with a contents in the closing state of the deaerating passage, the deaerating passage is opened to remove air by high internal pressure. When the deaeration carried out by adding pressure to the bag completes, since the inside of the bag is already resulted in a state of decompression by expansionary force of the

contents, the films at the deaerating passage are naturally resulted in the contacting state between the inside of the films. Therefore, the deaerating state in the bag can be maintained in the same state as just after completing the deaeration and closing the deaerating passage. In other words, the deaerating passage according to the present invention works as a nonreturn valve capable of flowing air in one direction, from the inside of the bag to the outside.

In the accompanying drawings:-

Fig. 1 is a plane view of a snap-fastener bag according to the first embodiment of the present invention;
Fig. 2 is a fragmentary sectional view of the snap-fastener bag according to the first embodiment;
Fig. 3 is a fragmentary sectional view of the snap-fastener bag in a working state according to the first embodiment;
Fig. 4 is a sectional view of a snap fastener of the snap-fastener bag according to the first embodiment;
Fig. 5 is a sectional view of a snap fastener of the snap-fastener bag according to the first embodiment;
Fig. 6 is a plane view of the snap-fastener bag according to the second embodiment of the present invention;
Fig. 7 is a plane view of the snap-fastener bag according to the third embodiment of the present invention;
Fig. 8 is a plane view of the snap-fastener bag according to the second embodiment of the present invention;
Fig. 9 is a sectional view along the A-A line in Fig. 8;
Fig. 10 is a sectional view along the B-B line in Fig. 8; and
Fig. 11 is a sectional view along the C-C line in Fig. 8.

A snap-fastener bag according to the first embodiment of the present invention will be explained with reference to Figs. 1 - 5.

The snap-fastener bag 11 is composed of a bag body 12, a deaerating passage 13 provided up a bottom-seal and a snap fastener 21 provided parallel under an opening 14.

The bag body 12 has side-seals 16A, 16B and the bottom-seal 16C which are integrated by adhering between top-and-bottom resin films 15. The resin film 15 is of a multilayer film laminated with a nylon-film as an outer side layer and a liner chain low-density polyethylene (L-LDPE) film as an inner side layer (an adhesive layer).

The deaerating passage 13 is provided by configurating a deaerating passage opening 13A as a non-adhesive part between the side-seal 16A and the bottom-seal 16C and by configurating an adhesive part 17 from the bottom of the side-seal 16A to near the side-seal 16B with the predetermined intervals from the bottom-seal 16C in parallel to adhere between the up-and-bottom films 15. The predetermined interval between the bottom-seal 16C and the adhesive part 17 may be optionally determined to have enough interval in which air pass through the deaerating passage 13 to the outside of the bag 11.

As shown in Fig. 2, in somewhere of the deaerating passage 13, for example, next to the deaerating passage opening 13A, a paint film 19 coated with a sticky substance 18 is formed. A concrete example of the sticky substance is polybutene [the kinematic-viscosity of $8\times10^{-4}m^2/s$ (100°C)], and the sticky substance utilizes for silicon oil, glycerin, edible oil, mineral oil or the like. The coat of the sticky substance 18 can be performed to the snap-fastener bag 11 having the adhesive part 17.

As shown in Figs. 4 and 5, the snap fastener 21 is composed of a pair of a male half-member 22 and a female half-member 23, in which the male half-member 22 is adhered inside on the up film 15 composing the bag body 12 and the female half-member 23 is adhered inside on the bottom film 15.

The male half-member 22 is integrated with a web-like base section (a tape section) 24 as a welding portion to be welded to the bag body, a sectionally hart-shaped head section 25 and a joint section 26 to connect both sections 24 and 25 with each other. The female half-member 23 is integrated with a web-like base section (a tape section) 27 to be welded to the bag body, a semi-circular first hook 28 fixed in relation to the base section 27 and a second hook symmetrical to the first hook 18. There is provided an interval 31 having about enough width for a thickness of the joint section 26 between edges 28A and 29A of both hooks 28 and 29. Since a connecting-face state of the male half-member 22 and the female half-member 23 can be obtained when the snap fastener 21 is closed, the snap fastener 21 can obtain fine airtightness .

Material of the snap fastener 21 is, for example, L-LDPE.

Way of using the snap-fastener bag 11 will be explained.

The snap fastener 21 is opened in order to put a contents 32 such as a quilt into the bag 11 and closed. As shown in Fig. 2, the deaerating passage 13 is still closed in the above-mentioned state.

Next, as shown in Fig. 3, pressuring to the bag 11 with hands and so on, internal pressure of the bag 11 becomes higher, so that a deaerating hole 33 is made at the paint film 19 in the deaerating passage 13. Therefore, the deaerating passage 13 is opened to pass air therethrough to the outside of the bag 11.

Ceasing pressure to the bag 11 after air is completely deaerated from the bag 11, the paint film 19 is generated again because the deaerating hole 33 is closed. The bag 11 has higher negative pressure to be

a state of decompression by expansionary force of the contents 32.

Accordingly, a tight contacting state between the two up-and-bottom films 15 at the deaerating passage 13 via the paint film 19 can be obtained, so that air flowing from the outside of the bag through the deaerating passage 13 to the inside is obstructed in a normal state. The forcibly deaerated state of the bag 11 as stated above is remained.

In the snap-fastener bag 11 according to the present invention, since the paint film 19 coated with the sticky substance 18 such as polybutene is formed in the deaerating passage 13 provided in the bag body 12, air in the bag can be easily emitted from the deaerating passage 13 to the outside of the bag during the deaerating process. Furthermore, just after deaerating, since the deaerating passage 13 is quickly and certainly closed, the deaerating state in the bag is remained for a long time as it stands by cooperative action of the internal negative pressure caused by expansion of the contents 32 and the contacting state of the deaerating passage 13 via the paint film 19. Consequently, comparing with conventional method in which the sealing state is produced by closing the bag just after deaerating or inhaling air under condition that the snap fastener is partly opened, in the present invention, there is no concern that the deaerating state is resulted in imperfection by air introducing into the bag again until the bag is closed.

The deaerating passage 13 is simply structured and easily produced by forming the adhesive part 17 next to the bottom-seal 16C of the bag body 12 and forming the paint film coated with the sticky substance 18.

And the open-close of the snap fastener as conventional method is not required because the deaerating process in the bag 11 can be carried out in the closed state of the snap fastener 21, so that the deaerating process becomes easy.

A snap-fastener bag 35 of the second embodiment according to the present invention will be explained with reference to Fig. 6. Only one deaerating passage 13 is provided in the snap-fastener bag 11 according to the first embodiment, but the snap-fastener bag 35 includes two deaerating passages 36A, 36B which are parallel provided up the bottom-seal 16C under both of the side-seals 16A, 16B like the deaerating passage 13 according to the first embodiment.

In addition to effect of the first embodiment, the above-mentioned snap-fastener 35 can be shortened the deaerating time by reason of the deaerating passages 36A, 36B twice as many as the first embodiment when the width of the deaerating passages 36A, 36B has limits.

Next, a snap-fastener bag 37 of the third embodiment according to the present invention will be explained with reference to Fig. 7. The deaerating passage 13 is parallel provided up the bottom-seal 16C in the snap-fastener bag 11 according to the first embodiment, but in the snap-fastener bag 37 the deaerating passage is parallel provided next to the side-seal 16A.

The above-mentioned snap-fastener bag 37 is convenient when the shape of contents 32 dose not permit to provide a deaerating passage 38 up the bottom-seal 16C in parallel.

Lastly, a snap-fastener bag 41 of the fourth embodiment according to the present invention will be explained with reference to Figs. 8 -11.

The snap-fastener bag 41 includes plural deaerating passages 42A, 42B, 42C.....up the bottom-seal.

The deaerating passages 42A, 42B, 42C.... are composed of a middle-film 44 adhered at the inside of the one resin film 15 (e.g., the upper side) near a bottom opening 43 and the other resin film (e.g., the bottom side).

The middle-film 44 is of a web-like film provided between both of the side-seals 16A and 16B, and an upper edge 44A at the side of the snap fastener 21 is adhered at the inside of the upper resin film 15 by a first adhesive part 45. As shown in Fig. 9, plural second adhesive parts 46 for partition are arranged in parallel direction with both of the side-seals 16A and 16B in predetermined interval. Those second adhesive parts 46 is provided to cause the upper resin film 15, the middle-film 44 and the bottom resin film 15 to adhere together. The deaerating passages 42A, 42B, 42C.... are configurated by the bottom resin film 15 and the middle-film 44 arranged between the second adhesive parts 46 of side by side.

As shown in Fig. 10, from near the center to the bottom of the second adhesive parts 46 of side by side, third adhesive parts 47 are arranged to adhere partly the middle-seal 44 near to the bottom opening 43 with the bottom resin film 15. The third adhesive parts 47 cause the up-and-bottom resin films 15 to adhere quickly each other after completing the deaeration in case of the wide intervals between the second adhesive parts 46, so that in case of the narrow intervals between the second adhesive parts 46, there is no necessity to configurate the adhesive parts 47.

As shown in Fig. 11, the paint films 19 having the sticky substance 18 such as polybutene are formed in the deaerating passages 42A, 42B, 42C....

In the fourth embodiment according to the present invention, when the open-close of the deaerating passages 42A, 42B, 42C... is not smoothly carried out for the hard resin film 15, the employment of the soft middle-film 44 causes the open-close of the deaerating passages 42A, 42B, 42C... to be able to be smooth.

Since the number of deaerating passages is increased more in the bag 41 than in the bag 35 of the second embodiment, the deaerating time can be shorten more and more.

Air in the bag can be deaerated in state of the bag 41 rolled from the side-seal 16A or 16B.

Incidentally, in the above-stated embodiments, the

coat of the sticky substance is carried out in order to obtain effective stickiness of the films in the deaerating passages because L-LDPE film having less stickiness is employed as the film composing the bag body. However, there is no necessity to coat the sticky substance, if the enough contacting state for films each other can be obtained by employing film itself having enough stickiness, such as soft vinyl chloride resin, EVA, LDPE, PP-grade, in stead of the resin film employed in the embodiments.

Furthermore, the deaerating passage is provided inside of the bag body in the above-stated embodiments, but a tube film for the deaerating passage may be provided the outside of the bag to connect to the bag body, which makes easy to inhale air in the bag with a vacuum cleaner.

Claims

1. A snap-fastener bag (11) comprising a bag body (12) formed from two films which are sealed together at three sides (16A,16B,16C) and sealable together at another side through a snap-fastener (21), wherein a deaerating passage (13) is provided in the bag body by an adhesive portion formed between the two films, characterised in that the bag comprises, in the deaerating passage a paint film (19) comprising a sticky substance (18).

2. A bag according to claim 1, wherein the sticky substance has a kinematic viscosity of $4 \times 10^{-6} m^2/s$ to $5000 \times 10^{-6} m^2/s$, as measured at 100°C.

3. A bag according to claim 1 or claim 2, wherein the sticky substance comprises at least one of polybutene, silicone oil, glycerin, edible oil, and mineral oil.

4. A snap-fastener bag (41) according to any preceding claim, wherein the deaerating passage is provided by a middle film (44) adhered to one of the films constituting the bag body.

5. A bag according to any preceding claim, wherein each of the films from which the bag body is made has an inner surface comprising a sticky material.

Patentansprüche

1. Ein Einrastverschlußbeutel (11) bestehend aus einem Beutelkörper (12), der aus zwei Folien gebildet wird, die an drei Seiten (16A, 16B, 16C) zusammengeschweißt sind, und der an einer anderen Seite durch einen Einrastverschluß (21) verschließbar ist, bei dem im Beutelkörper ein Entlüftungsweg (13) mittels eines zwischen zwei Folien ausgebildeten Haftteils vorgesehen ist, dadurch gekennzeichnet, daß der Beutel im Entlüftungsweg eine Farbdünnschicht (19) aufweist, die aus einer klebrigen Substanz (18) besteht.

2. Ein Beutel gemäß Anspruch 1, in dem die klebrige Substanz eine kinematische Viskosität von $4 \times 10^{-6} m^2/s$ bis $5000 \times 10^{-6} m^2/s$, gemessen bei 100°C, aufweist.

3. Ein Beutel gemäß Anspruch 1 oder Anspruch 2, in dem die klebrige Substanz aus wenigstens einer der Substanzen Polybuten, Silikonöl, Glycerin, eßbares Öl und Mineralöl besteht.

4. Ein Einrastverschlußbeutel (41) gemäß einem beliebigen der vorstehenden Ansprüche, in dem der Entlüftungsweg vorgesehen ist durch eine mittlere Folie (44), die an einer der Folien klebt, aus denen der Beutelkörper besteht.

5. Ein Beutel gemäß einem beliebigen der vorstehenden Ansprüche, in dem jede der Folien, aus denen der Beutelkörper gemacht ist, eine innere Oberfläche aufweist, die ein klebriges Material beinhaltet.

Revendications

1. Sac à fermeture par pression (11) comprenant un corps de sac (12) formé à partir de deux films qui sont scellés ensemble sur trois côtés (16A, 16B, 16C) et qui peuvent être scellés ensemble au niveau d'un autre côté par l'intermédiaire d'une fermeture par pression (21), dans lequel un passage de désaération (13) est réalisé dans le corps de sac par une partie adhésive formée entre les deux films, caractérisé en ce que le sac comprend, dans le passage de désaération, un film déposé (19) comprenant une substance collante (18).

2. Sac selon la revendication 1, dans lequel la substance collante a une viscosité cinématique de $4 \times 10^{-6} m^2/s$ à $5\,000 \times 10^{-6} m^2/s$, mesurée à 100°C.

3. Sac selon l'une des revendications 1 ou 2, dans lequel la substance collante comprend au moins un élément parmi le polybutène, l'huile de silicone, la glycérine, une huile comestible, et une huile minérale.

4. Sac à fermeture par pression (41) selon l'une des revendications précédentes, dans lequel le passage de désaération est réalisé par un film intermédiaire (44) adhérant à l'un des films constituant le corps de sac.

5. Sac selon l'une des revendications précédentes, dans lequel chacun des films à partir duquel le sac est constitué possède une surface intérieure comprenant une matière collante.

FIG. 1

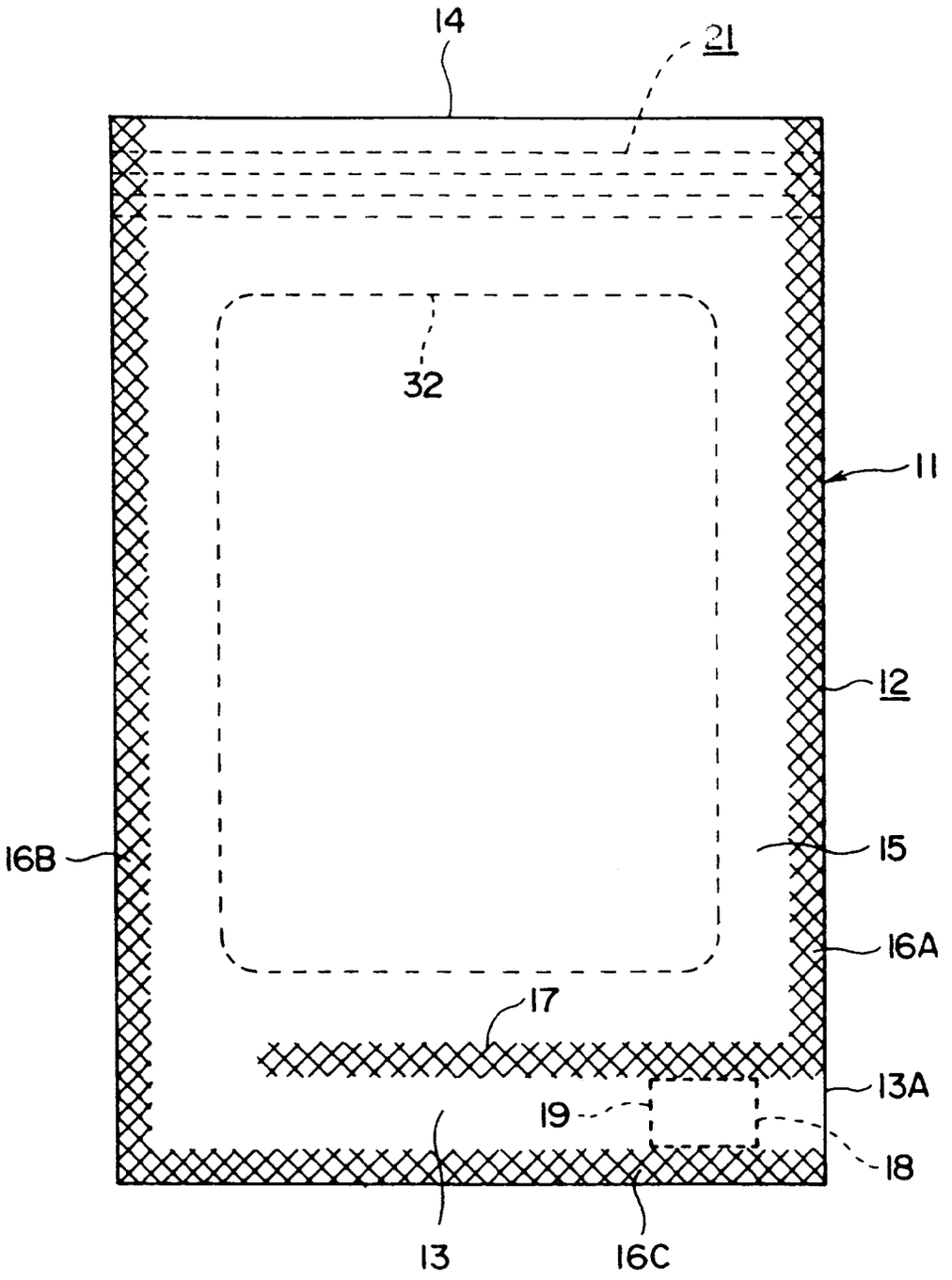

FIG.2

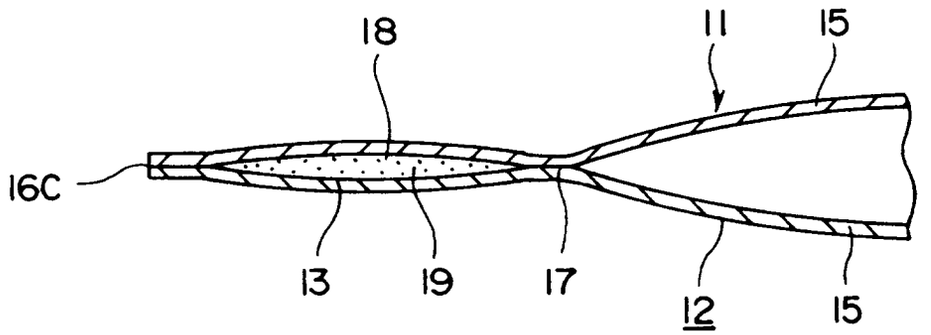

FIG.3

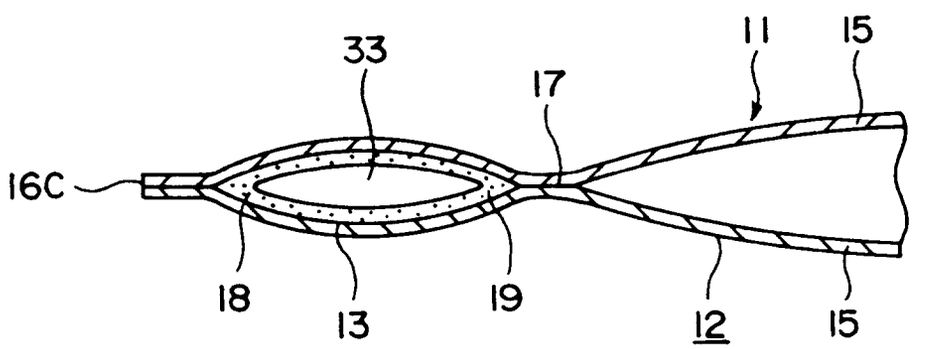

FIG.4

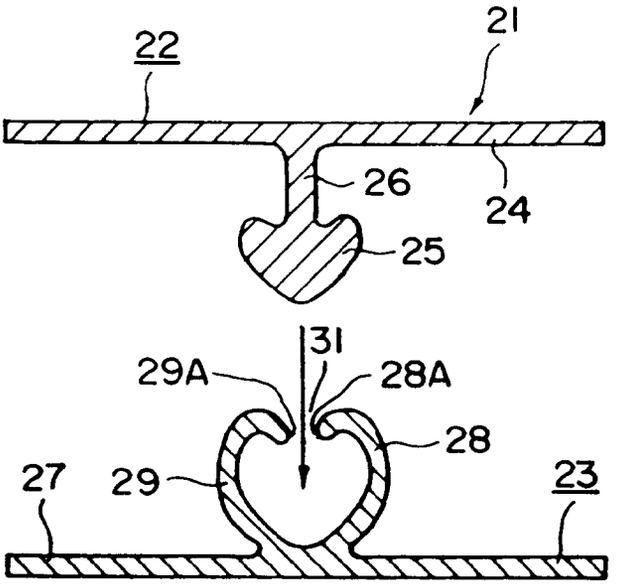

FIG.5

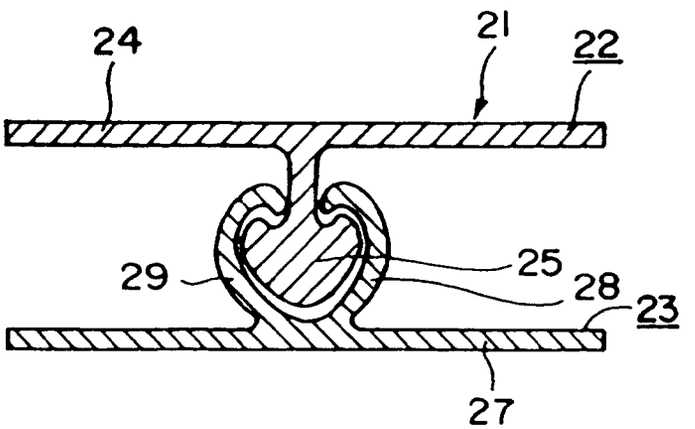

FIG.6

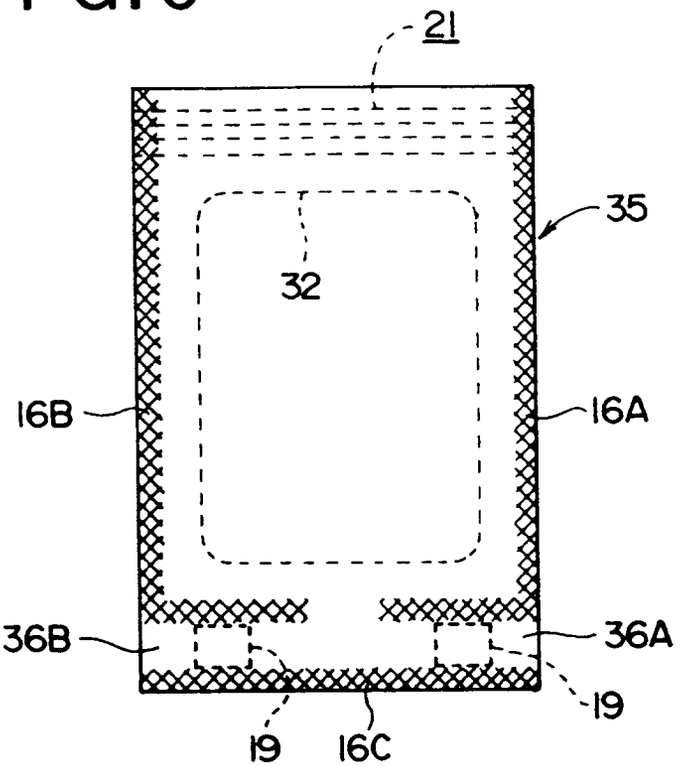

FIG.7

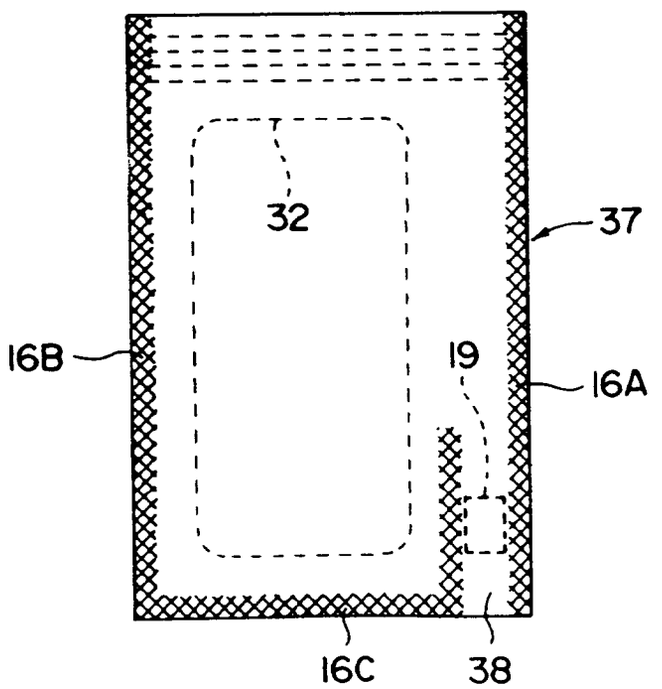

FIG.8

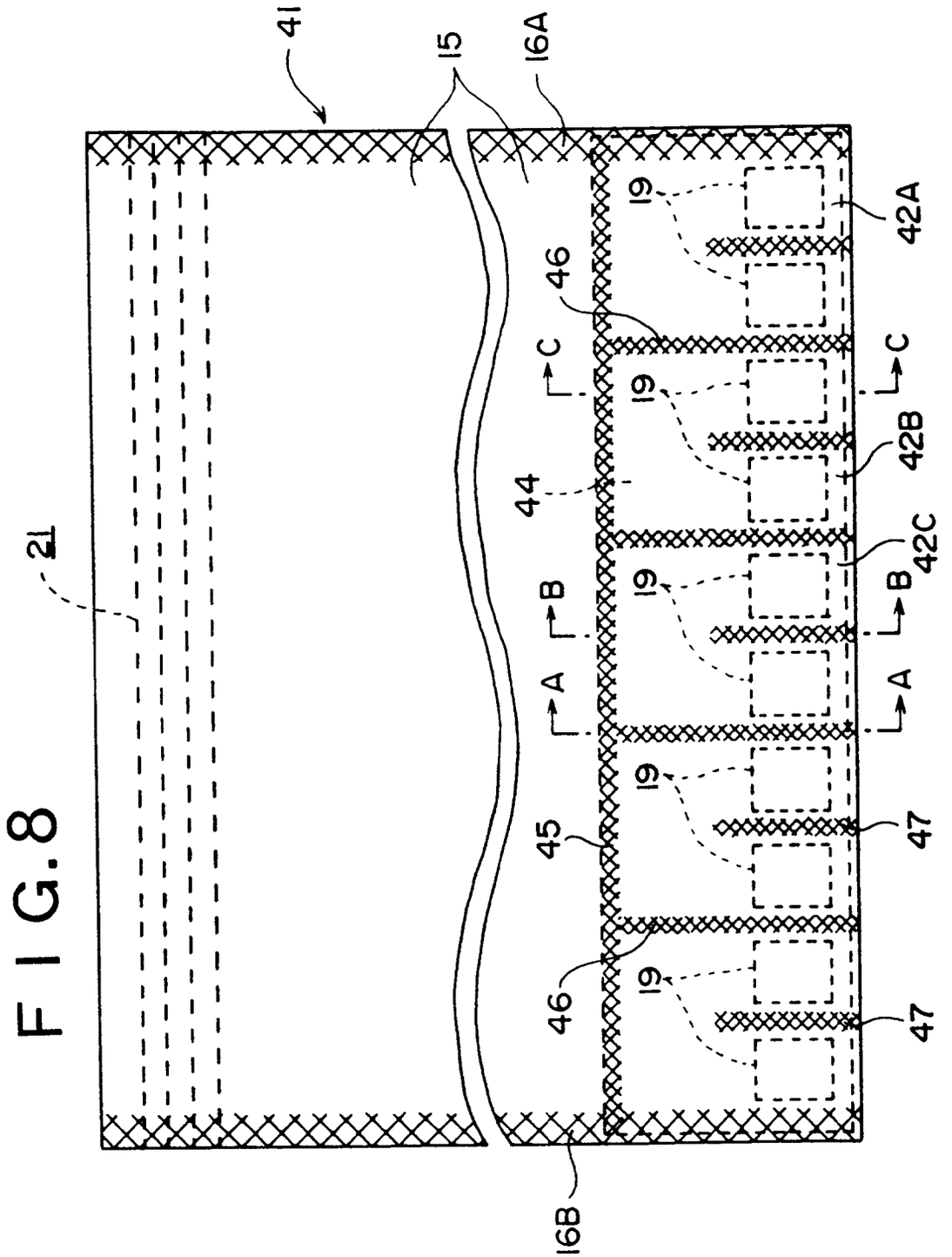

FIG.9

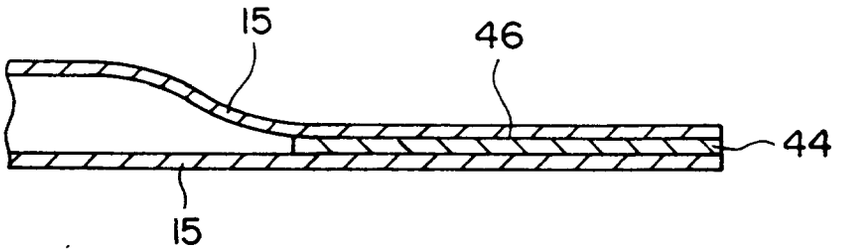

FIG.10

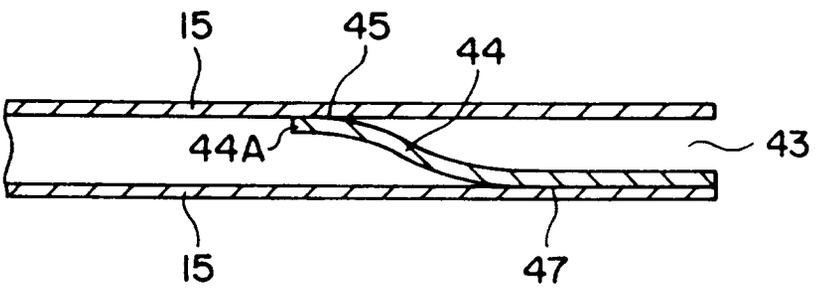

FIG.11

