June 8, 1926. 1,588,318

L. L. DE SMET

COMBINED DOT AND FLAT CLOTH PRINTING MACHINE

Filed Feb. 18, 1925 4 Sheets-Sheet 1

Fig. 1.

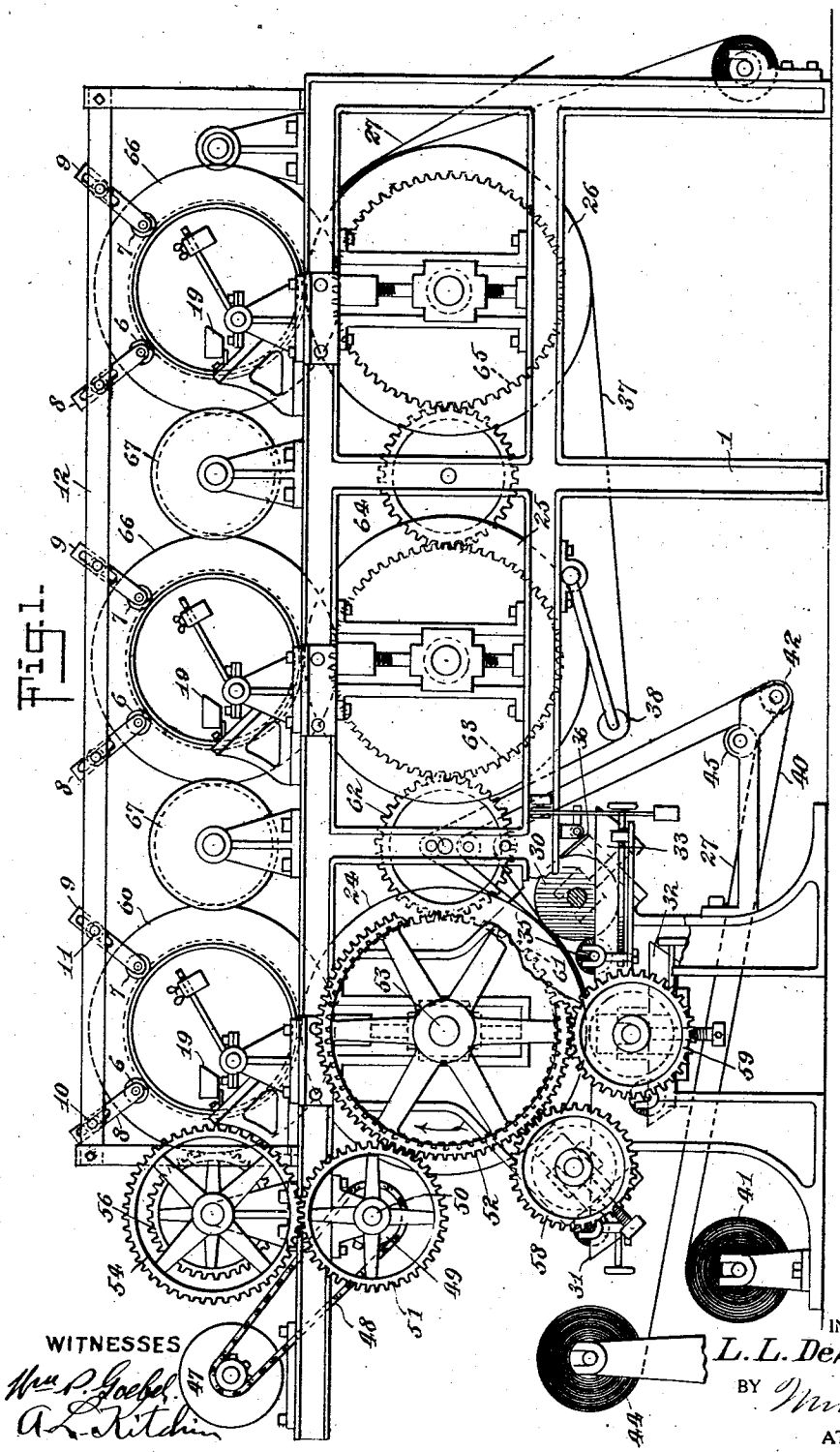

WITNESSES

Wm. P. Goebel.

A. L. Kitchin

INVENTOR

L. L. DeSmet.

BY Munn & Co

ATTORNEYS

June 8, 1926. 1,588,318

L. L. DE SMET

COMBINED DOT AND FLAT CLOTH PRINTING MACHINE

Filed Feb. 18, 1925 4 Sheets-Sheet 2

Fig. 2.

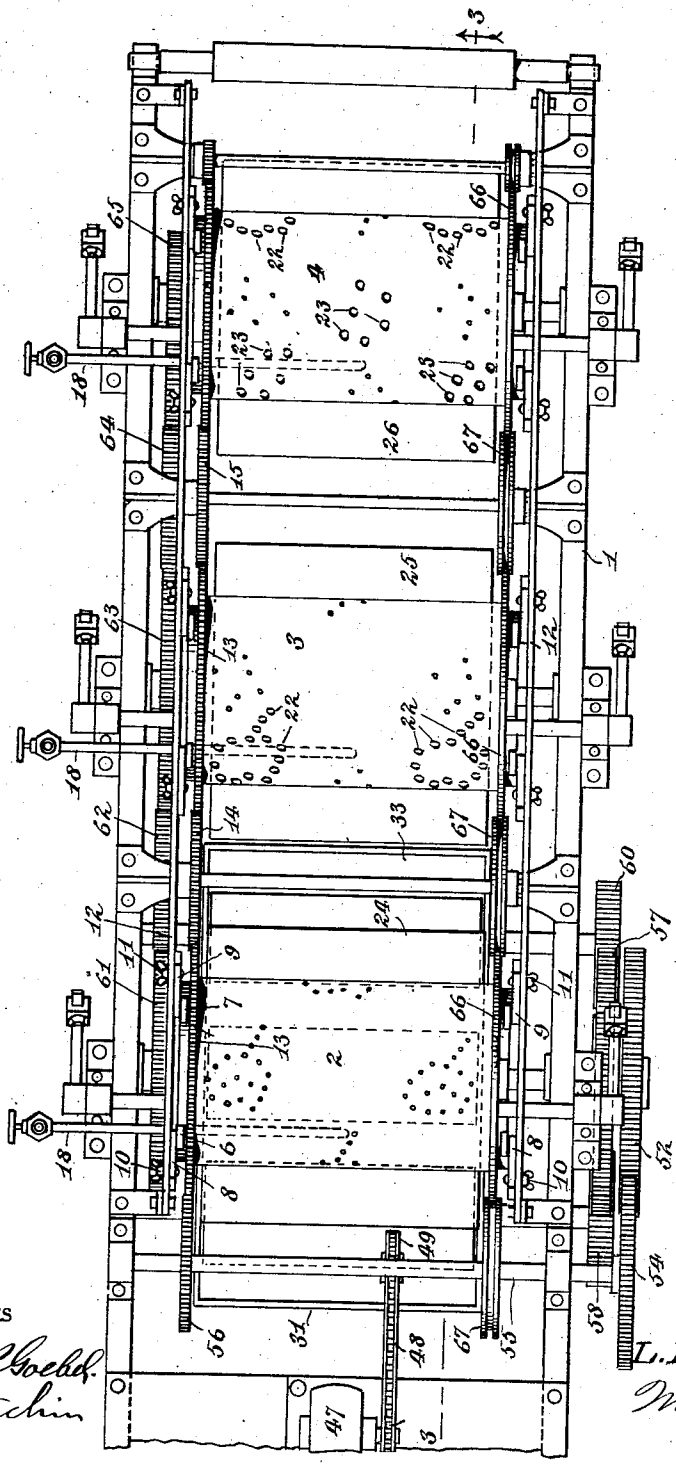

WITNESSES

William J. Goebel.

A. L. Kitchin

INVENTOR

L. L. DeSmet,

Munn & Co

ATTORNEYS

June 8, 1926. 1,588,318

L. L. DE SMET

COMBINED DOT AND FLAT CLOTH PRINTING MACHINE

Filed Feb. 18, 1925 4 Sheets-Sheet 3

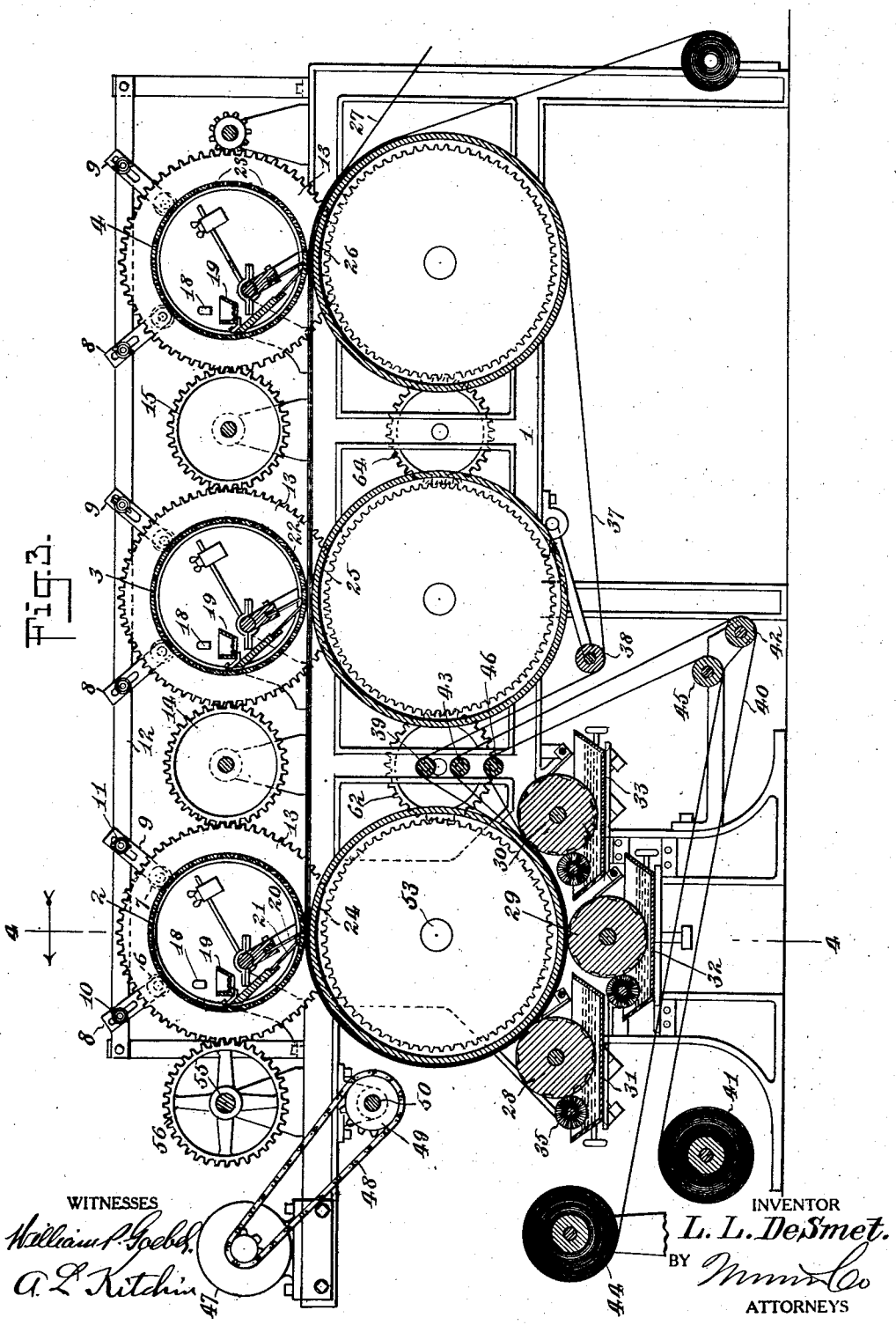

Fig. 3.

WITNESSES

William P. Goebel

A. L. Kitchin

INVENTOR

L. L. DeSmet.

BY Munn & Co

ATTORNEYS

June 8, 1926. 1,588,318

L. L. DE SMET

COMBINED DOT AND FLAT CLOTH PRINTING MACHINE

Filed Feb. 18, 1925 4 Sheets-Sheet 4

Fig. 4.

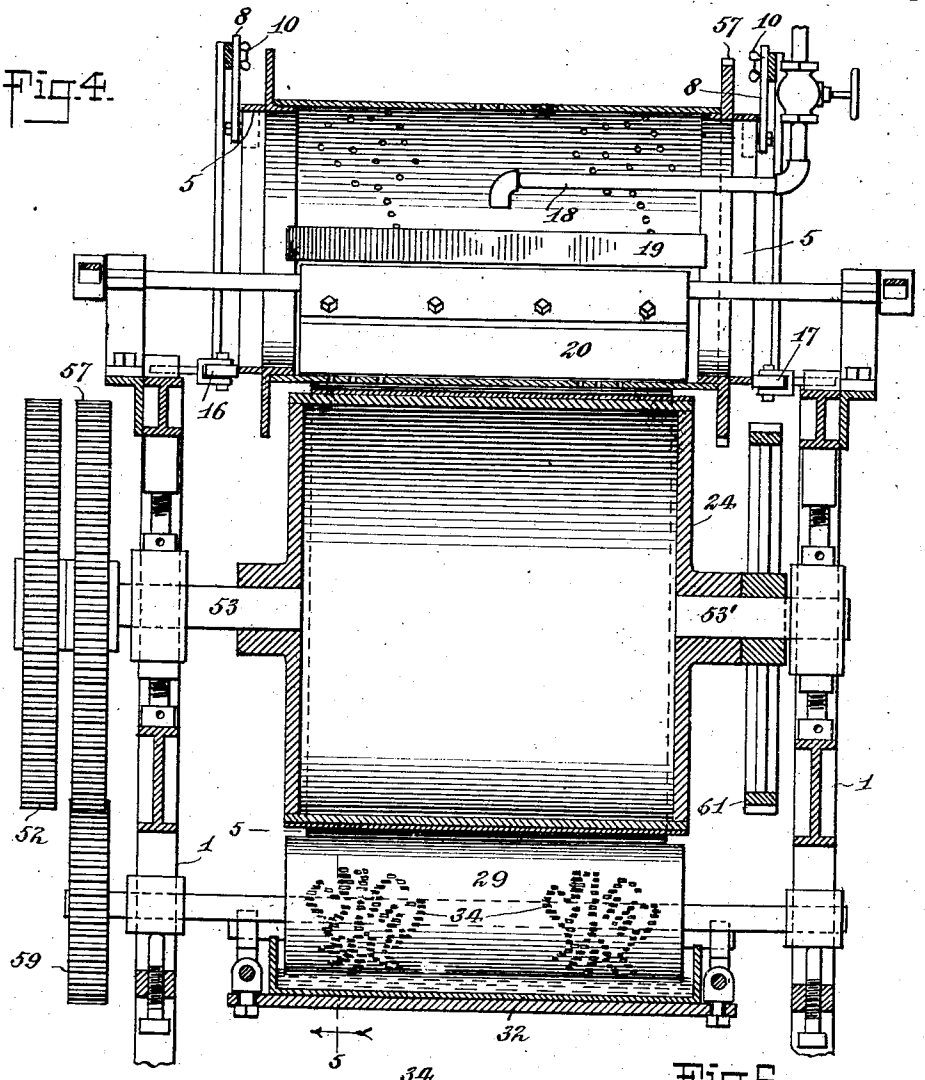

Fig. 5.

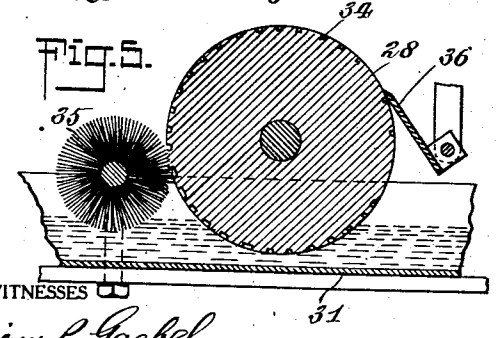

Fig. 6.

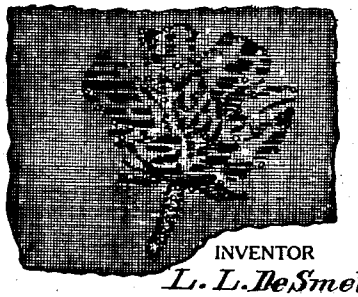

WITNESSES

William P. Goebel.

A. L. Kitchin

INVENTOR

L. L. DeSmet.

BY Munn & Co

ATTORNEYS

Patented June 8, 1926. 1,588,318

UNITED STATES PATENT OFFICE.

LIEVEN LOUIS DE SMET, OF FAIR LAWN, NEW JERSEY.

COMBINED DOT AND FLAT CLOTH PRINTING MACHINE.

Application filed February 18, 1925. Serial No. 10,103.

This invention relates to a combined scroll printing and dot or flock printing machine and has for an object to provide a construction wherein the parts are so arranged that the scroll printing is first performed and then the dot printing in any desired succession.

Another object of the invention is to provide a printing machine for printing on fabric wherein a flat printed surface is provided by certain parts of the machine to give an ornamental effect and then dots are placed on the fabric on top of the first printing by a flocking machine or in any position in respect thereto for giving a different effect.

A still further object in view is to provide a combined scroll and flock printing machine wherein the flock printing cylinders are positively held in their correct position while permitted to freely rotate.

In the accompanying drawings—

Figure 1 is a side view of a machine disclosing one embodiment of the invention.

Figure 2 is a top plan view of the machine shown in Figure 1.

Figure 3 is a sectional view through Figure 2, approximately on line 3—3.

Figure 4 is a transverse sectional view through Figure 3, approximately on line 4—4.

Figure 5 is an enlarged fragmentary sectional view through Figure 4 approximately on line 5—5.

Figure 6 is an enlarged fragmentary view of a piece of fabric which has been printed.

Referring to the accompanying drawing by numerals, 1 indicates a frame of any desired kind provided with suitable uprights and transverse bars which are positioned to accommodate the various parts and which need not be described. Carried by the frame 1 are a plurality of printing rollers 2, 3 and 4, said rollers being in the form of stencils and constructed similar to the printing rollers shown in my Patent No. 1,526,266. However, each of these rollers have specially prepared flanges 5 at each end which accommodate the retaining rollers 6 and 7 carried by diagonally adjustable supporting members 8 and 9, which members are rigidly clamped in the desired adjusted position by suitable clamping bolts 10 and 11 extending through an auxiliary frame 12. Each of the rollers 2, 3 and 4 is provided with a gear wheel 13 and said gear wheels are operatively connected together by suitable idlers 14 and 15 whereby all of the printing rollers will operate simultaneously and be held against movement longitudinally of the frame 1 by the rollers 6 and 7. Suitable guiding rollers 16 and 17 are carried by the frame 1 and act on the edges of the flanges 5 to maintain the various printing rollers or drums 2, 3 and 4 properly centered. These guiding rollers may be adjusted horizontally toward and from the rollers and locked in their adjusted position. The printing roller 2 is provided with apertures arranged to produce the desired design and through these apertures the printing paint or ink is allowed to flow. From a suitable supply, the paint or ink is forced through the pipe 18 from time to time and is discharged into the hopper 19 which discharges the paint or dye between the knives 20 and 21 whereby the ink or paint is held to a limited space and thereby is allowed to escape through the various apertures in the printing roller in the proper manner. The rollers 3 and 4 are made identical with roller 2 except that additional recesses 22 and 23 are provided to take care of the dots supplied by the previous roller in order that they will not be smeared.

As clearly outlined in my prior application above specified, the cloth to be printed first passes under roller 2, then under roller 3 and finally under roller 4, after which it is dried and is ready for disposal. The rollers 2, 3 and 4 and associated parts merely act to print or apply dots to the cloth whereas the structure arranged below the drum 24 acts to print designs on the cloth, said printing being commonly known as scroll printing. The drums 24, 25 and 26 co-act for supporting the cloth 27 as it passes through the machine. The drum 24 in addition to co-acting with drum 2 also co-acts with the scroll printing structure shown particularly in Figure 3. As indicated in this figure, there are provided printing rollers 28, 29 and 30 each having a design formed thereon and adapted to receive preferably different colored inks so that there will be three colors printed on the cloth when the structure shown in Figure 2 is used. The various rollers 28, 29 and 30 are supplied with printing fluid from suitable containers 31, 32 and 33. As indicated, the printing rollers 28, 29 and 30 and associated parts are constructed as

particularly shown in Figure 5. In this figure it will be seen that the roller 28 is provided with suitable depressions 34 for receiving the printing liquid from the container or pan 31. However, sometimes the trapped air in these depressions prevents the fluid from properly flowing therein and to take care of this condition, a brush roller 35 is provided and is continually partially submerged in the fluid in container 31 and is continually in contact with the roller 28 so as to brush the same and force ink into the corners of the various depressions 34. A scraping knife 36 is provided for removing any excess fluid in order that the only printing fluid which will be applied to the cloth will be that which is contained in the recesses 34. In order to cause a proper printing action of the various printing rollers 28 to 30, it is necessary to provide a blanket 37 which also acts as a base cloth for supporting the cloth 27 as the same passes beneath the rollers 2 to 4. The blanket 37 is an endless belt structure and passes across the top of the various drums 24, 25 and 26 and in addition, around the drum 26 back to the lower surface of drum 24, after being guided by a compensating roller 38 and a guiding roller 39. It will be noted that the blanket 37 contacts with the drum 24 and next to this blanket comes the foundation cloth 40 which passes from a supply 41 over guiding roller 42 and guiding roller 43 to drum 24. The cloth 27 is first wound on the spool or bar 44 and is guided by the roller 45 to the roller 46 and from thence to the drum 24. As the cloth 27 passes around the drum 24, the printing roller 30 functions to print a certain design thereon in a certain color, then printing roller 29 functions and finally roller 28 functions. As this is what is commonly known as scroll printing and does not project above the cloth but is absorbed thereby, the same dries rapidly and will not smear so that when the printed designs pass beneath roller 2, said roller may apply dot printing thereto. In addition, rollers 3 and 4 if desired, may apply dot printing and apply the same in different colors. Preferably, a flower or some particular design is printed on the cloth by the scroll printing rollers 28 to 30 and then the dot printing rollers 2 to 4 will print the center of the flower and certain other parts so as to give a raised effect thereto and thereby produce a more ornamental flower or other ornamentation on the cloth. After the cloth has passed roller 4, it is guided by suitable rollers to a drying machine and is finally disposed of in any desired manner.

The machine may be driven from any suitable power, as for instance, through the electric motor 47 which actuates the sprocket chain 48 passing over sprocket 49 rigidly secured to the shaft 50, which shaft carries a gear wheel 51 at one end, which gear wheel meshes continually with the gear wheel 52 rigidly secured to shaft 53 and also with the gear wheel 54 rigidly secured to the shaft 55. The shaft 55 extends entirely across the machine and at the end opposite gear wheel 54 is supplied with a gear wheel 56 adapted to mesh with the gear wheel 13 rigidly secured to the drum or roller 2. The shaft 53 is rigidly secured to drum 24 and has secured rigidly thereto a gear wheel 13 which is preferably the same size as the gear wheel 52 as shown in Figure 4. The gear wheel 13 continually meshes with the various gear wheels 58, 59 and 60 which are rigidly secured to the rollers 28, 29 and 30 whereby said rollers are caused to properly function in respect to the drum 24 and associated parts. As shown in Figure 4, a stub shaft 53′ extends from the opposite end of drum 24 to shaft 53 and carries a gear wheel 61. This gear meshes with an idler 62 which in turn meshes with gear wheel 63 rigidly connected with drum 25. An idler 64 meshes continually with gear 63 and also with gear 65, which latter gear is rigidly secured to drum 26.

By reason of the arrangement of the train of gears as just described and illustrated particularly in Figures 1 and 2, the various drums 24, 25 and 26 are rotated in unison. A similar arrangement is made for the rollers or drums 2, 3 and 4 as illustrated particularly in Figure 2. However, on one end of each of the rollers 2, 3 and 4, there is provided a flange 66 adapted to mesh with the respective guiding idlers 67 which function to hold the rollers in proper position while allowing a free rotation thereof. The antifriction members 6 and 7 also act to hold the various rollers 2, 3 and 4 in proper position. It will be observed that both the printing structure in the lower part of the frame and the printing structure in the upper part are so co-ordinated as to function in proper sequence whereby cloth passing through the machine will be properly printed in various colors and with flat printing as well as raised or dot printing. It will be noted that any of the printing rollers 28, 29 and 30 may be eliminated or may be left dry of printing ink so that only one or more rollers may be used to print at any time, though preferably, a number of rollers are used in order that a number of different colors might be provided. It is also evident that one or more of the rollers 2, 3 and 4 might be used without departing from the spirit of the invention.

What I claim is:

1. In a printing apparatus, means for printing a fabric, means for flock printing on the same fabric before it leaves the printing apparatus, said last mentioned means including a plurality of flock printing rollers

formed and positioned to print different colors simultaneously on said fabric in a certain position in respect to the printing done by the first mentioned printing means.

2. A cloth printing apparatus, comprising a printing machine for printing flat designs on fabric, a plurality of dot (or flock) printing rollers co-acting with the printing structure, said dot (or flock) printing rollers being adapted to print different colors, the second roller and succeeding rollers having depressions for accommodating the dots printed by the previous roller whereby different colors may be printed without smearing.

LIEVEN LOUIS DE SMET.