US 20080104923A1

(19) United States

(12) Patent Application Publication

(10) Pub. No.: US 2008/0104923 A1

(43) Pub. Date: May 8, 2008

Boxhorn et al.

(54) ARCHITECTURAL COMPOSITE PANELS AND COMPOSITE SYSTEMS

(76) Inventors: **George R. Boxhorn**, Elm Grove, WI (US); **John F. Boxhorn**, Mukwonago, WI (US)

Correspondence Address:
GODFREY & KAHN S.C.
780 NORTH WATER STREET
MILWAUKEE, WI 53202

(21) Appl. No.: **11/557,194**

(22) Filed: **Nov. 7, 2006**

Publication Classification

(51) **Int. Cl.**
E04C 2/42 (2006.01)

(52) **U.S. Cl.** **52/663**

(57) **ABSTRACT**

Composite panels and cladding systems for use in architectural projects are disclosed. The composite panels include a base layer having a plurality of perforations or apertures formed therein and a mesh layer, wherein woven strands of the mesh layer are visible, engage and/or extend through the perforated base layer. The mesh layer is preferably a woven metallic mesh or fabric. The cladding systems of the present invention include a plurality of composite panels configured to cover a large surface area, such as a wall, railing or ceiling.

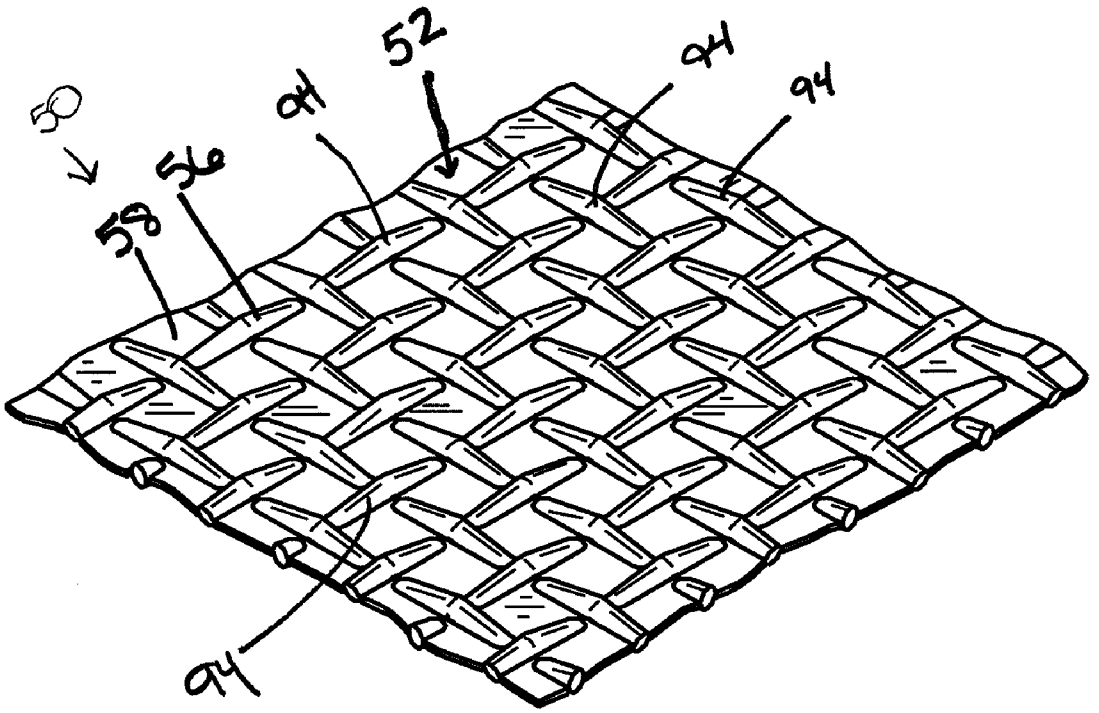

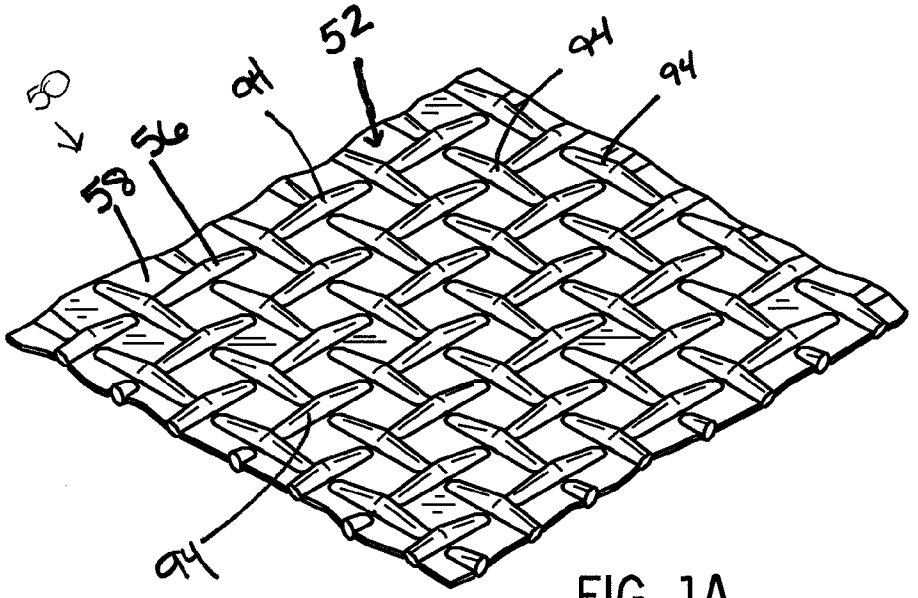

FIG. 1A

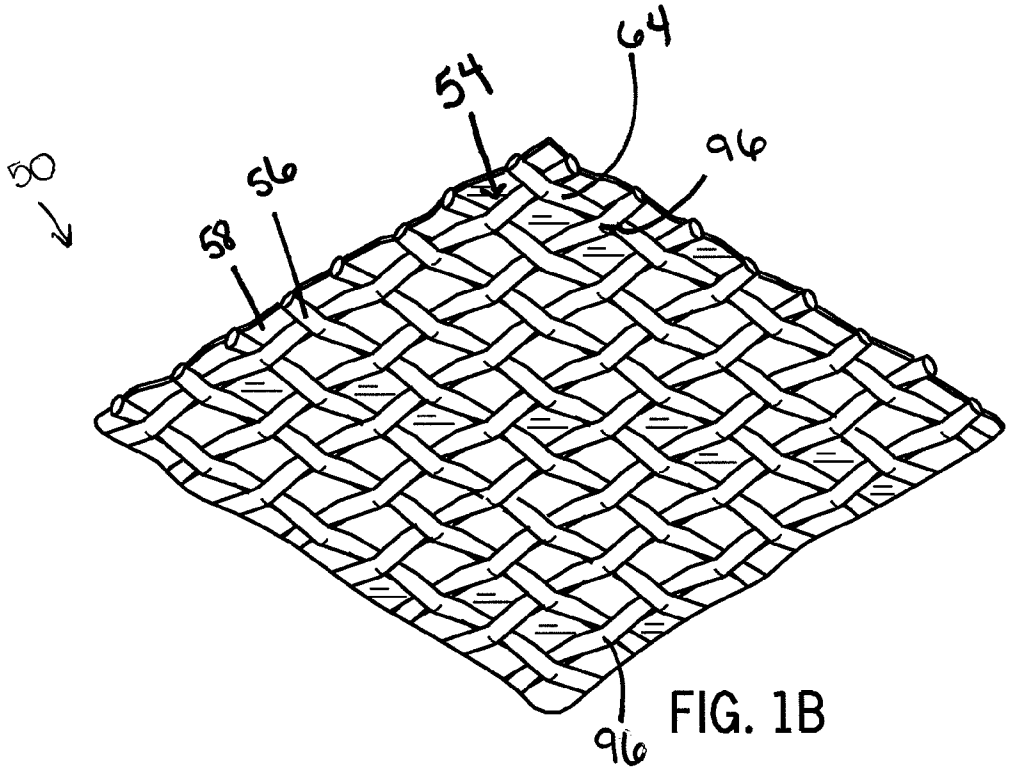

FIG. 1B

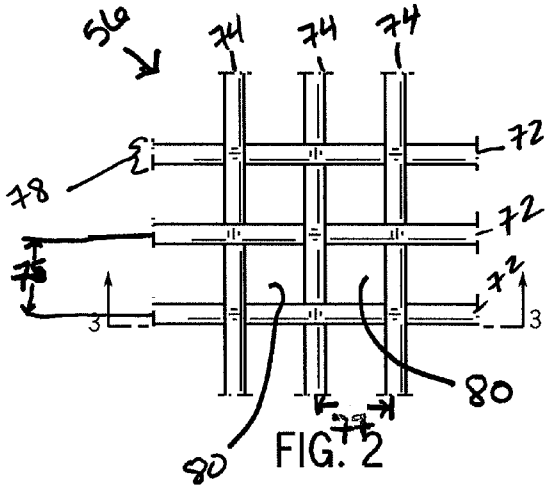

FIG. 2

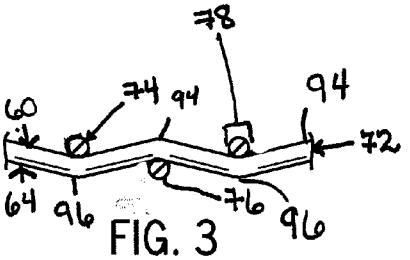

FIG. 3

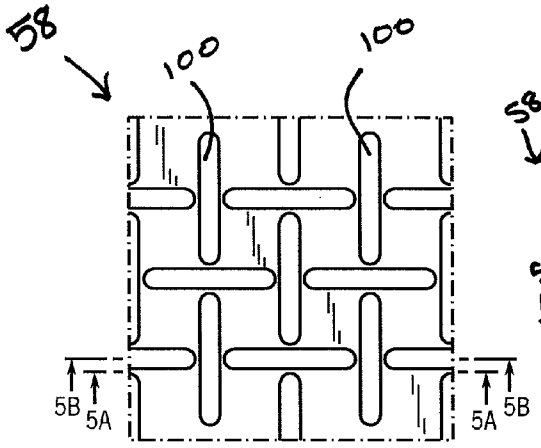

FIG. 4

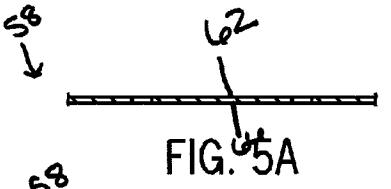

FIG. 5A

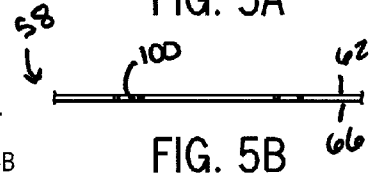

FIG. 5B

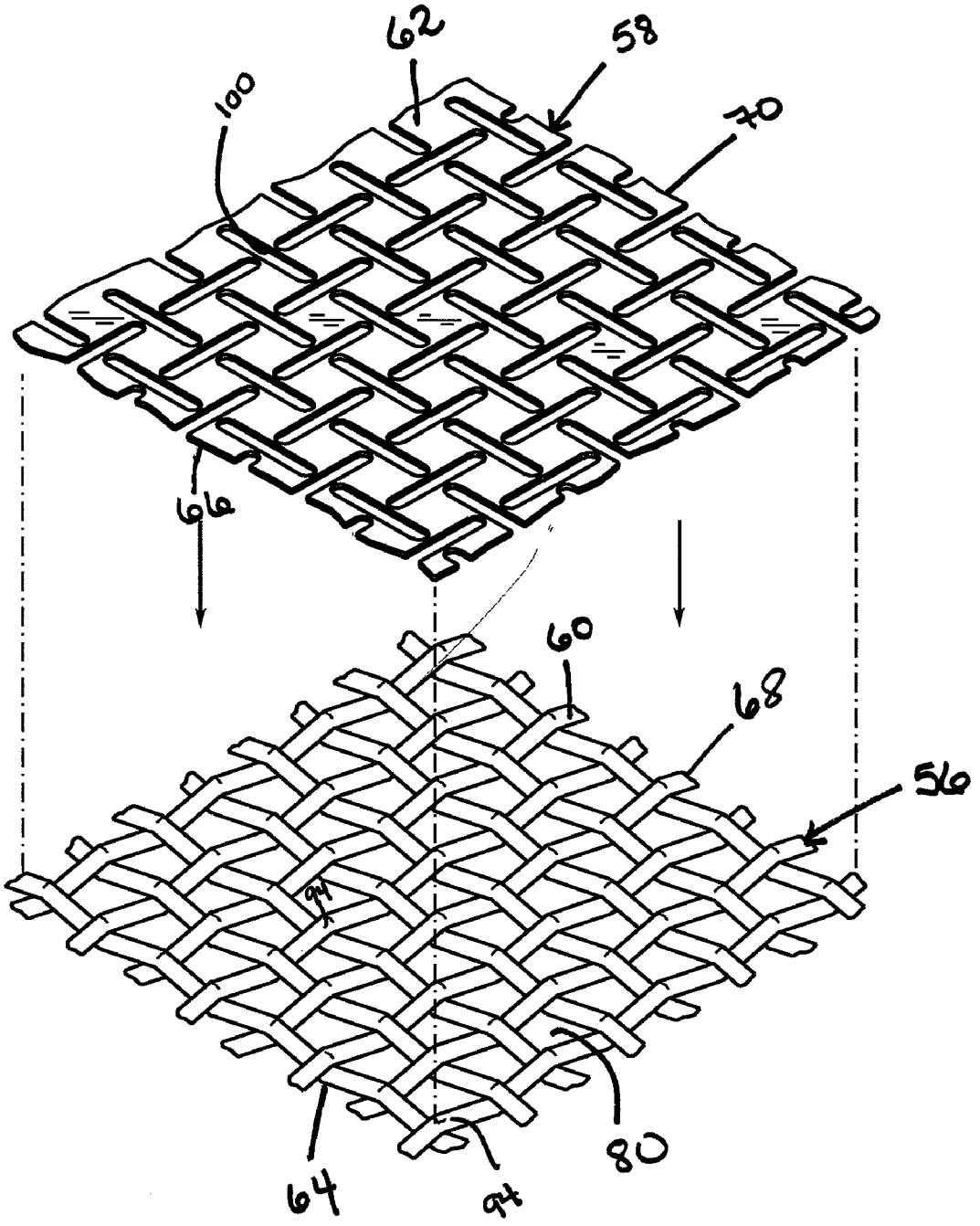

FIG. 6

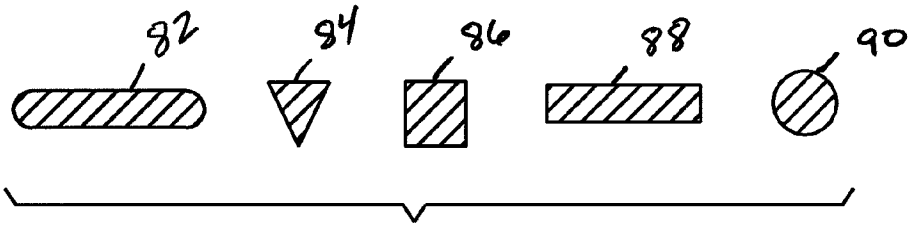

FIG. 7

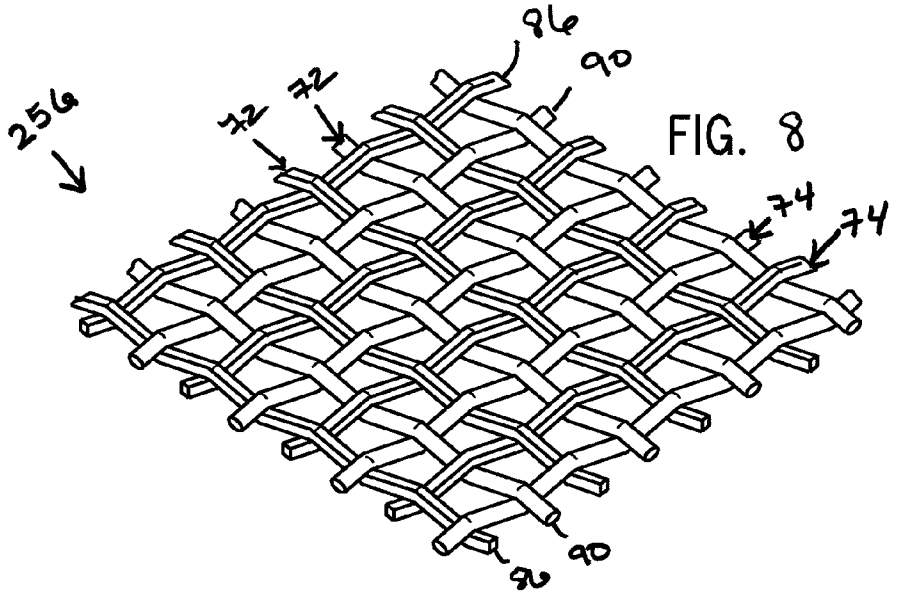

FIG. 8

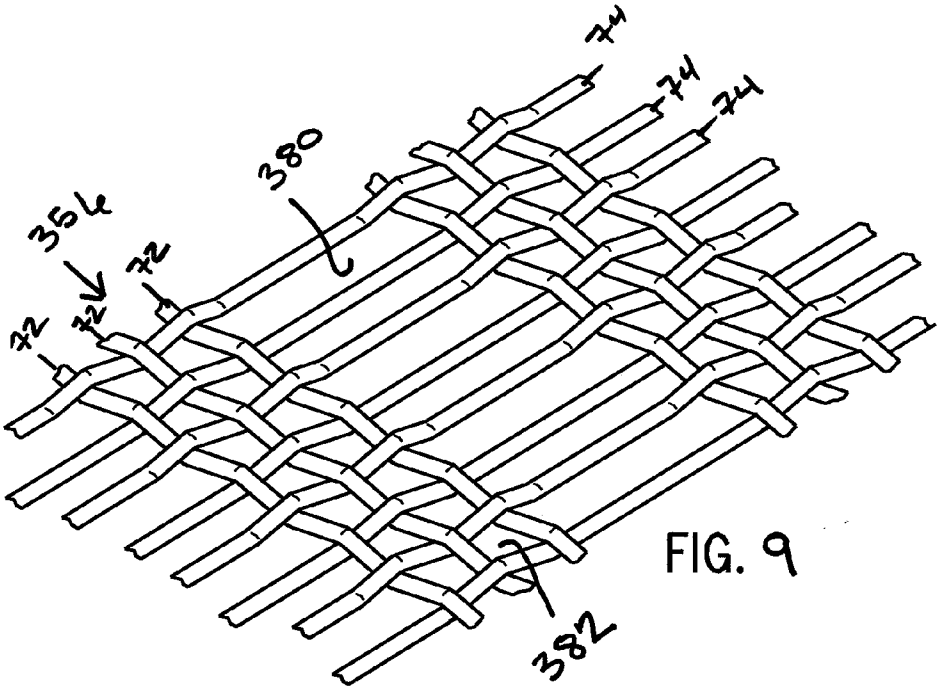

FIG. 9

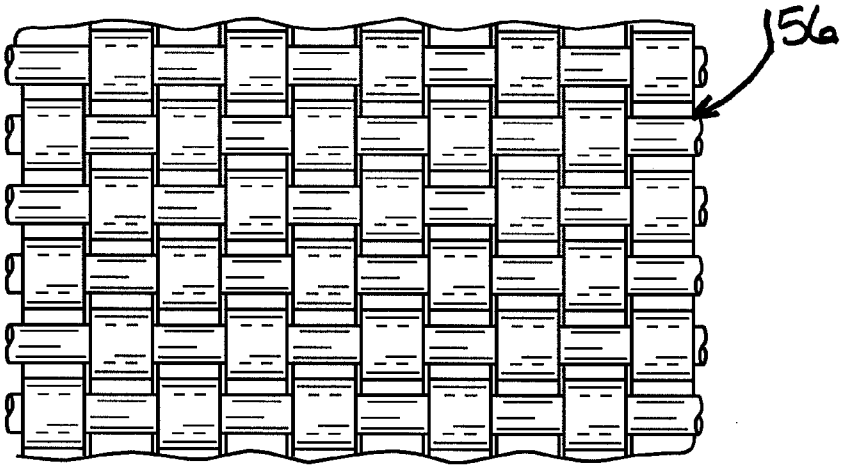

FIG. 10

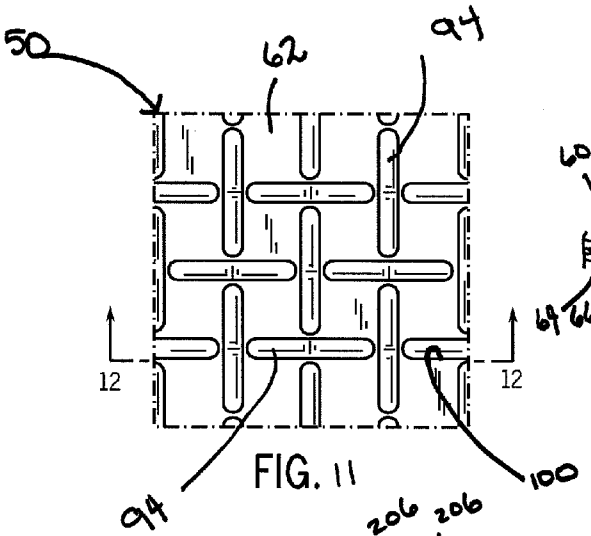

FIG. 11

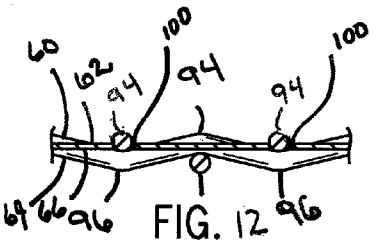

FIG. 12

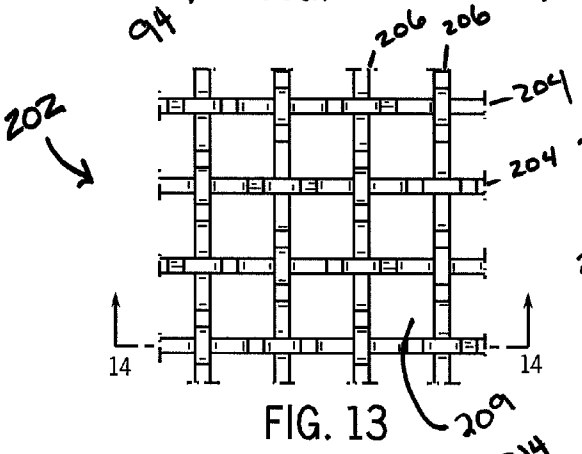

FIG. 13

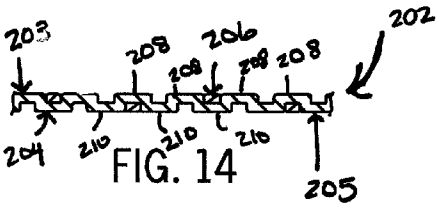

FIG. 14

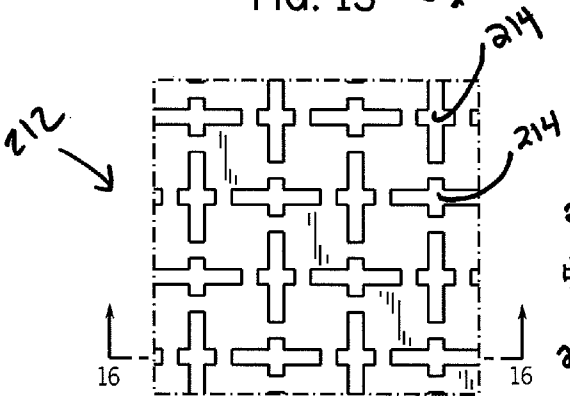

FIG. 15

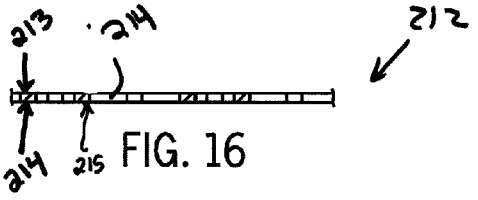

FIG. 16

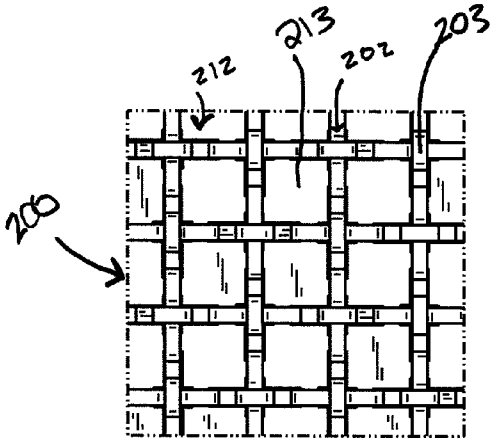

FIG. 17

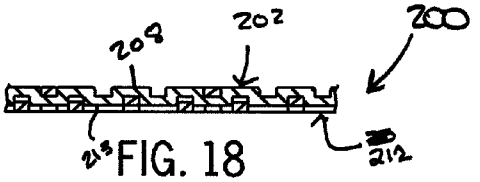

FIG. 18

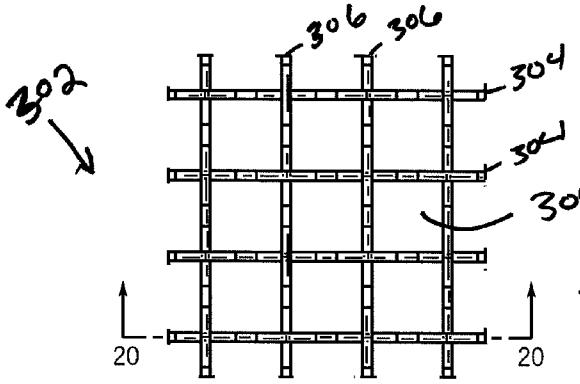

FIG. 19

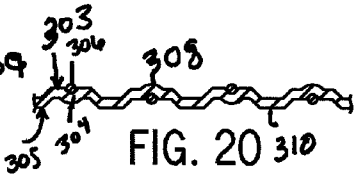

FIG. 20

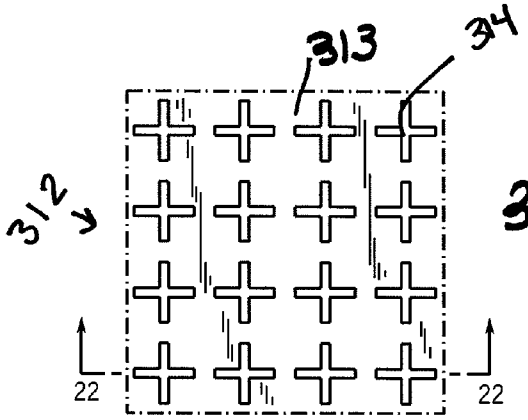

FIG. 21

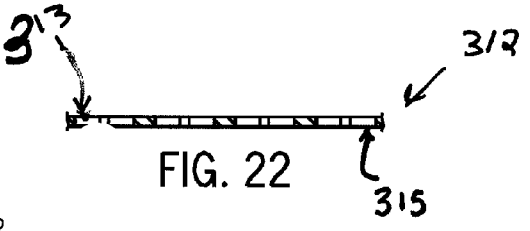

FIG. 22

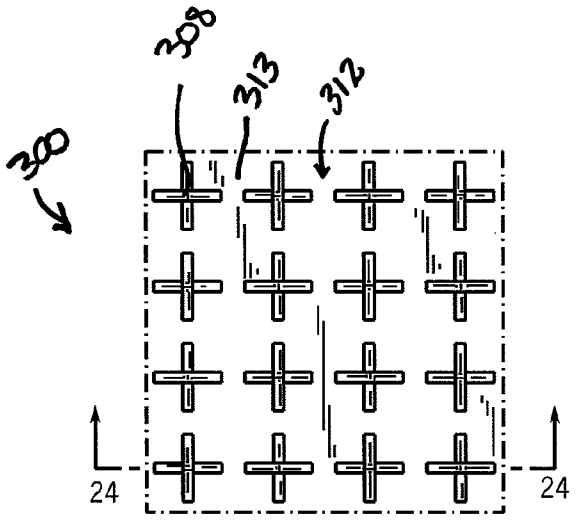

FIG. 23

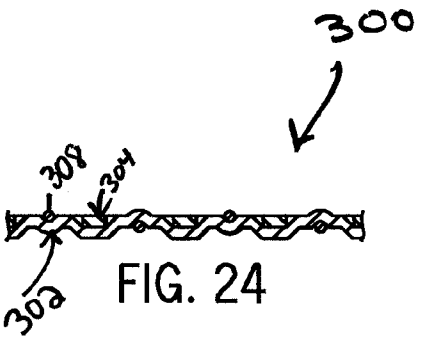

FIG. 24

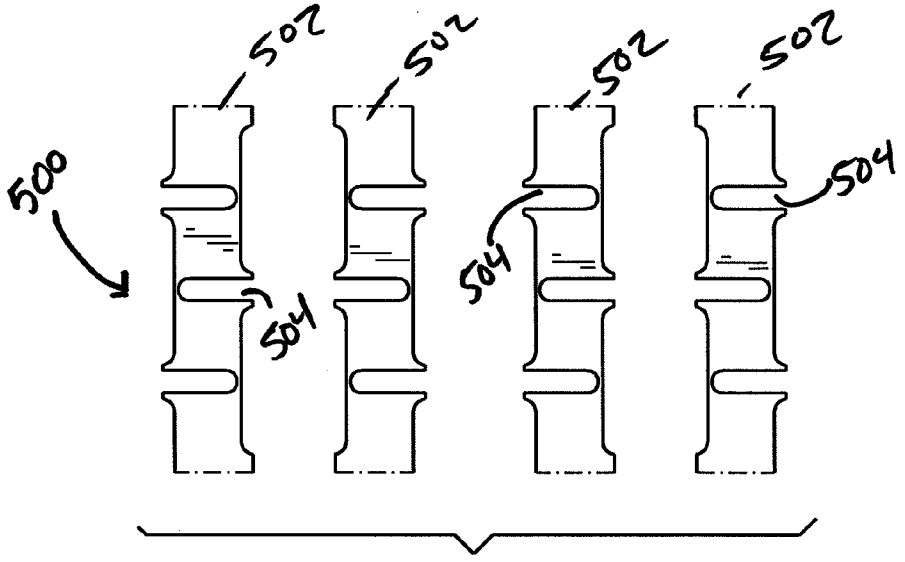

FIG. 25

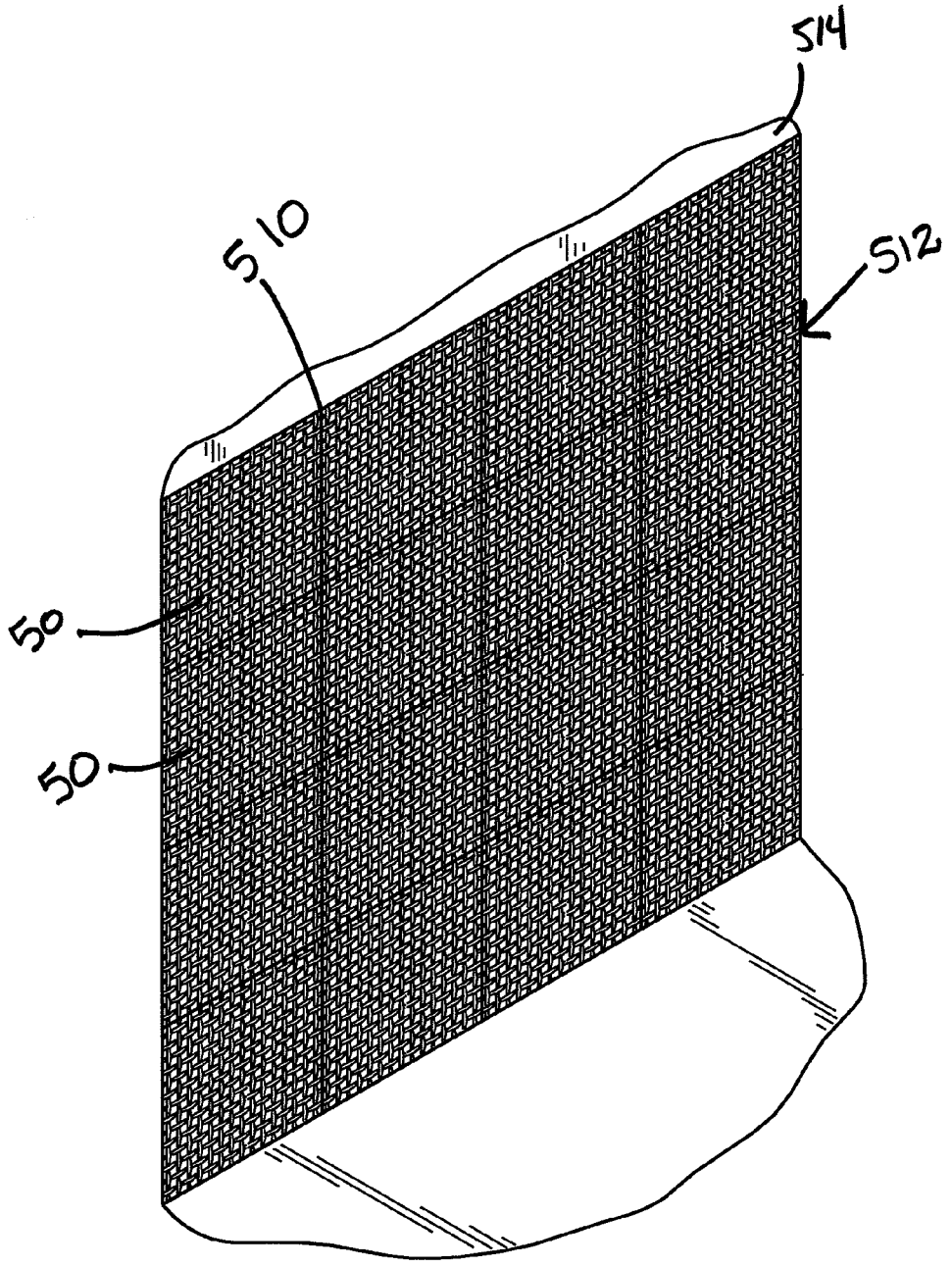

FIG. 26

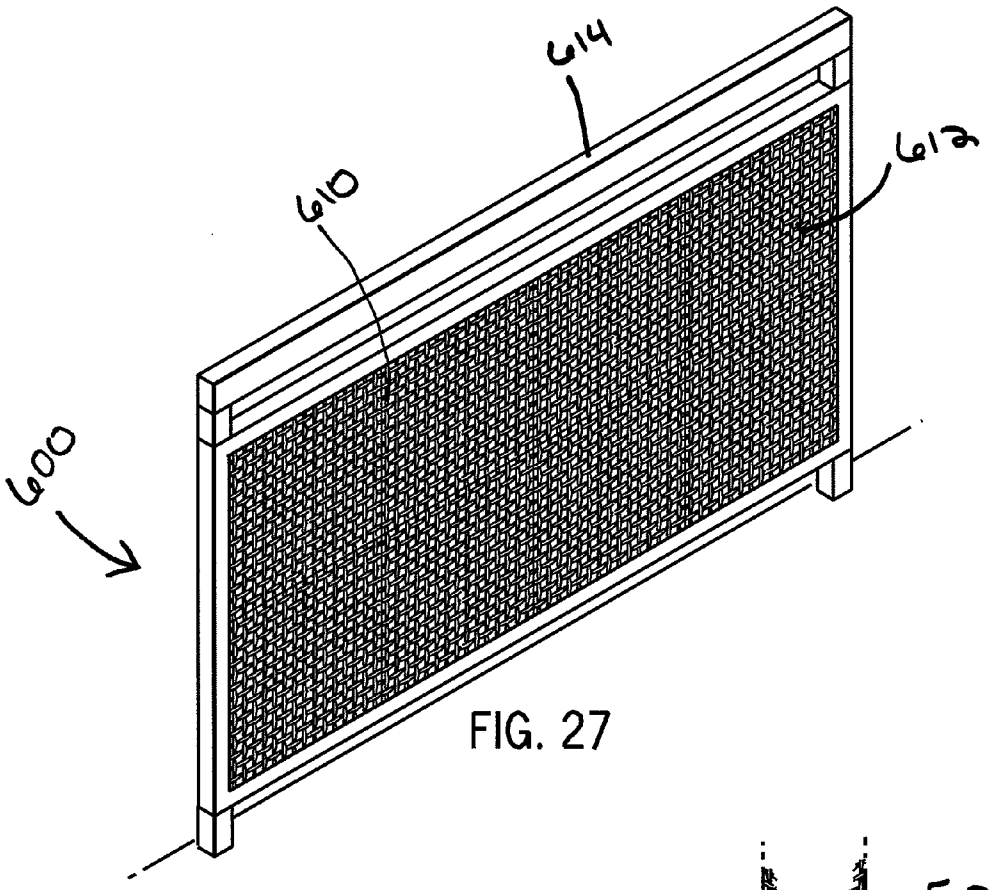

FIG. 27

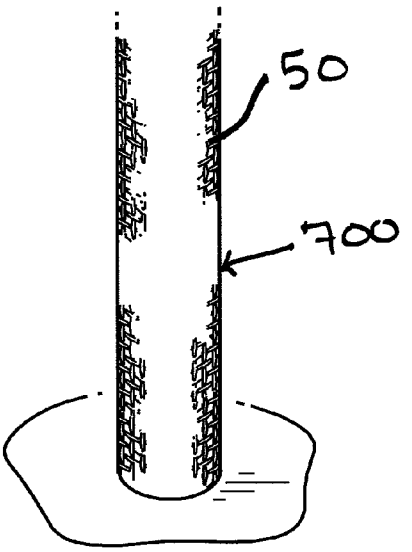

FIG. 28

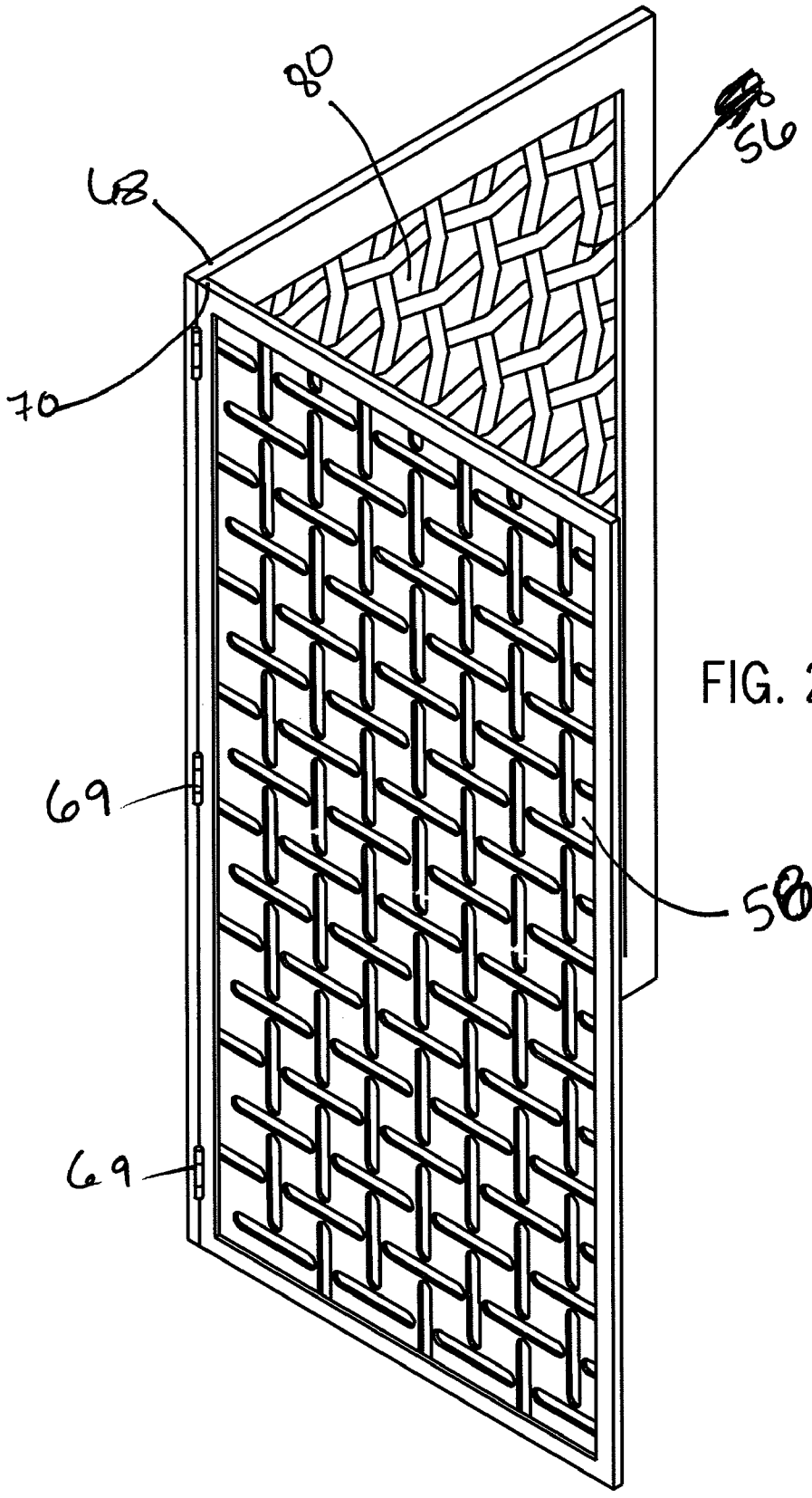

FIG. 29

ARCHITECTURAL COMPOSITE PANELS AND COMPOSITE SYSTEMS

BACKGROUND OF THE INVENTION

[0001] The present invention relates generally to the field of interior and/or exterior building surfaces, and more particularly, to architectural panels or cladding, systems and methods of manufacture thereof for use in flooring, ceilings, wall panels, railings, space dividers and/or for purely decorative architectural purposes.

[0002] Materials such as metal, wood, laminates, composites, brick or other masonry, concrete, plaster and plastic are used in a wide variety of wall, ceiling and floor cladding constructions and architectural projects. In large constructions, such as in hospitals, airports, banks, malls, office or industrial space, schools, hotels and the like, materials such as sheet metal, metal mesh, glass or concrete are typically used in place of wood, laminated or composite materials in order to provide the required durability.

[0003] When metal panels are used, they are frequently embossed, etched, corrugated or stamped in order to achieve the impressive appearance required for such applications. Concrete cladding or structural systems are durable, but can be expensive, heavy and difficult to form and install. Glass facades are attractive, but not appropriate for all building applications. Where resins and wood are utilized, they are typically coated, painted or laminated to provide the required protection from the elements, and are also not durable enough for some projects.

[0004] As such, cladding products that satisfy the structural requirements of the building or cladding project (such as strength, durability, light transmission or reflectivity and air circulation) and that also provide a unique, textured and aesthetically pleasing appearance are limited in selection. Accordingly, a need exists for cladding panels and/or decorative surface systems that have a wide variety of architectural application and that can be custom designed to meet the structural and aesthetic requirements of a particular project.

SUMMARY OF THE INVENTION

[0005] The present invention provides, in part, architectural panels, surfaces and/or architectural systems for use in flooring, ceilings, wall panels, railings, space dividers or for purely decorative architectural purposes and methods of manufacture thereof.

[0006] The architectural surfaces of the present invention comprise a composite panel or series of composite panels. Each composite panel includes at least one woven mesh layer in combination with a perforated base layer or sheet.

[0007] The mesh layer comprises a plurality of interwoven strands of material. The mesh layer is preferably a woven wire fabric or mesh constructed of any one or more metal materials including, but not limited to, steel, aluminum and aluminum alloys, copper and copper alloys, nickel and nickel alloys, silver, titanium or any suitable wire material and combinations thereof, with any type of color, coating, finish or treatment (such as galvanizing, polishing or anodizing). The mesh layer can also be constructed of plastic, glass, fiberglass, wood or another material capable of being drawn into strands and woven together.

[0008] Preferably, the strands are provided with crimps or corrugations and are woven together, providing each surface of the mesh layer with a pattern or arrangement of projections that extend outwardly from each surface. Depending on the particular composite panel or system application, the mesh layer also preferably includes a plurality of openings. The size and number of openings depends on the particular type of weave and wire diameter selected, the amount of air transmission, light and/or reflectivity desired in the composite panel, the type of base layer utilized, and the particular end-use application. In privacy screen or space divider applications, a mesh layer having no openings can be used.

[0009] The base layer includes a plurality of apertures or perforations configured to align with or arranged in substantially the same pattern as the outwardly extending projections on the mesh layer. Like the mesh layer, the base layer is preferably constructed of a metal material such as steel, aluminum and aluminum alloys, copper and copper alloys, nickel and nickel alloys, silver, titanium or any combinations thereof, with any type of color, coating, finish or treatment (such as galvanizing, polishing or anodizing). The base layer may further be etched, stamped or embossed if required by the aesthetic requirements of the project. The base layer can also be constructed of plastic, glass, concrete, fiberglass, wood or any material typically used in building or architectural projects.

[0010] The composite panel is assembled such that the base layer is aligned with and overlies the mesh layer. In particular, the base layer and the mesh layer are assembled so that the projections on the mesh layer are visible through, cooperate with, engage and/or extend t least partially through the apertures in the base layer. Preferably, the base layer and the mesh layer fit together or otherwise engage each other in a manner that minimizes the distance between the two layers and properly positions the mesh layer with respect to the base layer. Once aligned in this manner, the mesh layer and the base layer are secured together by any means known to those skilled in the art.

[0011] The composite panels of the present invention are reversible such that either surface (or both surfaces) can be used as the exterior or viewer's side of the panel, depending on the architectural application of the composite panel. In applications where the mesh layer is the exterior or visible layer, the outwardly extending projections provide the composite panel with structural depth and three dimensional texture. In applications where the base layer is the exterior or visible layer, the outwardly extending projections on the mesh layer are at least partially visible and/or extend through the perforations in the base layer to create a unique visual impression or surface style.

[0012] The present invention also includes, in part, a architectural system comprising a series of abutting or contiguous composite panels to create a large area, such as a floor or wall surface. The panels can be assembled so that there is no visible seam. The cladding system may include a plurality of composite panels that are substantially identical in appearance and construction so as to form a uniform, large continuous surface. Alternatively, the cladding system can comprise a plurality of composite panels of differing constructions and materials to provide a unique visual impression to the building surface, inlay or railing. The composite panels may be welded, adhered or fastened together by any means known to those skilled in the art. For ease of installation, the composite panels may be secured to another planar member such as MDF (medium density fiberboard), wood or metal surfaces before installation to the

building surface, or alternatively, the composite panels can be secured directly to stud backup, masonry, or other common substrates.

[0013] Each of the composite panels utilized in a given wall, ceiling or cladding system need not be the same composite panel and can be constructed of mesh and base layers of different constructions, materials, colors, textures, shapes and the like based on design choice and desired aesthetic characteristics to form a pattern or ornamental design on the surface.

[0014] It should also be noted that the composite panels and systems of the present invention may be used in association any type of decorative or architectural projects, such as for ventilation, screens, privacy, sun shades, infill panels, grilles, security, ceiling panels, shelving, shower enclosures, windows, furniture, light fixtures and the like, and are not limited to one particular size or shape of composite panel, or composite panel system. It can be seen that the composite panels and architectural systems of the present invention have three dimensional depth, providing an impressive and aesthetically pleasing appearance and can be used in any number of architectural projects. In addition to garnering a unique visual impression, the composite panels and systems of the present invention are constructed so as to be durable and resistant to damage.

[0015] It will be understood by those skilled in the art that one or more aspects of this invention can meet certain objectives, while one or more other aspects can lead to certain other objectives. Each objective may not apply equally, in all instances, to every aspect of the present invention. As such, these and other objects can be viewed in the alternative with respect to any one aspect of the present invention.

[0016] Other objects, features, benefits and advantages of the present invention will be apparent in this summary and descriptions of the disclosed embodiments, and will be readily apparent to those skilled in the art. Such objects, features, benefits and advantages will be apparent from the above as taken in conjunction with the accompanying figures and all reasonable inferences to be drawn therefrom.

BRIEF DESCRIPTION OF THE DRAWINGS

[0017] FIG. **1**A is a perspective view of a composite panel, showing the first façade surface thereof, with the base layer overlying the mesh layer;

[0018] FIG. **1**B is a perspective view of the composite panel illustrated in FIG. **1**A, showing the second façade surface thereof, with the mesh layer overlying the base layer;

[0019] FIG. **2** is a plan view of the mesh layer illustrated in FIGS. **1**A and **1**B;

[0020] FIG. **3** is a cross-sectional view of the mesh layer illustrated in FIG. **2**, taken along the line **3**-**3**;

[0021] FIG. **4** is a plan view of the base layer illustrated in FIGS. **1**A and **1**B;

[0022] FIG. **5**A is a cross-sectional view of the base layer illustrated in FIG. **4**, taken along the line **5**A-**5**A;

[0023] FIG. **5**B is a cross-sectional view of the base layer illustrated in FIG. **4**, taken along the line **5**B-**5**B;

[0024] FIG. **6** is an exploded perspective view of the composite panel illustrated in FIGS. **1**A and **1**B;

[0025] FIG. **7** is a cross-sectional view of a plurality of different shaped wire strands for use in the present invention;

[0026] FIG. **8** is a perspective view of a mesh layer for use in the present invention, showing woven wire strands of different cross sectional shape;

[0027] FIG. **9** is a perspective view of a mesh layer for use in the present invention, showing an alternate weave style;

[0028] FIG. **10** is a perspective view of a mesh layer for use in the present invention, showing an alternate weave style;

[0029] FIG. **11** is a plan view of the composite panel illustrated in FIGS. **1**A and **1**B;

[0030] FIG. **12** is a cross-sectional view of the composite panel illustrated in FIGS. **1**A, **1**B and **11**, taken along the line **12**-**12**;

[0031] FIG. **13** is a plan view of a mesh layer utilized in an alternate composite panel, consistent with the teachings of the present invention;

[0032] FIG. **14** is a cross-sectional view of the mesh layer illustrated in FIG. **13**, taken along the line **14**-**14**;

[0033] FIG. **15** is a plan view of a base layer utilized in the alternate composite panel, consistent with the teachings of the present invention;

[0034] FIG. **16** is a cross-sectional view of the base layer illustrated in FIG. **15**, taken along the line **16**-**16**;

[0035] FIG. **17** is a plan view of the composite panel constructed with the mesh layer and base layer illustrated in FIGS. **13** through **16**;

[0036] FIG. **18** is a cross-sectional view of the composite panel illustrated in FIG. **17**;

[0037] FIG. **19** is a plan view of a mesh layer utilized in a second alternate composite panel, consistent with the teachings of the present invention;

[0038] FIG. **20** is a cross-sectional view of the mesh layer illustrated in FIG. **19**, taken along the line **20**-**20**;

[0039] FIG. **21** is a plan view of a base layer utilized in the second alternate composite panel, consistent with the teachings of the present invention;

[0040] FIG. **22** is a cross-sectional view of the base layer illustrated in FIG. **21**, taken along the line **22**-**22**;

[0041] FIG. **23** is a plan view of the composite panel constructed with the mesh layer and base layer illustrated in FIGS. **19** through **22**;

[0042] FIG. **24** is a cross-sectional view of the composite panel illustrated in FIG. **23**;

[0043] FIG. **25** is a base layer comprising a plurality of strips of material, consistent with an alternate embodiment of the present invention;

[0044] FIG. **26** illustrates a composite panel system consistent with the teachings of the present invention, comprising a plurality of composite panels incorporated into a wall surface;

[0045] FIG. **27** illustrates a first alternate composite panel system consistent with the teachings of the present invention, comprising a plurality of composite panels incorporated into a railing or barrier member;

[0046] FIG. **28** illustrates a second alternate composite panel system consistent with the teachings of the present invention, comprising a larger composite panel incorporated into a column cover; and

[0047] FIG. **29** illustrates an additional composite panel system consistent with the teachings of the present invention, comprising a base layer that is pivotable with respect to the mesh layer.

DETAILED DESCRIPTION OF PREFERRED EMBODIMENTS

[0048] FIGS. **1** through **25** illustrate several embodiments of composite panels for use in architectural or interior design and/or in accordance with the present invention. While the invention may be susceptible to embodiment in different forms, there are shown in the drawings, and herein are described in detail, certain illustrative embodiments with the understanding that the present disclosure is to be considered an exemplification of the principles of the invention, and is not intended to limit the invention to those as illustrated and described herein. Additionally, features illustrated and described with respect to one embodiment could be used in connection with other embodiments.

[0049] A composite panel **50** in accordance with one embodiment of the present invention is illustrated in FIGS. **1** through **6**, **11** and **12**. The composite panel **50** includes a first façade surface **52** and a second façade surface **54**, each of the façade surfaces **52** and **54** having distinct aesthetic and/or ornamental features. As shown in FIGS. **1**A and **1**B. The composite panel **50**, in its simplest form, comprises a woven or mesh layer **56** and a base layer **58**. Each of the mesh and base layers **56** and **58** has a first face or surface **60** and **62**, respectively, and a second, opposing face or surface **64** and **66**, respectively. In addition, each of the layers **56** and **58** has side edges, indicated generally at **68** and **70**, respectively, defining the perimeter of each of the layers. Although a generally square composite panel **50** is illustrated, the composite panels of the present invention can be provided in any shape, such as circular, triangular, rectangular and/or any polygonal shape required or desired in the end-use application of the panel.

[0050] The mesh layer **56** comprises a plurality of interwoven longitudinal (warp) and transverse (shute) wire strands **72** and **74**, respectively. As illustrated in FIGS. **2** and **3**, each of the longitudinal wire strands **72** have a circular cross-sectional shape **76** and have substantially similar diametral dimensions **78**. Likewise, each of the transverse wire strands **74** have a circular cross-sectional shape **76** and have substantially similar diametral dimensions **78**. Each of the wire strands **72** and **74** are preferably pre-crimped in the desired crimp style prior to assembly of the mesh layer **56**; however, uncrimped wire strands may be utilized to form the mesh layer **56**, as described in more detail below.

[0051] The wire strands **72** and **74** are assembled or woven together by any means known to those skilled in the art including, but not limited to, mechanically woven or knitted, stamped, welded or otherwise formed into the desired mesh layer configuration without departing from the broader aspects of the present invention. Preferably, the longitudinal and transverse wire strands **72** and **74** intersect but do loop around each other.

[0052] As illustrated in the Figures, in certain preferred embodiments, the mesh layer **56** includes a plurality of openings **80**. The distance or pitch between the center point of adjacent wire strands in each of the longitudinal and transverse directions, indicated as **75** and **77**, respectively, in FIG. **2**, is ultimately a matter of design choice, and can depend on the amount of open space desired for a particular application. As such, the number of openings per linear inch in a particular mesh layer depends on the particular type of weave and wire diameter selected, the amount of light and/or reflectivity desired in the composite panel **50**, the type of base layer **58** utilized, and the particular end-use application. Openings **80** may be any shape, such as square, rectangular, circular, D-shaped, W-shaped and/or H-shaped. Consistent with the broader aspects of the present invention, mesh layers **156** having little or no open areas are also contemplated by the present invention, as illustrated in FIG. **10**.

[0053] Turning again to FIGS. **3** and **6**, the crimps of the strands **72** and **74** provide the woven mesh layer **56** with a plurality of projecting portions **94** and **96** that extend outwardly from each of the first and second surfaces **60** and **64**, respectively. The size, number and configuration of the projecting portions **94** and **96** on each of the surfaces **60** and **64** of the mesh layer **56** is determined, at least in part, the crimp style and/or number of corrugations in the wire strands **72** and **74**, the weave style, the wire diameter, and/or the wire pitch selected. As illustrated in FIGS. **1**A, **1**B, **3** and **6**, the projecting portions **94** and **96** on each of the surfaces **60** and **64**, respectively, are preferably configured in a repeating or regular pattern, however, unique and/or non-repeating patterns of projecting portions **94** and **96** can also be utilized in the mesh layer.

[0054] As will be at once recognized by those skilled in the art, the shape and crimp style of the wire strands **72** and **74** can vary extensively, depending on the particular end-use application, the type of base layer **58** or layers utilized, the structural requirements for the particular composite panel **50** and desired aesthetic characteristics. As indicated in FIGS. **7** and **8**, any cross-sectional shape of wire may be utilized to form the mesh layer including, but not limited to, planar wire **82** which may be flat with round corners, triangular wire **84**, square wire **86**, rectangular wire **88** and round wire **90**. Further, mesh layers **256** contemplated by the present invention can include wires of different cross-sectional shape, within the longitudinal direction, transverse direction or both, as illustrated in FIG. **8**.

[0055] In addition, the mesh layer can be woven with a wide range of different diameter wires. Further, each longitudinal wire member and each transverse wire member can comprise a plurality of smaller diameter or finer wire strands which may be aligned parallel to each other and secured or woven together, forming a single longitudinal and/or transverse wire member. The wire strands **73** and **74** may be twisted, perhaps randomly or regularly twisted, to thereby affect not only the visual effect of the mesh layer **56** but also the reflectance of the mesh layer **56** and the diffusion of light reflected and transmitted through the mesh layer **56**. The wire strands **72** and **74** may, in addition or alternatively, be etched, embossed and/or stamped in an ornamental fashion to also affect the aesthetic impression and/or visual appeal of the mesh layer **56**. The wires strands may also be anodized or otherwise coated to provide the mesh layer **56** with color.

[0056] If the wire strands **72** and **74** are precrimped, the crimp style may include, but is not limited to, plain crimp, double crimp, flat top, lockcrimp, intercrimp or combinations or hybrids of different crimp styles. The type of weave utilized in a particular mesh layer can also be varied, depending on the particular base layer **58** utilized, the aesthetic and/or structural requirements of the composite panel **50** and/or the given end-use application of the composite panel **50**. In particular, the type of weave, and in turn

the size of the openings **80**, affects the amount of light passing through (or reflected by) the mesh layer **56** and the amount of the base layer **58** that can be seen through the mesh layer **56**. The type of weave can include, but is not limited to plain, twilled, Dutch, heddle, stranded and combinations thereof. As illustrated in FIG. **9**, decorative weaves including those with a different number of wire strands in one of the longitudinal and/or transverse directions can also be utilized in the composite panels of the present invention, yielding a mesh layer **356** having a plurality openings **380** and **382** of different sizes.

[0057] Turning now to FIGS. **4**, **5**A and **5**B, the base layer **58** is shown. The base layer **58** is a substantially planar member having a plurality of apertures or perforations **100**. The apertures **100** are arranged within the base layer **58** in a pattern or configuration that substantially corresponds to the pattern or arrangement of projecting portions **94** on the first surface **60** of the mesh layer **56**. It will at once be appreciated that the apertures **100** are configured in substantially the same arrangement as at least a portion of the projecting portions **96** on the second surface **64** of the mesh layer **56**. Apertures **100** may be of any shape and/or size, provided the apertures **100** are positioned to align with, mate with and/or otherwise cooperate with at least a portion of the projecting portions or the crimps within the mesh layer **56**. The apertures **100** can be laser cut, punched, stamped or formed within the base layer **58** by any means known to those skilled in the art.

[0058] The base layer **58** may be etched, stamped, embossed, colored and/or provided with decorative indicia on one or both of its surfaces **62** and **66** to provide the base layer with different textures, ornamental features and/or to affect the aesthetic impression or visual appearance of the base layer **58**.

[0059] As illustrated in FIGS. **6**, **11** and **12**, the composite panel **50** is assembled by mating the base layer **58** and the mesh layer **56**. In particular, the base layer **58** is aligned with and overlies the mesh layer **56** such that the projecting portions **94** on the first surface **60** of the mesh layer **56** can be viewed through, cooperate with, engage and/or at least partially extend through the apertures **100** in the base layer **58**, as best illustrated in FIGS. **1**A and **12**. Preferably, the base layer **58** and the mesh layer **56** fit together or otherwise engage each other in a manner that minimizes the distance between the two layers and properly positions the mesh layer **56** with respect to the base layer **58**. If the projecting portions **94** extend at least partially through the apertures **100**, the mesh layer **56** is also stabilized in assembled position with respect to the base layer **58**.

[0060] The base layer **58** and the mesh layer **56** can be secured together by welding, adhering, fastening or otherwise permanently joining the layers together. For example, the layers may be secured together using fasteners, such as bolts, brackets, clips, rivets or clamps; or using adhesives, such as silicone, epoxies or any adhesive having the effective bond strength to secure the layers together.

[0061] The panels **56** and **58** may be secured at their points of contact or along one or more of their side edges **68** and **70**, respectively. In alternative embodiments of the present invention, the mesh layer **56** and the base layer **58** may be removably mated and/or pivotally joined to each other (using for example a hinge or pin assembly **69**) along at least of their side edges **68** and **70** respectively, as illustrated in FIG. **29**. As illustrated in FIGS. **1**A, **1**B and FIGS. **26** through **29**, it can be seen that the present invention provides a composite panel **50** wherein each of the first and second façade surfaces **52** and **54** provide the panel with a distinct visual impression. The panel is constructed to have the desired amount of light reflectivity, air diffusion and/or ornamentation, depending on the structural application and desired aesthetic appearance.

[0062] In certain embodiments consistent with the present invention, the base layer and the mesh layer may be aligned as described above and positioned in a slightly spaced apart manner, permitting air or light to pass between the interface of the two layers, yielding a composite panel having yet another distinct visual impression.

[0063] Turning for the moment to FIGS. **13** through **18**, an alternate embodiment of a composite panel **200** is illustrated. In particular, FIG. **13** illustrates a mesh layer **202** comprising a plurality of interwoven transverse and longitudinal wire strands **204** and **206**, respectively. The mesh layer **202** includes a plurality of openings **209**. As illustrated in FIG. **14**, the wire strands **204** and **206** are crimped, providing the woven mesh layer **202** with a plurality of projecting portions **208** and **210** on each of its first and second surfaces **203** and **205**, respectively.

[0064] The base layer **212** for use in the composite panel **200** is illustrated in FIGS. **15** and **16**. The base layer **212** is a substantially planar member comprising a first surface **213** and a second surface **215** and having a plurality of apertures or perforations **214**. The apertures **214** are arranged within the base layer **212** in a pattern or configuration that substantially corresponds to the arrangement of projecting portions **210** on the second surface **205** of the mesh layer **202**.

[0065] As illustrated in FIGS. **17** and **18**, the second surface **205** of the mesh layer **202** overlies the first surface **213** of the base layer **212** allowing the first surface **213** to be visible through the openings **209** in the mesh layer **202**. The projecting portions **210** on the second surface **205** of the mesh layer **202** are substantially aligned with the apertures **214** in the base layer **212**, which permits the projecting portions **208** on the first surface **203** of the mesh layer **202** to be visible through the apertures **214**.

[0066] Preferably, the base layer **212** and the mesh layer **202** fit together or otherwise engage each other in a manner that minimizes the distance between the two layers and properly positions the mesh layer **202** with respect to the base layer **212**. If the projecting portions **210** extend at least partially through the apertures **214**, the mesh layer **202** can also be stabilized in assembled position or otherwise prevented from moving or shifting with respect to the base layer **212**. Once aligned in this manner, the mesh layer **202** and the base layer **212** may be secured together in the manner described with respect with composite panel **50**.

[0067] Referring next to FIGS. **19** through **24**, an alternate composite panel **300** consistent with the present invention is illustrated. A mesh layer **302** comprising a plurality of interwoven transverse and longitudinal wire strands **304** and **306**, respectively and having a plurality of openings **309**. As illustrated in FIG. **20**, the wire strands **304** and **306** are crimped, providing the woven mesh layer **302** with a plurality of projecting portions **308** and **310** on each of its first and second surfaces **303** and **305**, respectively.

[0068] The base layer **312** for use in the composite panel **300** is illustrated in FIGS. **21** and **22**. The base layer **312** has a first surface **313** and a second surface **315** and includes a plurality of "plus" shaped apertures **314**. The apertures **314**

are arranged within the base layer **312** in a pattern or configuration that substantially corresponds to the arrangement of projecting portions **306** on the first surface **303** of the mesh layer **302**.

[0069] As illustrated in FIGS. **23** and **24**, the second surface **315** of the base layer **312** overlies the first surface **303** of the mesh layer **302**, such that projecting portions **308** on the first surface **303** of the mesh layer **302** are substantially aligned with the apertures **314** in the base layer **312**. Accordingly, the projecting portions **308** on the first surface **303** of the mesh layer **302** extend at least partially through and are visible through the apertures **314**. Once aligned in this manner, the mesh layer **302** and the base layer **312** may be secured together in the manner described with respect with composite panels **50** and **200**.

[0070] Turning for the moment to FIG. **25**, an alternate base layer **500** is illustrated. In this embodiment, the base layer **500** comprises a plurality of strips **502**, including slots, punches or perforations **504**. Like the base layers described above, the strips **502** are arranged such that the perforations **504** are substantially aligned with the apertures in the chosen mesh layer. Accordingly, the projecting portions of the mesh layer are visible through and/or otherwise engage the perforations in the strips **502**. Once aligned in this manner, the strips **502** are secured to the mesh layer by any means known to those skilled in the art.

[0071] It will at once be appreciated that the composite panels of the present invention are reversible such that either surface can be used as the exterior or viewer's side of the panel, depending on the application of the composite panel. In applications where the mesh layer is the exterior or visible layer, the projecting portions extending away from the surface of the base layer provide the composite panel with structural depth, as best illustrated in FIGS. **1**A, **1**B and **18**.

[0072] FIG. **26** illustrates an architectural surface or cladding system comprising a plurality of composite panels **50** joined to one another at their respective edges **68** and **70**, with a preferably non-obvious joint **510**. The panels **50** form a continuous, uninterrupted surface, such as a wall **512**. The composite panels may be welded, adhered or fastened together to form the wall **512**. The composite panels **50** may be secured to another planar member such as MDF (medium density fiberboard), wood or metal surfaces before installation to the wall, or alternatively, the composite panels can be secured directly to stud backup, masonry, or other common substrates.

[0073] Each of the composite panels utilized in a given wall, ceiling or cladding system need not be the same composite panel and can be constructed of mesh and base layers of different constructions, materials, colors, textures, shapes and the like based on design choice and desired aesthetic characteristics to form a pattern or ornamental design on the surface.

[0074] FIG. **27** illustrates a railing **600** comprising a plurality of composite panels **50** joined to one another with a preferably non-obvious joint **610**. The panels **50** form a continuous, uninterrupted barrier member **612** which is secured into a frame **614**. Because the barrier member **612** is secured at the perimeter thereof, both sides of the railing **600** are visible or exposed within the construction.

[0075] FIG. **28** illustrates a column cover **700** comprising a large composite panel **50** constructed in accordance with the present invention. The composite panel is constructed by individually forming each of the mesh and base layers to the desired radius of curvature to cover the column **700**, or alternatively, depending on the particular materials utilized, the composite panel or series of panels may be formed to the desired radius after assembly of the mesh and base layers.

[0076] It should be noted that the mesh layer, base layer, composite panels and/or composite systems of the present invention may be constructed from any of a wide variety of materials that provide sufficient strength or durability for a given architectural application and/or selected for desired aesthetic characteristics. Each of the base and mesh layers may be of the same or disparate materials, and each composite panel in a given composite system need not be uniformly constructed of the same materials. The materials preferably include any of a wide variety of metal materials, such as steel, aluminum and aluminum alloys, copper and copper alloys, nickel and nickel alloys, silver, titanium or any suitable wire material and combinations thereof, with any type of color, coating, enamel, varnish, finish or treatment (such as galvanizing, polishing or anodizing). Such materials can also include wood, moldable plastic materials (such as high-impact plastic, nylon, polyester, polypropylene, polyvinylchloride), glass, fiberglass, Lexan®, polycarbonates, acrylics and/or combinations thereof. The mesh layer, the base layer or both may be further embossed, stamped, etched, painted, coated or otherwise treated to achieve a specific visual impression or for specific environmental requirements.

[0077] It should also be noted that the composite panels and systems of the present invention may be used in association any type of decorative or architectural projects, such as for ventilation, screens, privacy, sun shades, infill panels, grilles, security, ceiling panels, shelving, shower enclosures, windows, furniture, light fixtures and the like, and are not limited to one particular size or shape of composite panel, or composite panel system. Accordingly, all such modifications are intended to be included within the scope of the present inventions. Other substitutions, modifications, changes and omissions may be made in the design, operating conditions and arrangement of the preferred and other exemplary embodiments without departing from the spirit of the present inventions.

What is claimed is:

1. A composite building panel comprising:

a mesh layer having first and second surfaces and comprising a plurality of woven strands, each of the first and second surfaces including a pattern of outwardly extending projections; and

a base layer aligned with and overlying the mesh layer, the base layer including a plurality of apertures formed therein arranged in substantially the same pattern as the outwardly extending projections on the first surface of the mesh layer such that at least a portion of the projections on the first surface of the mesh layer are visible through the apertures.

2. The composite panel of claim **1**, wherein the mesh layer comprises a plurality of interwoven wire strands, wherein the wire strands are constructed of a metal material selected from steel, aluminum and aluminum alloys, copper and copper alloys, nickel and nickel alloys, silver, titanium or any suitable wire material and combinations thereof.

3. The composite panel of claim **1**, wherein the mesh layer is constructed of a material selected from wood, plastic, glass, fiberglass, polycarbonates, acrylics and combinations thereof.

4. The composite panel of claim **1**, wherein the base layer is constructed of a metal material selected from steel, aluminum and aluminum alloys, copper and copper alloys, nickel and nickel alloys, silver, titanium or any suitable wire material and combinations thereof.

5. The composite panel of claim **1**, wherein the base layer is constructed of a material selected from wood, plastic, glass, fiberglass, polycarbonates, acrylics and combinations thereof.

6. The composite panel of claim **1**, wherein the base layer has a first and a second surface and wherein at least one of the first and second surfaces is etched, stamped, embossed, anodized, painted, coated or a combination thereof.

7. The composite panel of claim **1**, wherein the mesh layer and the base layer are secured together by at least one of adhesives, welds and fasteners.

8. The composite panel of claim **1**, wherein each of the base layer and the mesh layer has a side edge, and wherein the side edge of the base layer is in pivotal engagement with the side edge of the mesh layer.

9. The composite panel of claim **1**, wherein each of the base layer and the mesh layer are provided with a radius of curvature to provide the composite panel with an arcuate surface.

10. A composite panel comprising:

a mesh layer comprising a plurality of interwoven wire strands, each of the interwoven wire strands having a length provided with a plurality of crimps; and

a substantially planar member positioned close adjacent to the mesh layer and secured thereto, wherein the planar member includes apertures formed therein configured such that a least a portion the crimped wire strands are visible through the apertures in the planar member.

11. The composite panel of claim **10**, wherein the mesh layer is preferably a metallic mesh material.

12. The composite panel of claim **10**, wherein the planar member is a metallic sheet.

13. The composite panel of claim **10**, wherein the planar member comprises first and second surfaces and wherein the planar member is at least one of embossed, etched and stamped to provide decorative indicia on at least one of its first and second surfaces.

14. The composite panel of claim **10**, wherein the mesh layer and the planar member are contiguously secured together by at least one of welds, fasteners and adhesives.

15. An architectural surface system comprising:

a plurality of composite panels joined contiguously together at the respective edges thereof, wherein each of the composite panels comprises a metallic mesh layer provided with a pattern of crimps and a base layer having a plurality of apertures formed therein, wherein the mesh layer is secured adjacent to the base layer such that at least a portion of the crimps within the mesh layer are visible through the apertures in the base layer.

16. The architectural surface system of claim **15**, wherein at least a portion of the crimps extend at least partially through the apertures in the base layer.

17. The architectural surface system of claim **15**, wherein at least a portion of the composite panels comprise a first metallic mesh layer and wherein at least a portion of the composite panels comprise a second metallic mesh layer.

18. The architectural surface system of claim **15**, wherein at least a portion of the composite panels comprise a first base layer and wherein at least a portion of the composite panels comprise a second base layer.

* * * * *