Aug. 22, 1961 G. E. HAMILTON 2,996,812

TACHISTOSCOPE

Filed April 4, 1960 2 Sheets-Sheet 1

Fig. 1.

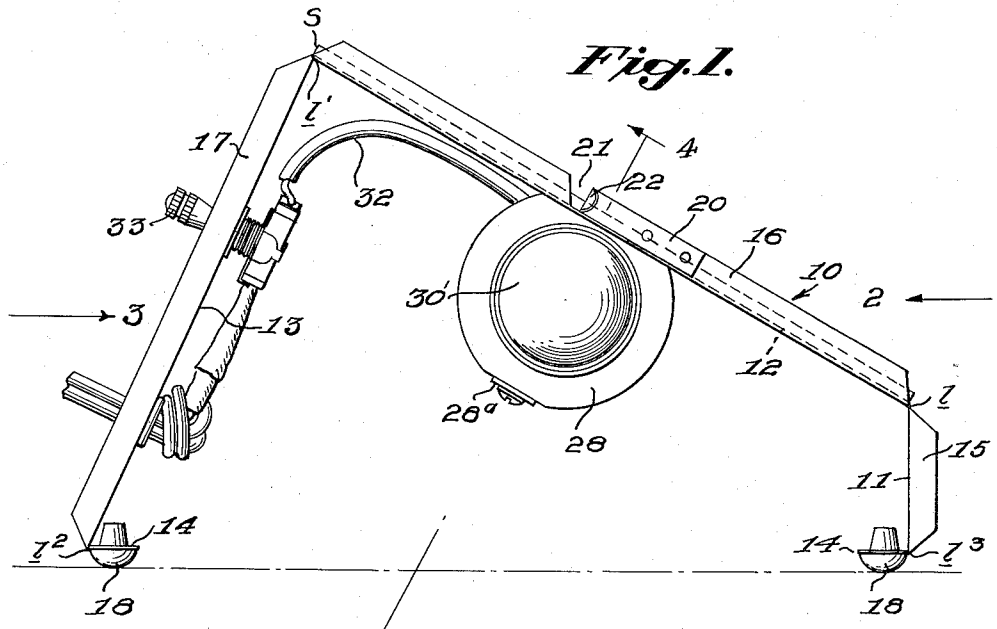

Fig. 2.

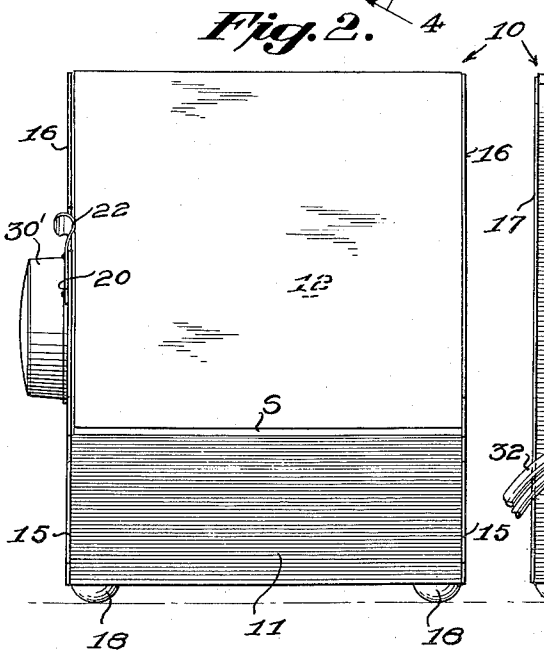

Fig. 3.

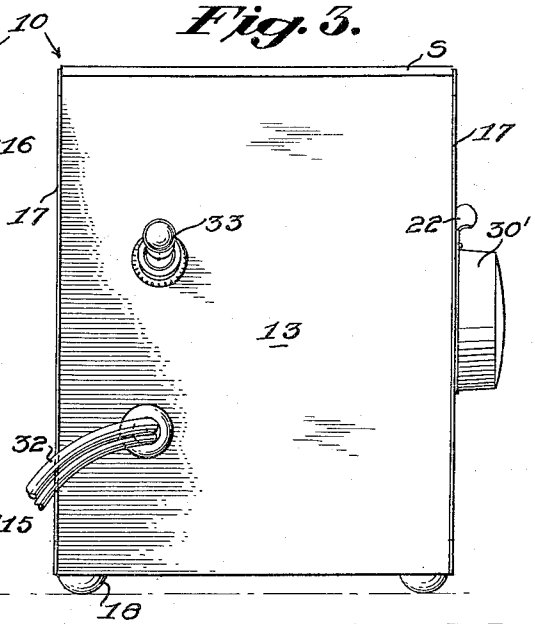

INVENTOR
George E. Hamilton
By Vernon A. Dorsey
ATTORNEY

Aug. 22, 1961 G. E. HAMILTON 2,996,812

TACHISTOSCOPE

Filed April 4, 1960 2 Sheets-Sheet 2

Fig. 4.

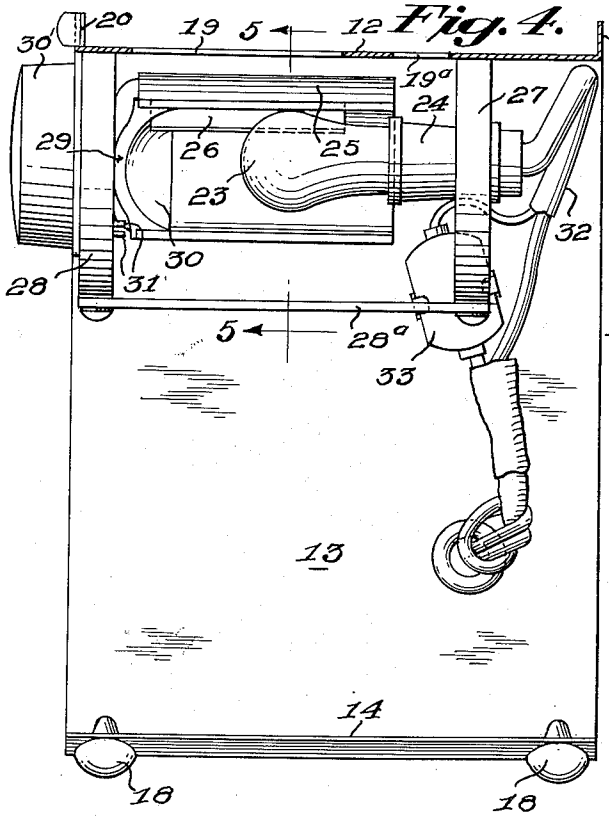

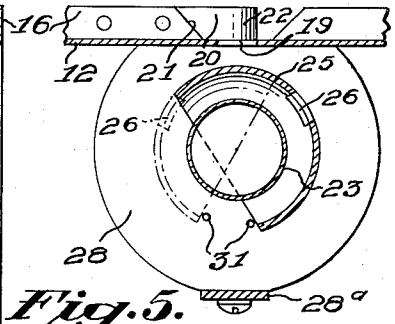

Fig. 5.

Fig. 7.

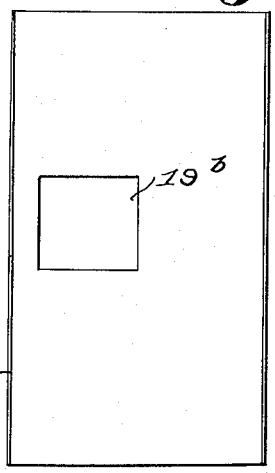

Fig. 6.

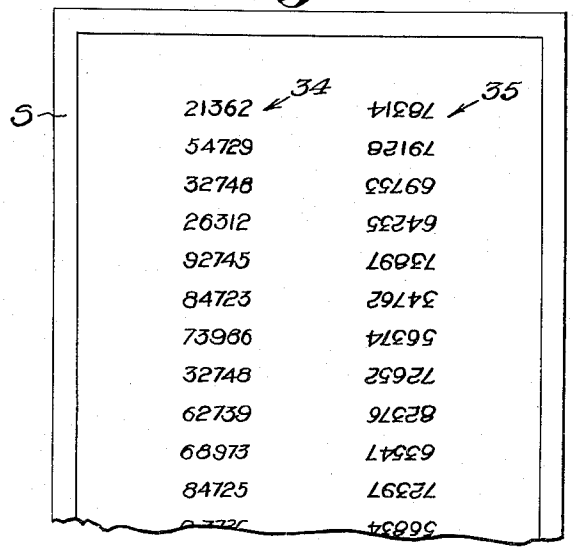

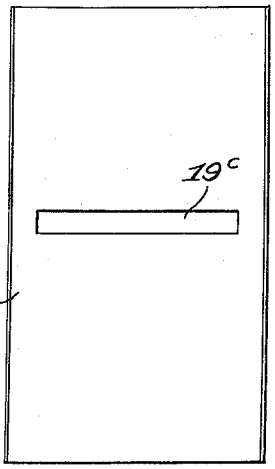

Fig. 8.

INVENTOR
George E. Hamilton
By Vernon A. Long
ATTORNEY

United States Patent Office 2,996,812 Patented Aug. 22, 1961

2,996,812

TACHISTOSCOPE

George E. Hamilton, Meadville, Pa., assignor to Keystone View Company, Meadville, Pa., a corporation of Pennsylvania

Filed Apr. 4, 1960, Ser. No. 19,688
7 Claims. (Cl. 35—35)

This invention relates to a tachistoscope.

The invention is more particularly concerned with a device adapted to improve a person's speed in reading and in recognizing objects.

A primary object of the invention is to provide a tachistoscope which is capable of being used by an individual with ease and comfort.

A further object of the invention is to provide a tachistoscope which is relatively simple in construction, easy and simple to operate, and which is capable of manufacture at relatively low cost.

A still further object of the invention is to provide a tachistoscope structure which is capable of ready adaptation to the reading of words, numbers and the like and to the viewing of various forms of objects with relative small change in the structure.

Other objects and advantages of the invention will become apparent in the course of the following detailed description, taken in connection with the accompanying drawings, wherein—

FIG. 1 is a side elevational view of the improved device in accordance with a preferred structural embodiment thereof.

FIG. 2 is an end elevational view of the device as observed in the direction of the arrow 2 on FIG. 1.

FIG. 3 is an end elevational view of the device as observed in the direction of the arrow 3 on FIG. 1.

FIG. 4 is a transverse vertical sectional view as observed in the plane of line 4—4 on FIG. 1 and which is on a larger scale than FIGS. 1 to 3 and of substantially full size scale.

FIG. 5 is a fragmental vertical sectional view as observed in the plane of line 5—5 on FIG. 4.

FIG. 6 is a fragmental plan view of one embodiment of a slide plate having indicia thereon adapted to be successively illuminated by means involved in the structure.

FIG. 7 is a top plan view, on a reduced scale, of one form of mask embodied in the structure, and

FIG. 8 is a similar view of another form of mask.

Referring now in detail to the drawings, the improved device will be seen to comprise a support **10** which is preferably formed from a single elongated generally rectangular sheet of relatively thin material which is preferably metal but is not limited thereto.

The said elongated sheet is bent on transverse parallel lines l, l^1, l^2 and l^3, as is shown in FIG. 1 with the provision of a rectangular vertical front wall **11**, and inclined top wall **12**, an inclined rear wall **13** and a relatively narrow transversely extending foot member **14** at each end of the support.

Furthermore, the sheet of material is bent at its opposite side edges in the provision of vertical flanges **15**, **16** and **17** which are disposed on opposite side edges of the walls **11**, **12** and **13** respectively.

The foot portions **14** are apertured for the reception of tapered shanks of rubber members **18** having generally semi-spherical heads which are engageable with any horizontal support, as indicated by the dot-and-dash line in FIG. 1.

From the above, it should be apparent that the support comprises a front vertical wall **11** of relatively small vertical dimensions, a second wall **12** of the same width as wall **11** but of substantially greater length and which

is inclined upwardly from the upper edge of wall **11** and that the third wall **13** which is inclined downwardly and outwardly from the rear edge of the wall **12**.

The wall **12** provides a mask upon which is slidably disposed a slide S later referred to in more detail.

As is shown in FIGS. 4 and 5, the wall or mask **12** is provided with an elongated transverse slot **19** for intermittent passage of light for illumination of a corresponding area of a slide S and on which area may be letters, figures, or numerals as is shown in FIG. 6.

The slide S is longitudinally movable on the wall or mask **12** and in order to retain the slide in any given position on the mask for alignment of letters, figures or numerals thereon with a slot or slots in the mask, the slide is preferably frictionally engaged with the mask and which is preferably effected by means of a leaf spring **20** secured to one of the flanges **16** and whose free end is biased inwardly of a gap **21** in the flange and with the free end being inwardly convex as at **22** for frictional contact with the adjacent edge of the slide S.

Means are provided for intermittently illuminating the slide S through the slot **19** whereby legends on the slide within the area of the slot are rendered visible to a reader facing the slide from above same.

Such means comprises a lamp **23** which is removably supported in a socket **24**. Disposed concentrically of the lamp **23** is a shield **25** which, as is indicated in FIGS. 4 and 5, is in the form of more than a half cylinder and which is provided with a slot **26** which is adapted for intermittent alignment with the slot **19** in the mask **12** whereby the slide S is illuminated upon alignment of the slots **19** and **26**.

The lamp socket **24** is mounted in a disk-like member **27** which is secured to and depends from the mask **12** adjacent one side of the support.

A second disk-like member **28** is secured to and depends from the wall or mask **12** adjacent the opposite side of the support and which is transversely aligned with member **27** and the members **27** and **28** are interconnected at their lower edges by means of a flat bar **28a**.

The shield **25** has an end portion **29** having an inner concave wall **30** and the end portion **29** is rotatably supported in member **28** for rotation of the shield **25** concentric to the lamp **23** and a finger engageable knob **30'** is disposed externally of the member **28** and is connected with the shield end portion **29** for manipulating of the shield **25** about its axis.

As is indicated in FIGS. 4 and 5, a pair of stop pins **31** project inwardly from member **28** and which are selectively engageable by the shield **25** for limiting same to its opposite extreme swinging positions wherein slots **19** and **26** are misaligned and under which circumstances the slide S is not illuminated.

The slot **26** in shield **25** is brought into alignment with slot **19** upon partial rotation of the shield **25** through action of the knob **30'**.

An electric cable **32** extends through the wall **13** and is provided with a switch **33** whereby the device may be rendered operative and inoperative without removing the cable from a plug in the wall.

The slide S, partially illustrated in FIG. 6, is provided with two columns of numbers **34** and **35**, either of which columns will align with slot **19** upon proper positioning of the slide on the wall or mask **12**.

The two rows of numbers provide for use of either row thereby reducing the number of slides required.

Furthermore, the mask **12** may be provided with a second relatively short slot **19a** whereby upon viewing the consecutive numbers of either row thereof, the corresponding laterally aligned numbers of the other row

partially visible through slot 19[a] will act as indexing means for complete illumination of the numbers visible through the slot 19.

The mask 12 may be provided with various forms and arrangement of slots or openings for illumination of various figures or designs on the slides.

As shown, for example, in FIG. 7, the mask 12[a] may be provided with a relatively large square slot 19[b] while according to FIG. 8, the mask 12[b] is provided with a rectangular slot 19c extending substantially throughout the width thereof. In the instances of such masks, the corresponding slides would be provided with figures of corresponding dimensions.

The purpose of the structure is to improve a person's speed in reading and in recognizing objects and accordingly in the use of the present invention, the slide S is brought to a position with a number, word or words thereon into alignment with the slot 19, whereupon the knob 30' is turned in one direction or the other to bring slot 26 in the shield 25 into alignment with the slot 19, whereupon the slide is illuminated in the area of slot 19 with clear visibility of the matter on the slide which overlies the slot 19, or the slots 19 and 26 may first be aligned and the slide moved until matter thereon is clearly visible.

Upon observing FIG. 5, it will be apparent that shield 25 need be turned a short angular distance to bring the slots 19 and 26 into alignment and since the slot 26 is movable to either side of slot 19, there is no idle movement in the shield.

The purpose of the device is, of course, to find how quickly one can recognize the word, number or design opposing the slot 19 whereby a user will soon improve his speed in reading or recognizing objects.

While the device does not embody actual timing means, it is to be observed that quick contact of the shield 25 with the limiting pins 31 will produce distinct sounds which will readily enable a user of the device to determine advanced skill in his or her reading of the illuminated matter appearing on the slide.

Having set forth the invention in accordance with a preferred structural embodiment thereof, what is claimed and desired by U.S. Letters Patent is:

1. A manually operable tachistoscope comprising a support including a front vertical wall, a rear wall of greater vertical extent than said front wall and being inclined toward same, a top wall inclined upwardly from the upper edge of said front wall to the upper edge of said rear wall, all of said walls being formed of a single piece of material, an opening in said top wall intermediate said front and rear walls, a light source disposed beneath said top wall and beneath said opening, an indicia bearing slide movably supported on said top wall for alignment of certain indicia with said opening for illumination thereof by said light source, and finger operable means supported by said top wall for normally intercepting light from said light source to said slide through said opening and for intermittently illuminating said slide through said opening.

2. The structure according to claim 1, wherein said light source comprises an elongated electric light bulb disposed beneath said top wall parallel therewith, and said light intercepting means comprising a shield in the form of more than half a cylinder supported for rotation relative to said light bulb, said shield normally intercepting light from said bulb to said opening in said top wall and intermittently admitting light to the opening upon partial rotation thereof.

3. The structure according to claim 2, together with a pair of disk-like members secured to and depending from said top wall, one of said members supporting said light bulb and the other of said members rotatably supporting said shield.

4. The structure according to claim 3, wherein said disk-like members are interconnected at their lower edges by means of a flat bar.

5. A manually operable tachistoscope comprising a support including a wall disposed at an angle to the horizontal and including a transverse slotted portion, a slide movably disposed on said wall and bearing at least two columns of printed matter with the lines thereof in the two columns being transversely aligned, a light source disposed beneath said wall, finger operable means disposed beneath said wall for normally intercepting light from said source to said slide and through said slotted portion, and for intermittently illuminating through said slotted portion successive lines on said slide upon increment movement thereof on said support, and said slotted portion extending beyond one column of printed matter for partially illuminating corresponding reversed lines of printed matter in the other column, thereby providing indexing means for complete illumination of the successive lines.

6. The structure according to claim 5, in which the columns of printed matter on the slide are in reverse order.

7. A manually operable tachistoscope comprising a body or support including a front vertical wall or mask having an opening therein, a light source disposed beneath said opening in said wall or mask, rotatable light intercepting means spaced between the opening in said wall or mask and over said light source, said light intercepting means being in the form of a half cylinder the concave portion of the cylinder facing the light source, said half cylinder having an opening therein of the shape of said opening in said wall or mask, with means to rotate the light intercepting means to align said opening therein with the opening in the front wall of the tachistoscope.

References Cited in the file of this patent

UNITED STATES PATENTS

2,188,210	Smith	Jan. 23, 1940
2,535,243	Taylor	Dec. 26, 1950
2,723,466	Ott	Nov. 15, 1955
2,758,393	Levy	Aug. 14, 1956
2,791,843	Warren	May 14, 1957
2,840,925	Dunson	July 1, 1958

FOREIGN PATENTS

421,099	Great Britain	Dec. 13, 1934