(No Model.) 3 Sheets—Sheet 1.

J. F. ELDER.

STOCK CAR.

No. 456,697. Patented July 28, 1891.

FIG. 2.

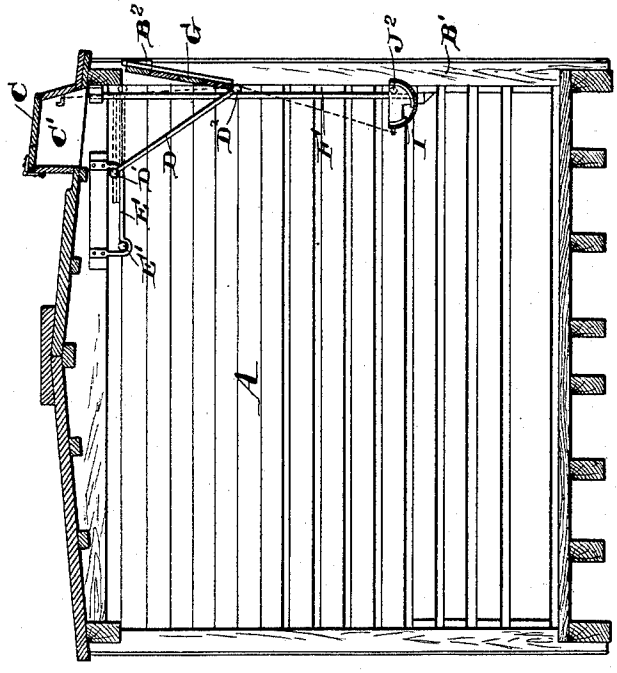

FIG. 1.

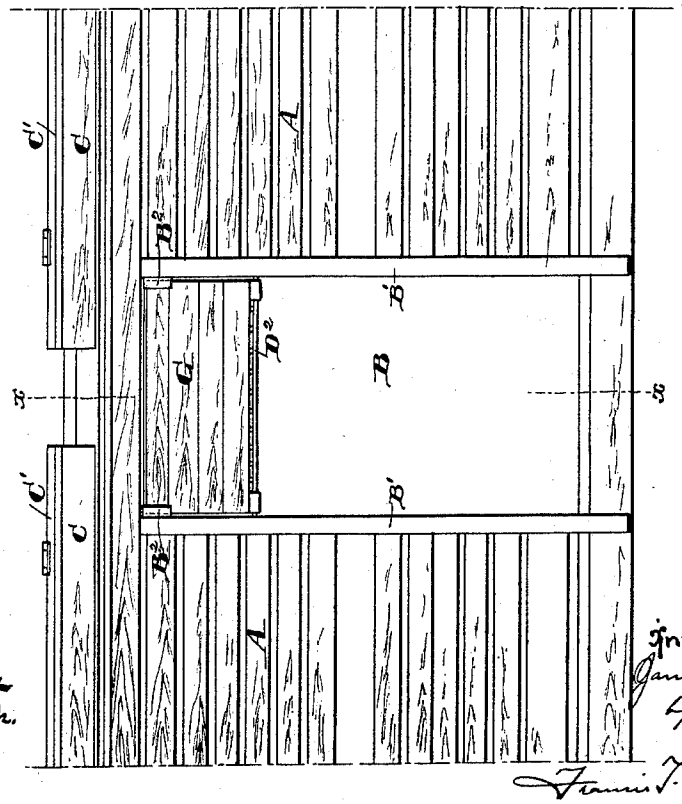

Witnesses:
Henry Bruce
Joshua Stallcup, Jr.

Inventor:
James F. Elder
by his atty.
Francis T. Chambers

THE NORRIS PETERS CO., PHOTO-LITHO., WASHINGTON, D. C.

(No Model.) 3 Sheets—Sheet 2.

J. F. ELDER.

STOCK CAR.

No. 456,697. Patented July 28, 1891.

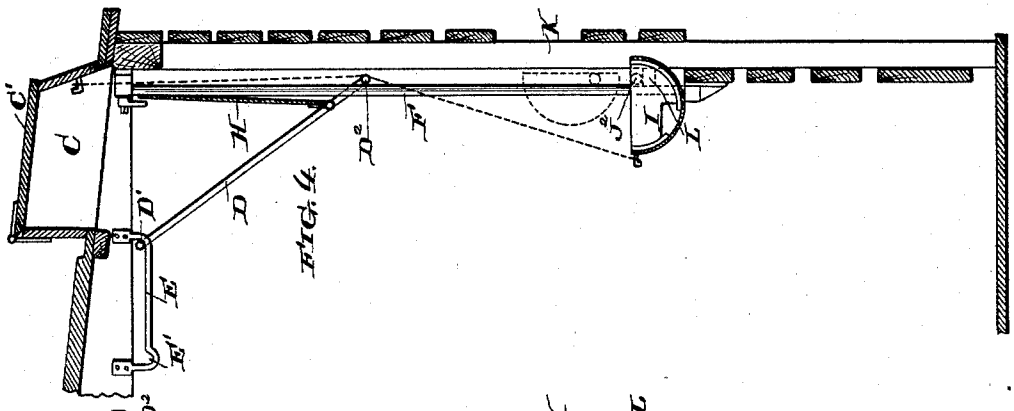

FIG. 4.

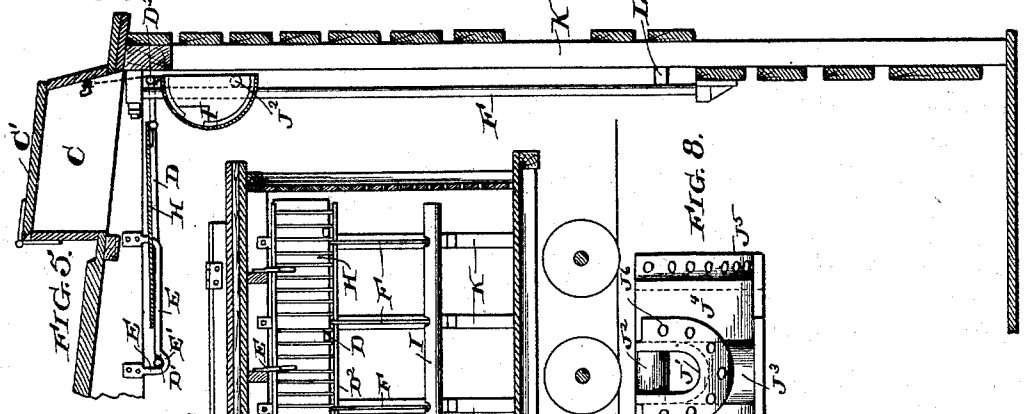

FIG. 5.

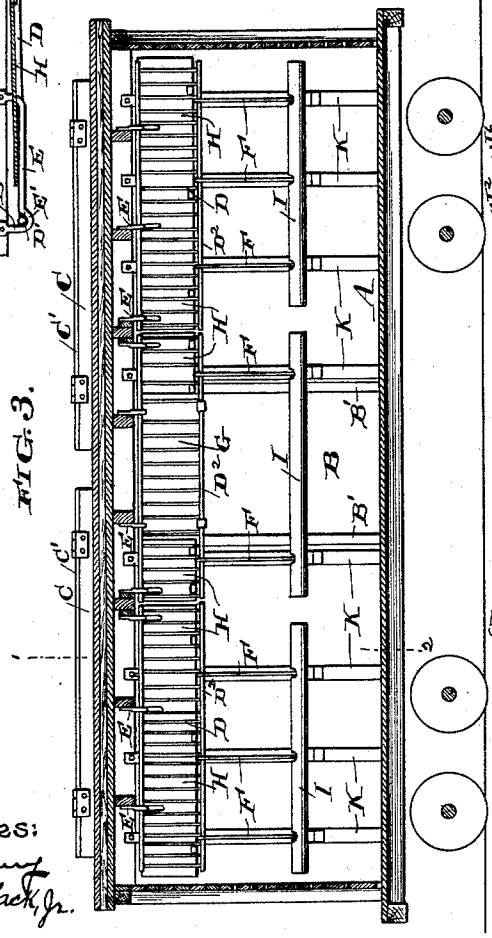

FIG. 3.

FIG. 8.

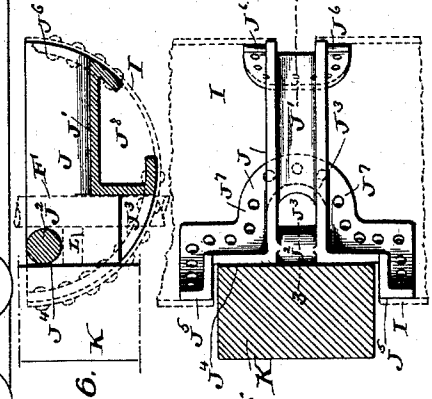

FIG. 7.

FIG. 6.

Witnesses:
Henry Tenny
Joshua B. Mallack, Jr.

Inventor:
James F. Elder
by his atty
Francis T. Chamberlain

THE NORRIS PETERS CO., PHOTO-LITHO., WASHINGTON, D. C.

(No Model.) 3 Sheets—Sheet 3.

J. F. ELDER.

STOCK CAR.

No. 456,697. Patented July 28, 1891.

FIG. 9.

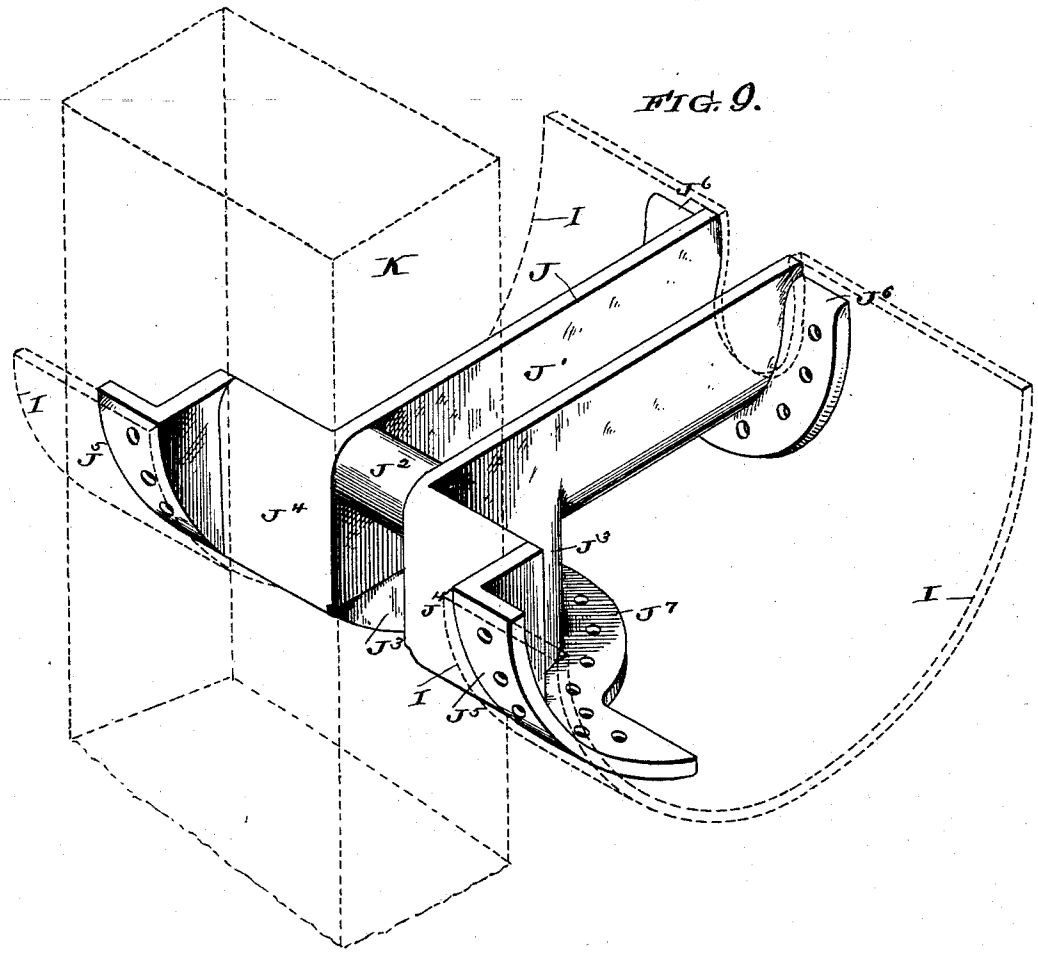

Witnesses:
Joshua Mathack, Jr.

Inventor:
James F. Elder
by his atty
Francis J. Chambers

THE NORRIS PETERS CO., PHOTO-LITHO., WASHINGTON, D. C.

UNITED STATES PATENT OFFICE.

JAMES F. ELDER, OF PHILADELPHIA, PENNSYLVANIA.

STOCK-CAR.

SPECIFICATION forming part of Letters Patent No. 456,697, dated July 28, 1891.

Application filed February 25, 1891. Serial No. 382,718. (No model.)

To all whom it may concern:

Be it known that I, JAMES F. ELDER, of the city and county of Philadelphia, State of Pennsylvania, have invented a certain new and useful Improvement in Stock-Cars, of which the following is a true and exact description, reference being had to the accompanying drawings, forming part of this specification.

My invention relates to the construction and fitting up of stock-cars, and may be considered, to a certain degree at least, as an improvement upon my former patent, dated March 12, 1889, and No. 399,605.

The object of my present invention is to generally improve the construction and mode of operation of the devices for feeding and watering cattle. The nature of the improvements will be best understood as described in connection with the drawings, in which they are illustrated, and in which—

Figure 1 is a side elevation of a portion of a car, showing the door thereof. Fig. 2 is a cross-sectional view taken through the center of the door-passage. Fig. 3 is a sectional side elevation of the inside of a car provided with my improvements; Fig. 4, a cross-sectional view taken on the line 1 2 of Fig. 3, showing the hay-rack and watering-trough in operative position; Fig. 5, a similar view showing the hay-rack and watering-trough drawn up out of the way; Fig. 6, a side elevation of the trough-bracket; Fig. 7, a plan view thereof, and Fig. 8 an end view of the same device. Fig. 9 is a perspective view of the same device, showing a portion of the trough and one of the vertical timbers in dotted lines.

A indicates the car, having the usual slatted sides of a stock-car.

B is the doorway.

C represents the boxes at the top of the car, having lids C′, through which hay is introduced to the inside of the car.

D indicates the hay-racks, being made up of a light frame-work consisting of parallel rods secured at top and bottom to transverse bars D′ and D^2. The upper bar D′ rides upon two or more brackets E, secured to the top of the car and having, preferably, at their inner ends recesses or depressions E′, which serve to engage and hold the bars D′ when they are pushed into them. The other bar D^2 is engaged by a series of upright guide-rods F, the motion of this bar being vertical, or substantially so, while the motion of the bar D′ is substantially horizontal. This arrangement permits the frame D to be lowered to the position shown in Fig. 4 and filled with hay through the boxes C or to be pushed up out of the way, as shown in Fig. 5.

In the features above described my apparatus does not differ substantially from that described in my former patent. As heretofore constructed, however, stock-cars having hay-racks of the kind indicated have generally had that portion of their sides which comes opposite to the rack when lowered to the position shown in Fig. 4 made solid instead of the slatted construction shown. This is done for the reason that sparks would be liable to enter between the slats and set fire to the hay in the rack. As heretofore constructed, also, the hay-racks have not extended across the door of the car, or if extended across the door of the car were liable to let the hay fall from them when the door was opened. It is desirable, of course, that the rack should be filled from end to end of the car, and it is also desirable that the slatted construction of an ordinary stock-car should be used in the whole side to insure a plentiful supply of air for cattle, and more especially when the car is arranged to carry sheep or pigs, a vertical division being made by a second or false floor placed about the center of the car-body.

I have provided against the loss of hay through the opening of the door by hinging a flap G, Figs. 1 and 2, to the bar D^2 of the hay-rack, this flap being placed opposite to the door and of substantially the same breadth, and stops, as B^2, being provided to hold it in the position shown in Figs. 1 and 2. When not in use, the flap G is folded down upon the rack G and pushed up with it, as indicated in dotted lines in Fig. 2.

To prevent the entrance of sparks through the slatted upper sides of the car to the hay in the racks, I use a similar device—that is, I hinge to the lower part of the rack flaps H, which may be conveniently made of sheet metal, and which extend up above the slatted sides and form the outside of the hay-rack

when in the position shown in Fig. 4. These flaps of course prevent the entrance of sparks to the hay, and like the flaps G they fold down upon the rack D and are pushed up out of the way, as shown in Fig. 5.

Referring again to the drawings, I I indicate water-troughs, which, when in operative position, extend out from the sides of the car, as shown in Fig. 4. When not in use, they are folded up against the sides of the car, as indicated in dotted lines on Fig. 4, and preferably drawn up to the top of the car, as shown in Fig. 5.

The novel feature of my present construction, so far as it relates to the water-trough, consists in the use of a new bracket, to which the sheet metal of the trough is secured, and the combination of this bracket with the guide-rods F and the vertical timbers of the car-framing. The bracket J is shown in detail in Figs. 6, 7, and 8. It is provided with two grooves J′ and J^3, placed substantially at right angles to each other and adapted to embrace a guide-rod F. A bearing-pin J^2 extends across the grooves at the outer angle formed by their intersection and serves to engage the rod F. Inside of the grooves J′ and J^3 a transverse opening or passage J^8 is formed in the bracket, by which the sections of the trough I on each side of the bracket communicate together, the sheet metal of the trough being riveted or otherwise secured to the bracket on the flanges J^6 and J^7 thereof and not extending across the grooves. Preferably a broad groove J^4, running parallel to the groove J^3, is formed beyond it and the pin J^2, the breadth of this groove J^4 being such as will embrace one of the vertical timbers K of the car-framing, and the guide-rod F being with this construction of the bracket placed directly in front of the vertical timbers K.

L is a stop placed near the bottom of the guide-rods F, and upon which the bearing-pin J^2 rests when the trough is in operative position. In this position the outer edge of the trough extends outside of the inner faces of the timbers K, said timbers being embraced by the grooves J^4 of the brackets, the guide-rods extending inside of the pins J^2 and lying along the grooves J^3. When drawn up to the position shown in dotted lines in Fig. 4, or that shown in Fig. 5, the guide-rods F lie along the grooves J′, the open faces of the troughs being in contact or nearly in contact with the vertical timbers K.

It will be readily seen that by the described construction I can use a comparatively large trough, which, both in use and when not in use, will occupy the least possible space in the car.

Having now described my invention, what I claim as new, and desire to secure by Letters Patent, is—

1. A stock-car having, in combination with adjustable hay-racks, flaps hinged to the lower part of said racks and to extend up against the side of the car or to lie against the rack, all substantially as and for the purpose specified.

2. A stock-car having upright guide-rods F along its side or sides, in combination with brackets J, having recesses J′ J^3 at substantially right angles to each other, having also a bearing-pin J^2, arranged at the angle of the recesses to engage a rod F, and a transverse opening J^8, and a trough secured to the curved face of the brackets, all substantially as and for the purpose specified.

3. A stock-car having upright frame-struts K and guide-rods F secured in front thereof, in combination with brackets J, having recesses J′ J^3 at substantially right angles to each other to receive the guide-rod, a broader recess J^4, parallel with and outside of recess J^3, to receive the frame-strut, a pin J^2 at the angle of grooves J′ J^3 to engage the guide-rod, a transverse passage J^8, and a trough secured to the curved face of the brackets, substantially as and for the purpose specified.

4. The stock-car-trough bracket having grooves J′ J^3 to receive a guide-rod, a pin J^2 to engage said rod, a broad groove J^4 outside of groove J^3 to embrace a frame-timber, and a transverse passage J^8, all substantially as and for the purpose specified.

J. F. ELDER.

Witnesses:
LEWIS R. DICK,
JOSHUA MATLACK, Jr.