June 25, 1946. W. A. INGALLS 2,402,816

STOP MOTION DEVICE

Filed Sept. 13, 1945

Fig. 1.

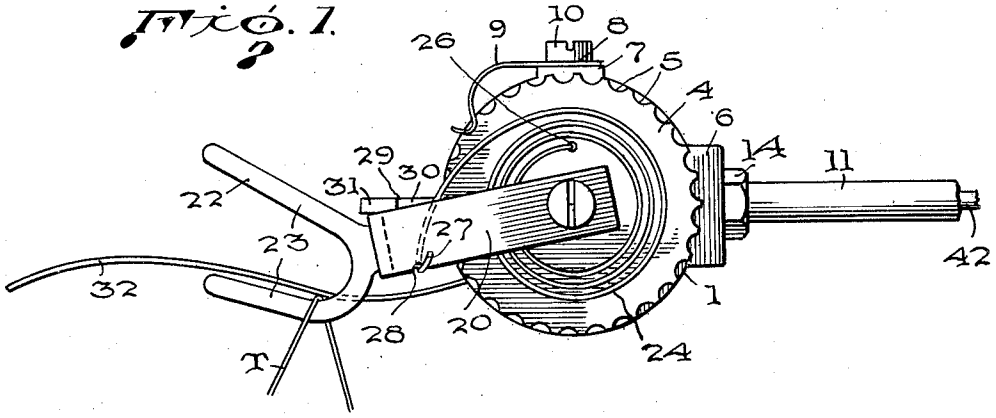


Fig. 2.

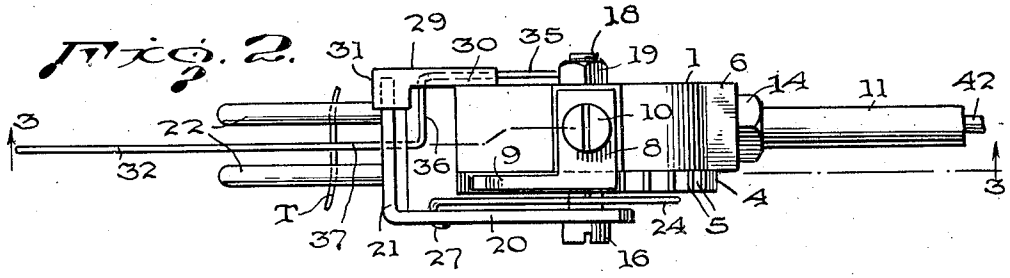


Fig. 3.

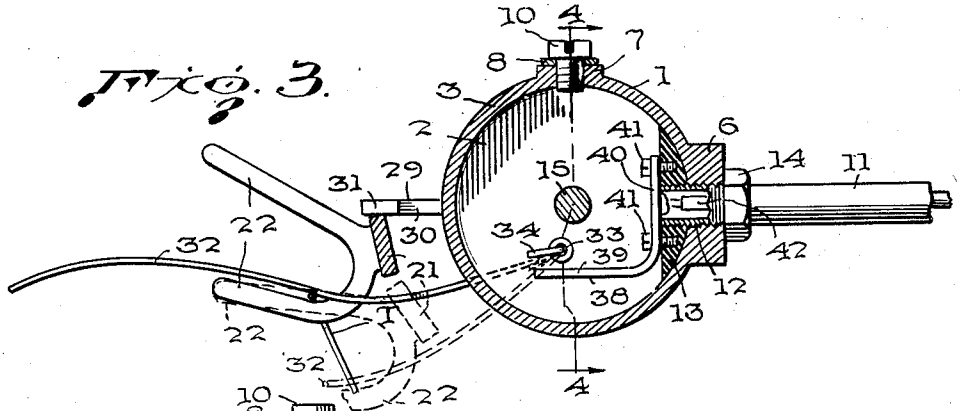


Fig. 4.

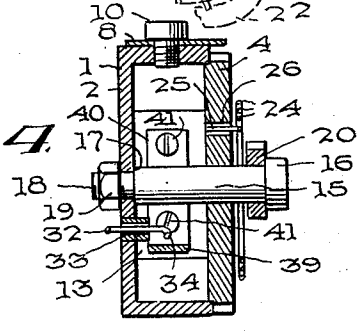


Inventor

W. A. Ingalls

By Cobb & Cobb

Attorneys.

Patented June 25, 1946 2,402,816

# UNITED STATES PATENT OFFICE

2,402,816

## STOP MOTION DEVICE

Willis A. Ingalls, Syracuse, N. Y., assignor to Tompkins Bros. Co., Syracuse, N. Y., a corporation of New York

Application September 13, 1945, Serial No. 615,986

10 Claims. (Cl. 66—163)

1

This invention relates to stop motion devices, and more especially, to an improved stop motion device for knitting machines.

The primary object of the invention is to provide a simple, compact, sturdy and efficient stop motion device which is so constructed and arranged that it will normally hold the thread in proper position to be freely fed to the knitting instrumentalities of the knitting machine, and which will be controlled by the thread to automatically interrupt operation of the machine, such as when the thread breaks or runs out, or when the tension in the thread exceeds a predetermined amount.

A further object of the invention is to provide an improved stop motion device which may be quickly and easily adjusted to operate pursuant to different tensions in the thread, but which will allow the knitting machine to normally continue to operate until the tension setting is exceeded.

My new stop motion has the further advantages of being constructed of few parts which can be easily assembled and will not readily get out of order, which are subject to a minimum wear, and which can be largely made up of die castings and simple metal stampings, although it is to be understood that it is not limited to such construction.

Other and further objects and advantages of the invention will be hereinafter described and the novel features thereof defined by the appended claims.

In the drawing:

Figure 1 is a view in side elevation of a stop motion device constructed in accordance with the present invention;

Figure 2 is a top plan view of the device;

Figure 3 is a sectional view taken on the line 3—3 of Figure 2, and particularly illustrating the details of the interior construction and assembly of the device; and

Figure 4 is a sectional view taken on the line 4—4 of Figure 3.

Like reference characters designate corresponding parts in the several figures of the drawing, wherein 1 generally denotes a casing which is more or less cup-shaped in form and circular in configuration, the casing proper being composed of a side wall 2 and a laterally extended marginal wall 3. The side of the casing opposite to the side wall 2 is normally closed by a removable disc or cover 4 having its peripheral edge serrated or notched, as at 5, for reasons which will hereinafter more fully appear.

The marginal wall 3 of the casing 1 is increased in thickness at 6 and 7 to form bosses through which suitable openings are made, one of these openings being screw-threaded. In the case of the boss 7, the outer face thereof is flat and on this face is seated the butt 8 of a leaf spring arm 9 having its free end normally engaged with the notches 5 in the edge of the cover 4. A screw 10 extending through the butt 8 of the spring 9 and into the threaded opening in the boss 7 serves to attach the spring to the casing.

2

The other boss 6 is also flat on its outer face, and this boss is likewise provided with an opening therethrough extending to the interior of the casing 1. A hollow supporting arm or tube 11 having threads on one end, as at 12, extends through the opening in the boss 6, and the threaded end of the arm 11 is screwed into a block of insulating material designated 13, such as hard fiber or the like. A jamb nut 14 on the arm 11 and engaged with the threads 12 on the end of the arm is preferably provided to firmly secure the arm 11 to the casing 1 and to draw up the insulating block 13 against the inner face of the marginal wall of the casing, this jamb nut seating against the flat face of the boss 6 at the outer side thereof. The length of the supporting arm 11 may be varied to suit the conditions for any particular machine to which the stop motion device is to be applied. Typical examples of these knitting machines are illustrated in my prior patents, No. 2,329,618, dated September 14, 1943, and No. 2,329,617, also dated September 14, 1943. The machine of the latter patent is of a type in which the knitted fabric is taken up below the needle cylinder, and the thread bobbins are supported above the needle cylinder in the usual manner, and in such a case, the stop motion devices are preferably arranged above the thread bobbins and their supporting arms 11 will be extended radially from a central support located on the central axis of the needle cylinder. In the other case, as illustrated in my Patent No. 2,329,618, above referred to, the knitted fabric is taken up above the needle cylinder, and hence the thread bobbins are located below the needle cylinder. Accordingly, the stop motion devices will be located between the thread bobbins and the needle cylinder, and each stop motion device would be preferably shifted through an angle of substantially 90° to dispose the supporting arm 11 at the bottom thereof, instead of at the side as shown in the drawing of the present application. Instead of using the tubular form of supporting arm 11, a shorter arm may be employed

in this case, and the arm may be modified in construction to have more nearly the form of a bracket which may be conveniently attached to the supporting framework surrounding the bottom of the knitting machine.

In order to assemble the cover 4 on the casing 1, the cover and casing are each provided with a central aperture through which a bolt or pin 15 is extended, with the head 16 of the bolt disposed in outwardly spaced relation to the outer face of the cover 4. To maintain this spaced relation of the head 16 of the bolt 15, the opposite end of the bolt is reduced to form a shoulder 17 which abuts against the inner face of the opposite side wall 2 of the casing 1. The reduced end 18 of the bolt is threaded and extends through the opening in the side wall 2, and on the outer end of the bolt, a nut 19 is mounted to firmly secure the bolt to the casing.

Loosely mounted on the bolt 15 between its head 16 and the cover 4 of the casing 1 is an arm 20 which extends radially from the bolt to a point somewhat beyond the marginal edge of the casing, at which point the arm 20 is laterally extended, as at 21, transversely across the casing. This laterally extended portion 21 of the arm 20 has mounted thereon a pair of laterally spaced thread guides 22, 22, each of which preferably has the form of bifurcated porcelain arms 23. The arm 20, together with the thread guides 22, 22 carried thereby, are free to move angularly about the axis of the bolt 15, and means is preferably provided for biasing the arm and thread guides in one direction, said means comprising a coiled spring 24 wound spirally in flat form and disposed against the outer face of the cover 4. One end of the spring is suitably anchored to the cover 4, as by laterally bending or offsetting the end of the spring, as at 25, and inserting the same in a small opening 26 in the cover. The opposite end of the spring is suitably anchored to the arm 20, as by forming a hook 27 on this end of the spring and engaging the hook in a notch 28 formed in the lower side of the arm 20. The spring thus serves to yieldingly urge the arm 20, together with the thread guides 22, 22, in a clockwise direction, as viewed in the drawing. To limit this movement, the casing 1 is provided with an abutment 29 which is disposed approximately on the horizontal axis of the stop motion device. This abutment may have any suitable form, and is illustrated in the drawing as having one arm 30 attached to the outer face of the wall 2 of the casing 1 and extending radially therefrom to a point somewhat beyond the marginal edge of the casing, at which point the arm 30 is laterally extended, at 31, so as to overlie the laterally extended portion 21 of the arm 20. Thus, the arm 20 normally occupies a position approximately horizontal, and in engagement with the abutment 29, while it is free to yield in a counter-clockwise direction against the biasing action of the spring 24. This biasing action may be varied by rotating the cover 4 in a clockwise direction to tighten the spring to the desired extent, and in a counter-clockwise direction to loosen the spring. This adjustment of the spring is readily accomplished by grasping the notched edge of the disc-like cover 4 on the side of the casing 1, and the spring 9 will yield sufficiently to allow the cover 4 to be rotated, while also serving to hold the disc 4 in any position to which it is moved during the adjustment, as will be obvious.

Pivotally mounted in the wall 2 of the casing 1 is a thread-engaging member 32 which preferably



has the form of a relatively stiff wire, the inner end of which is laterally extended through an opening 33 in the wall 2, and terminates in a radially offset portion 34, the latter forming a movable electrical contact. At the outside of the casing, the thread-engaging member is extended radially, as at 35, to a point somewhat beyond the marginal edge of the casing, at which point it is laterally extended, as at 36, and thence it is extended radially again, as at 37, between the thread guides 22, 22.

Disposed within the casing 1, and coacting with the movable contact 34 on the inner end of the thread-engaging member 32, is a fixed electrical contact 38 having one arm 39 extended to a position to be engaged by the movable contact 34 when the latter is rocked in a counter-clockwise direction pursuant to a corresponding movement of the thread-engaging member 32. The contact arm 39 is extended to form another arm 40 which is suitably secured to the insulating block 13 by fastenings, such as screws 41, 41. An electrical insulated conductor 42 is attached to the arm 40, as indicated in Figure 3 of the drawing, and leads through the supporting arm 11 for connection with the usual electrical circuit for controlling the power mechanism of the knitting machine. The conductor 42 forms one side of the electrical stop motion circuit, and the other side of the circuit is established by grounding the stop motion device to the frame of the knitting machine.

The operation of the stop motion device will be obvious from the foregoing and may be briefly summarized as follows. With the stop motion device arranged in the position as shown in the drawing, the thread designated T, at some point between the source of thread supply and the knitting instrumentalities, is placed in the thread guides 22, 22, so as to span the space therebetween, with the thread underlying the thread-engaging member 32, which latter member rests lightly upon the uper side of the thread. The tension of the spring 24 is so adjusted by means of the rotatable cover 4 at the side of the casing 1, as to cause the arm 20 and the thread guides 22, 22 to normally asume the position shown in full lines in Figures 1 and 3 of the drawing, under the normal operating tension in the thread. In this position, the arm 20 is engaged with the abutment 29, or, if preferred, the spring tension can be so adjusted that the arm will be somewhat spaced from the abutment. Should the tension in the thread increase appreciably beyond the normal tension, it will exert a downward pull on the thread guides 22, 22, thereby rocking the thread guides and their supporting arm 20 in a downward, counter-clockwise direction, which, in turn, allows the thread-engaging member 32 to drop by the action of gravity. Consequently, as the thread-engaging member 32 moves downwardly and swings about its inner end in a counter-clockwise direction, it will cause the movable contact member 34 within the casing 1 to engage the fixed contact 38, thereby closing an electrical circuit, which may be termed the stop motion circuit, and which in turn is operatively connected to the usual power mechanism of the knitting machine, the latter being more fully described in my prior patents. When the condition causing the excessive tension in the thread T has been remedied, the stop motion device will assume its normal position, and the stop motion circuit then is open, allowing the machine to operate in the usual manner.

Should the tension in the thread T become great enough, the thread will automatically displace itself from the thread guides **22**, **22**, as the thread guide supporting arm **20** rocks downwardly, and to facilitate such displacement, without breaking the thread, the lower arms of the thread guides **22**, **22** are made somewhat shorter than the upper arms, as shown in the drawing. In case the thread becomes displaced from the thread guides, or, should the thread break or run out, the thread-engaging member **32** will be released and will automatically fall by the action of gravity until the movable contact member **34** engages the fixed contact **38**, thus closing the stop motion circuit and interrupting operation of the knitting machine.

It will be understood that a separate stop motion device or unit, such as is shown in the drawing, will be provided for each thread feed of the knitting machine, and the location and arrangement of the stop motion devices may be varied to suit the particular machine or conditions of operation. Since my stop motion device described above is composed of few parts, it can be assembled very easily and quickly, and can be constructed at a very small cost, particularly having in view that the parts may be largely composed of simple stampings and standard parts which are readily available, and the form of the casing is especially adaptable to production by die-casting.

While the specific details have been herein shown and described, the invention is not confined thereto as changes and alterations may be made without departing from the spirit thereof as defined by the appended claims.

I claim:

1. A stop motion device, comprising a casing, a pin transversely extended through said casing centrally thereof and projecting outwardly therefrom at one side of said casing, said pin having an arm mounted on the projecting end of the same and movable angularly about the axis of the pin, said arm being extended radially from the pin to a point beyond the marginal edge of the casing, and thence laterally across the marginal edge of the casing, a pair of laterally spaced thread guides carried by the laterally extended end of said arm, abutment means on the casing for limiting angular movement of the arm in one direction, yieldable means for biasing said arm in a direction towards engagement with said abutment means, while permitting the arm to yield in the opposite direction, a gravity-operated thread engaging member pivotally mounted on the casing and extending from the casing between the laterally spaced thread guides, said thread-engaging member normally being adapted to rest against the upper side of the thread between the thread guides when the thread is disposed in the thread guides so as to span the space therebetween, and said thread-engaging member being free to move by gravity with the thread guide supporting arm when the tension in the thread exceeds that of the biasing means, and also free to move independently of the thread guide supporting arm when the thread breaks, runs out, and becomes displaced from the thread guides, respectively, a fixed electrical contact disposed within the casing, and a movable contact member also disposed within the casing and actuated by the thread-engaging member on gravity movement of the latter selectively responsive to excessive tension on the thread, displacement of the thread from the thread guides, breakage of the thread, and running out of the thread, respectively, for engagement with the fixed contact aforesaid.



2. A stop motion device, comprising a generally circular casing having a removable circular cover member mounted on one side thereof, said cover member being rotatable about the central axis of the casing, a thread guide supporting arm pivotally connected to the casing and extending generally radially from the central axis thereof, thread guide means mounted on the outer extremity of said arm, an abutment on the casing for limiting pivotal movement of said arm in one direction, and means yieldably interconnecting said arm and the cover member of the casing for normally urging said arm toward said abutment, while permitting yielding movement of said arm in the opposite direction.

3. A device as defined in claim 2, wherein the yieldable means comprises a spirally flat-wound spring lying relatively close to one side of the cover member of the casing.

4. A device as defined in claim 2, wherein the yieldable means comprises a spirally flat-wound spring lying relatively close to one side of the cover member of the casing, the outer end of said spring being attached to the thread guide supporting arm, and the inner end of said spring being attached to the cover member, with the tension in said spring adjustable pursuant to selective rotative adjustment of said cover member.

5. A device as defined in claim 2, wherein the yieldable means comprises a spirally flat-wound spring lying relatively close to one side of the cover member of the casing, the outer end of said spring being attached to the thread guide supporting arm, the inner end of said spring being attached to the cover member, with the tension in said spring adjustable pursuant to selective rotative adjustment of said cover member, and means for yieldably restraining said cover member in its selective positions of adjustment.

6. A device as defined in claim 2, wherein the yieldable means comprises a spirally flat-wound spring lying relatively close to one side of the cover member of the casing, the outer end of said spring being attached to the thread guide supporting arm, the inner end of said spring being attached to the cover member, with the tension in said spring adjustable pursuant to selective rotative adjustment of said cover member, and means for yieldably restraining said cover member in its selective positions of adjustment, said last-named means comprising a spring member mounted on said casing and yieldably engaging the peripheral edge of said cover member.

7. A device as defined in claim 2, wherein the yieldable means comprises a spirally flat-wound spring lying relatively close to one side of the cover member of the casing, the outer end of said spring being attached to the thread guide supporting arm, the inner end of said spring being attached to the cover member, with the tension in said spring adjustable pursuant to selective rotative adjustment of said cover member, and means for yieldably restraining said cover member in its selective positions of adjustment, said last-named means comprising a spring member mounted on said casing and yieldably engaging the peripheral edge of said cover member, said peripheral edge of the cover member being notched.

8. A device as defined in claim 2, in combination with a thread-engaging member adapted to be normally positioned to rest on the thread when

the thread is disposed in the thread guide means, said thread-engaging member being pivotally connected to the casing and extended to one side of the vertical axis of the casing so as to be gravity actuated on displacement of the thread from beneath the same, and a pair of normally open electrical contacts disposed within the casing and operable to circuit closing position responsive to gravity actuation of the thread-engaging member.

9. A device as defined in claim 2, in combination with a thread-engaging member having the form of a wire finger pivotally connected at one end to the casing and extending radially therefrom between the laterally spaced thread guide means, said finger being normally positioned to rest on the thread when the thread is disposed in the thread guide means, and being gravity-actuated on displacement of the thread from beneath the same, an electrical contact member disposed within the casing on the inner end of the finger aforesaid for pivotal movement therewith on gravity actuation of the finger, and a fixed contact member coacting with the movable contact, also disposed within the casing and insulated therefrom, said contact members being normally spaced from each other when the finger is supported by the thread.

10. A stop motion device, comprising a generally circular casing having a cover member mounted on one side thereof and rotatable about the central axis of the casing, a thread guide



supporting arm pivotally connected to the casing and movable in opposite directions about the central axis of the casing in a vertical plane, thread guide means mounted on the outer extremity of said arm, abutment means on the casing for limiting pivotal movement of said arm in one direction, yieldable means biasing said arm towards the abutment while permitting the arm to yield in the opposite direction responsive to tension in the thread exceeding the biasing means, said biasing means being adjustable responsive to rotation of the cover member, and a thread-engaging member pivotally connected at one end to the casing and extending generally radially therefrom to a point adjacent to the thread guide means on the arm, said thread-engaging member being freely movable in opposite directions in a vertical plane and normally resting upon the thread when the thread is disposed in the thread guide means to restrain said thread-engaging member against movement, while permitting gravity-actuated movement of the thread-engaging member when the thread is displaced from the guide means, an electrical contact member disposed within the casing and movable responsive to the thread-engaging member, and a fixed electrical contact member also disposed within the casing and normally spaced from the movable contact member aforesaid but engageable therewith on gravity actuation of the thread-engaging member.

WILLIS A. INGALLS.