US00D596283S

(12) **United States Design Patent**
Martinez et al.

(10) **Patent No.: US D596,283 S**
(45) **Date of Patent: ** Jul. 14, 2009**

(54) **AIR MOVER**

(75) Inventors: **David Martinez**, Williamsport, PA (US); **Robert L. Crevling, Jr.**, Williamsport, PA (US)

(73) Assignee: **Shop-Vac Corporation**, Williamsport, PA (US)

(**) Term: **14 Years**

(21) Appl. No.: **29/286,568**

(22) Filed: **May 11, 2007**

(51) **LOC (9) Cl.** **23-04**
(52) **U.S. Cl.** **D23/383**
(58) **Field of Classification Search** D23/383; 15/405, 330, 327.5
See application file for complete search history.

(56) **References Cited**

U.S. PATENT DOCUMENTS

D245,994	S		10/1977	Olson
D282,396	S		1/1986	Weaver
D308,417	S		6/1990	Belanger et al.
D338,292	S		8/1993	Schmitz et al.
D339,432	S		9/1993	Rakocy et al.
D340,326	S		10/1993	Genovese
5,265,895	A		11/1993	Barrett
D354,378	S		1/1995	McKnight et al.
D361,414	S		8/1995	Trautloff et al.
D480,467	S		10/2003	White
D484,966	S		1/2004	Yamamoto
D503,788	S		4/2005	Wang et al.
D514,217	S		1/2006	Wilson
D517,677	S		3/2006	Bartholmey
D532,897	S	*	11/2006	Yoshida et al. D23/383

OTHER PUBLICATIONS

Ridgid, Professional Portable Air Mover, www.ridgid.com/Tools/Air-Mover/EN/index.htm, Nov. 26, 2007, see attached website printout dated Nov. 26, 2007.
Sanitaire, Air Movers, www.sanitairevac.com/commercial/products/air_movers/SC6052.jsp, Nov. 26, 2007, see attached website printout dated Nov. 26, 2007.
Basic, Wind Dragon, www.basiccoatings.com/asp/equipment/wind-dragon.asp, Nov. 26, 2007, see attached website printout dated Nov. 26, 2007.

* cited by examiner

Primary Examiner—Lisa P Lichtenstein
(74) *Attorney, Agent, or Firm*—Marshall, Gerstein & Borun LLP

(57) **CLAIM**

The ornamental design for an air mover, as shown and described.

DESCRIPTION

FIG. **1** is a back right perspective view of an air mover that has the design.

FIG. **2** is a back left perspective view of the air mover.

FIG. **3** is a top view of the air mover.

FIG. **4** is a back view of the air mover.

FIG. **5** is a right-side view of the air mover.

FIG. **6** is a front view of the air mover.

FIG. **7** is a left-side view of the air mover; and,

FIG. **8** is a top view of the air mover.

The broken line showing of portions of the air mover is included for the purpose of illustrating environmental structure and forms no part of the claimed design.

1 Claim, 8 Drawing Sheets

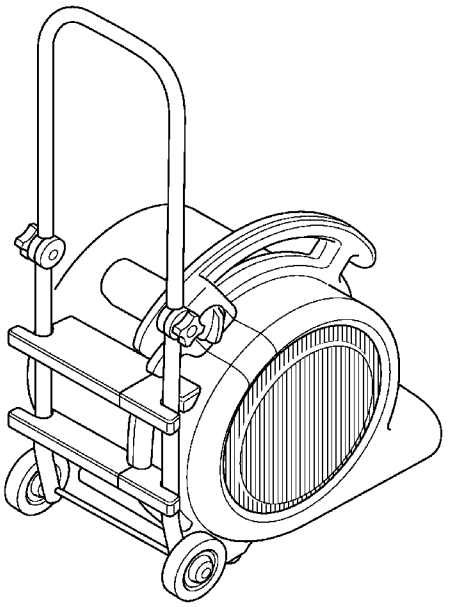

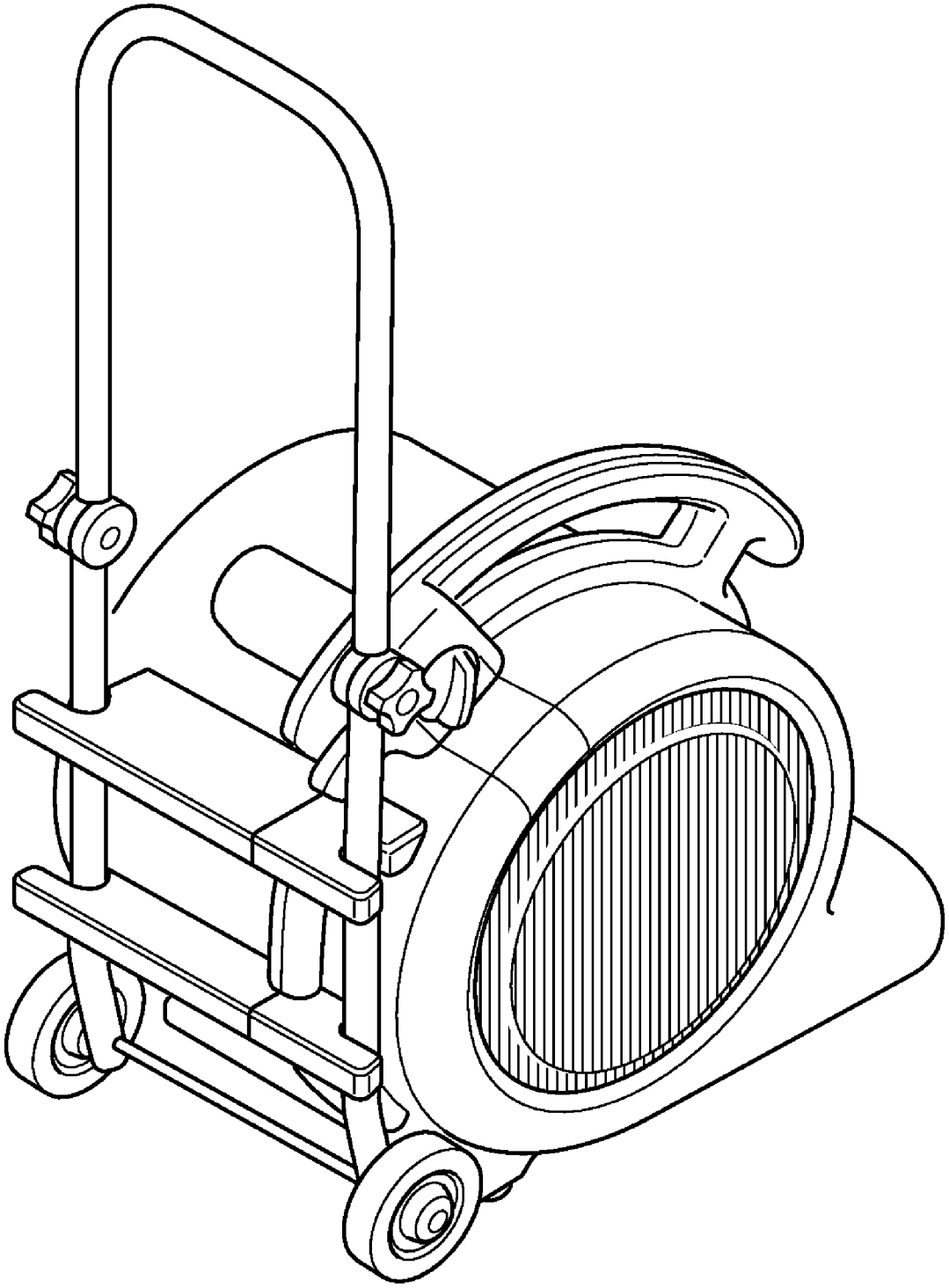

FIG. 1

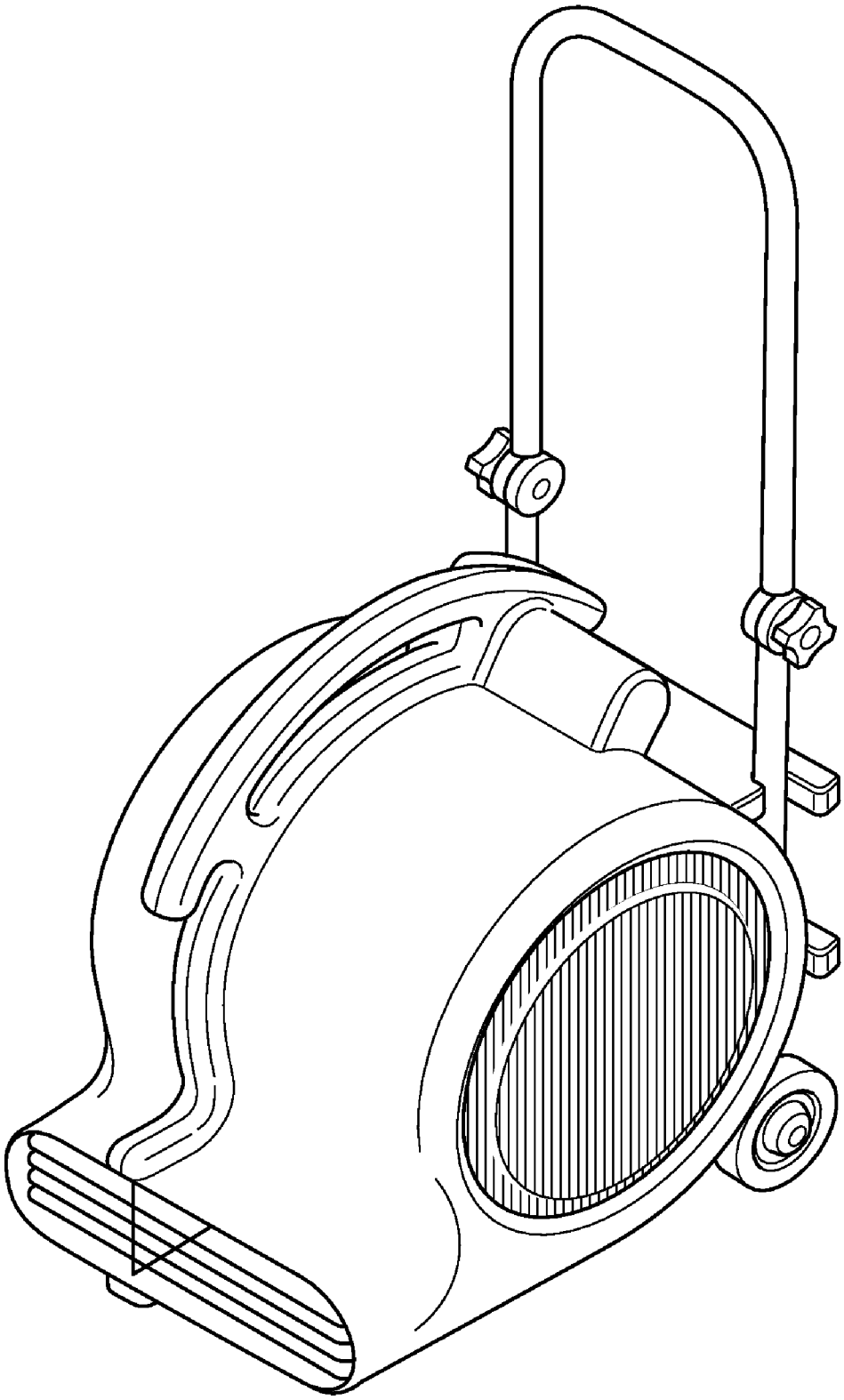

FIG. 2

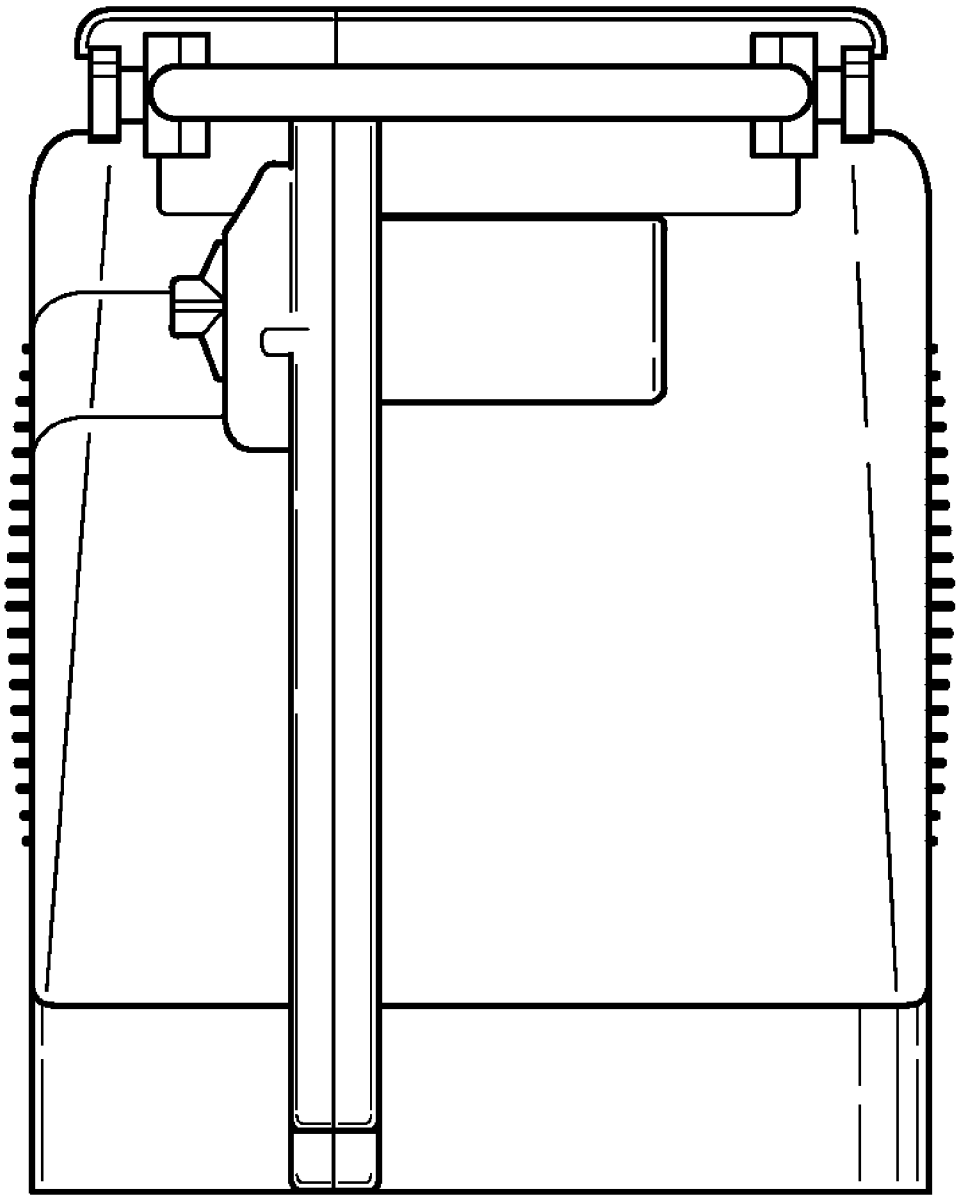

FIG. 3

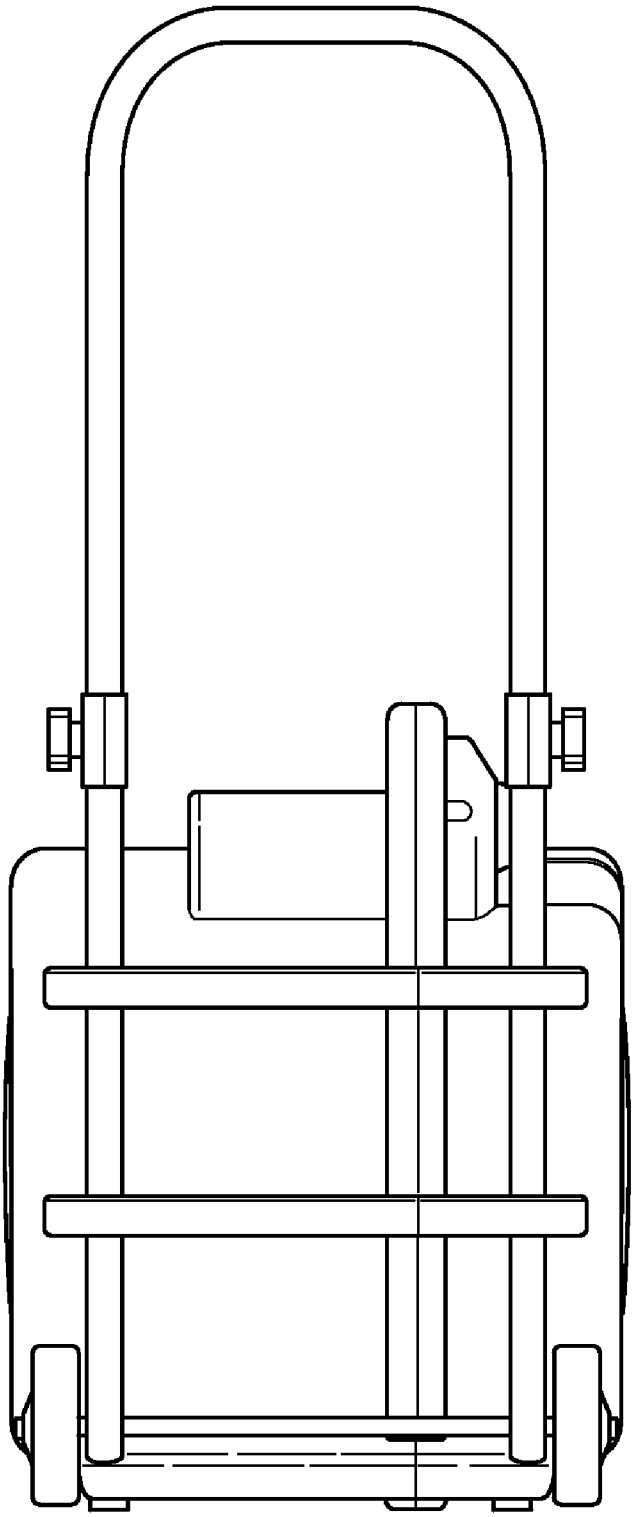

FIG. 4

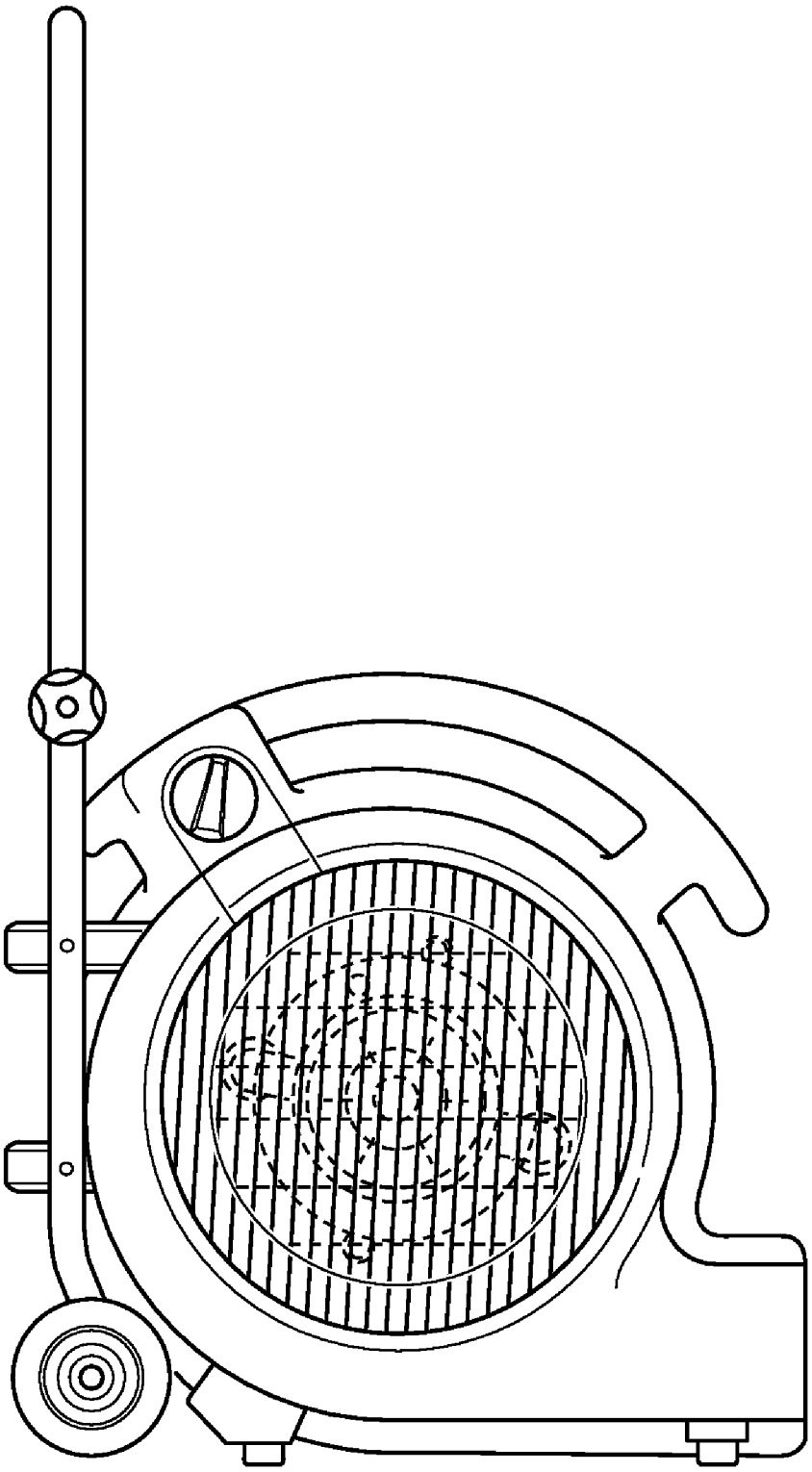

FIG. 5

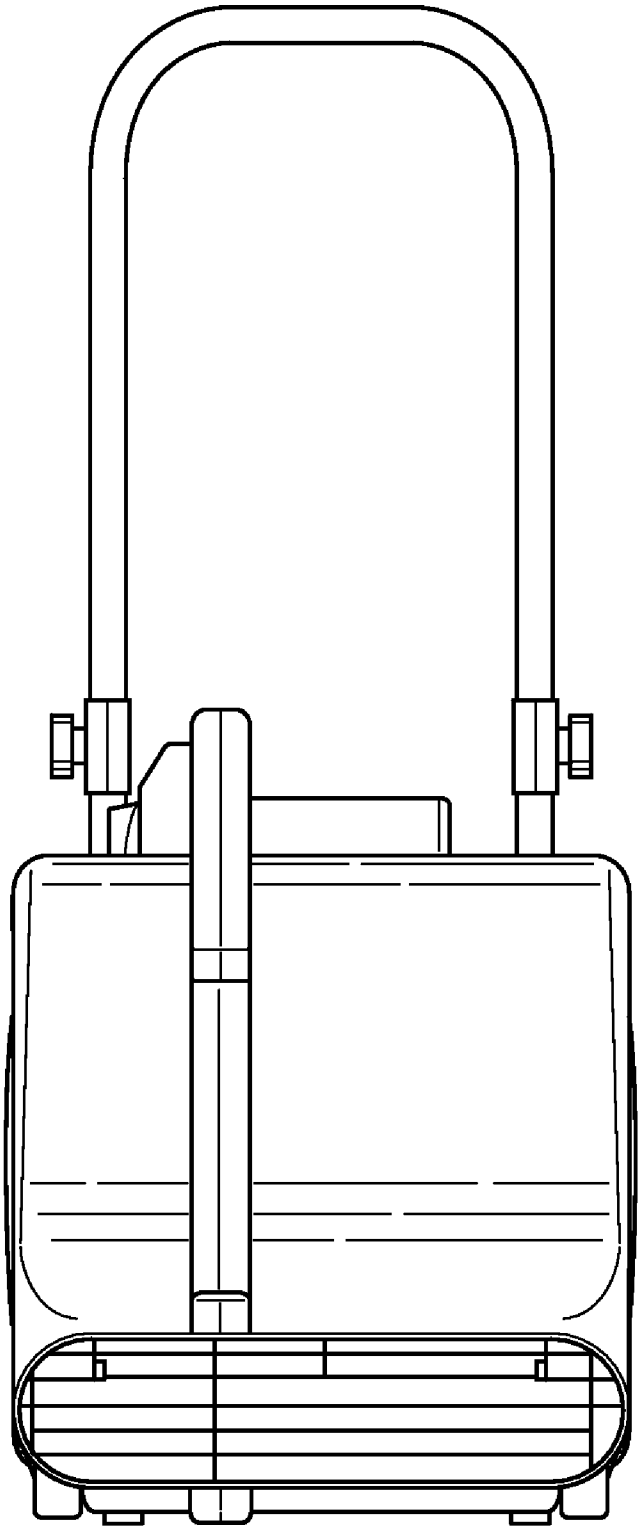

FIG. 6

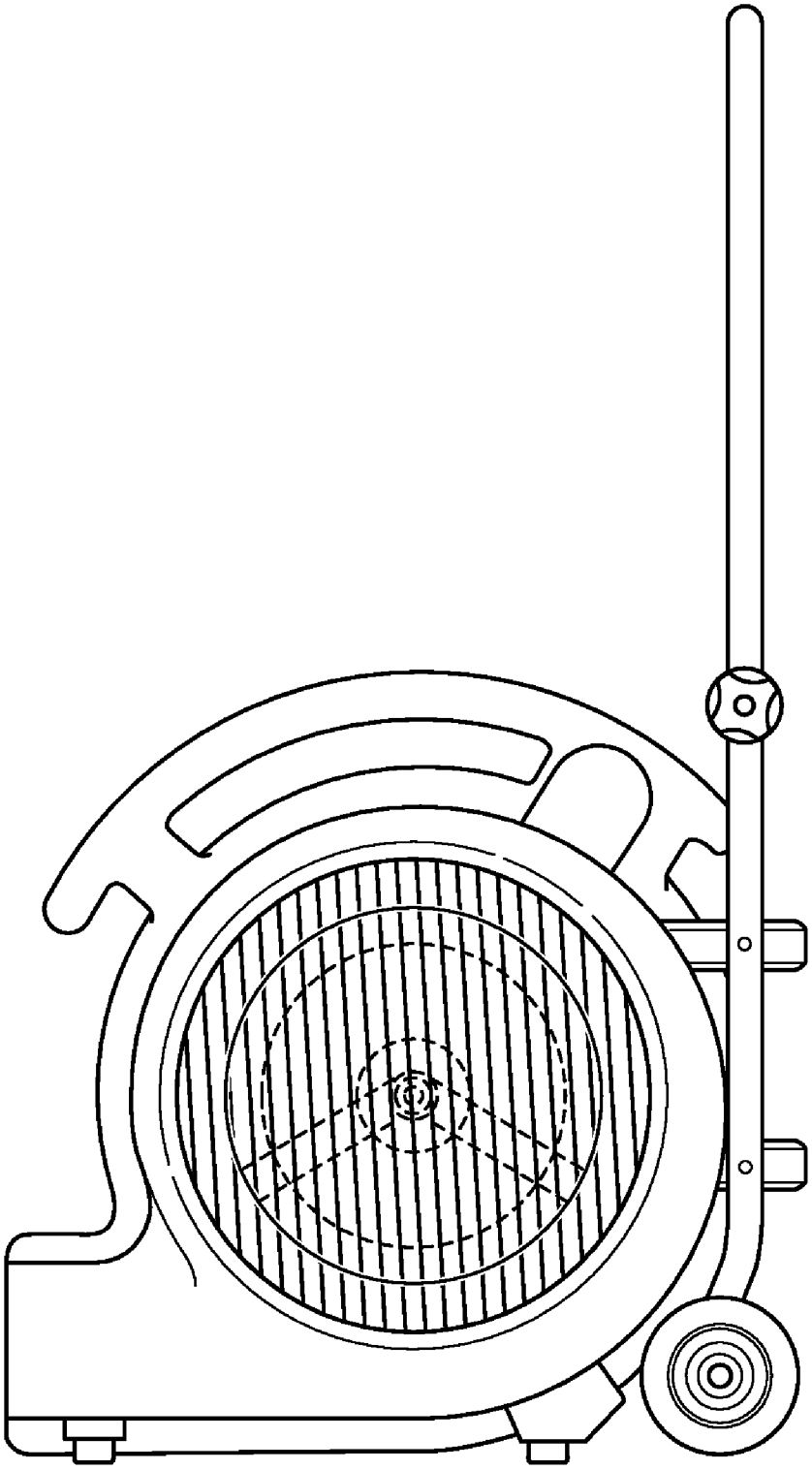

FIG. 7

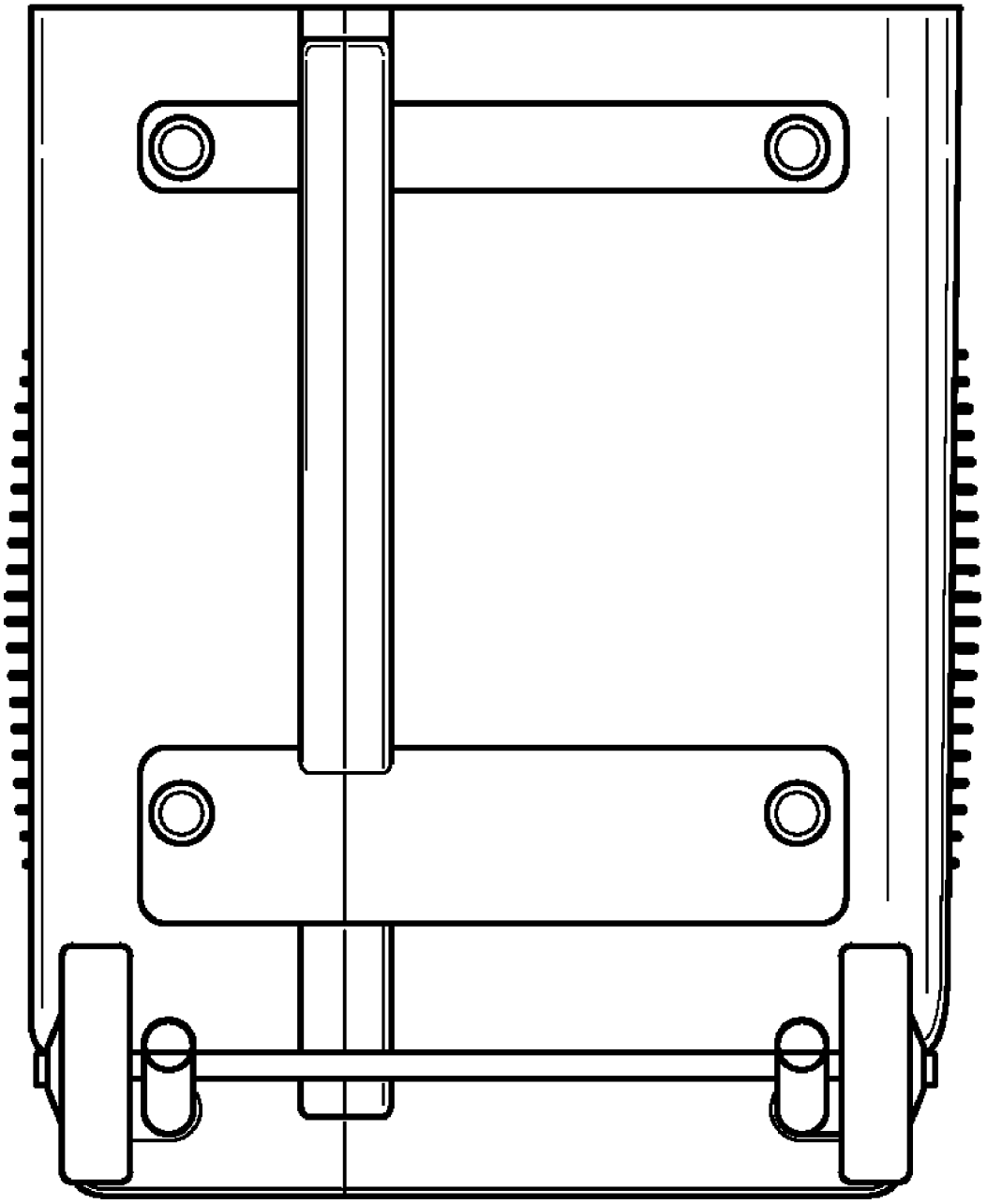

FIG. 8