(No Model.)

A. RITTER.

EXTENSIBLE TRESTLE.

No. 590,278. Patented Sept. 21, 1897.

Fig. 1.

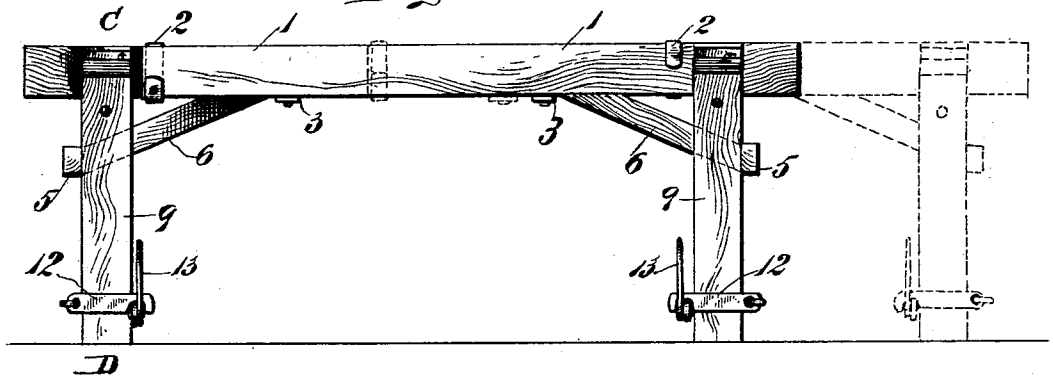

Fig. 2.

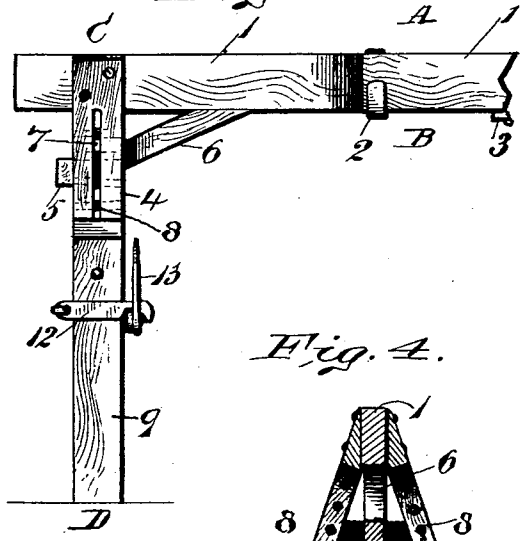

Fig. 3.

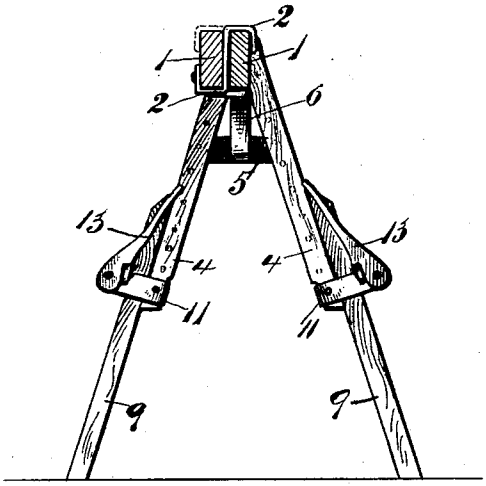

Fig. 4.

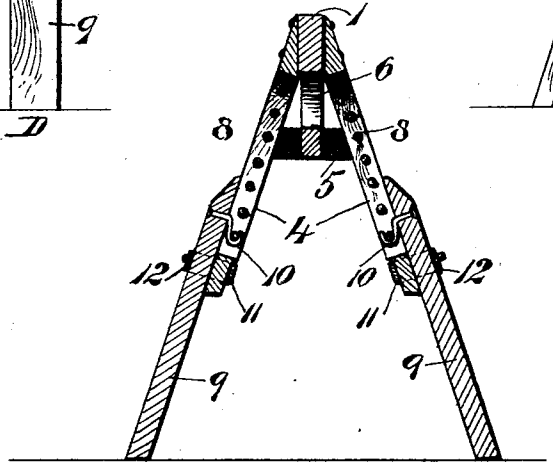

Fig. 5.

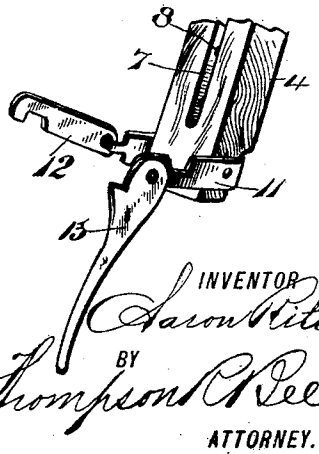

WITNESSES:

Joseph Ringland

INVENTOR
Aaron Ritter
BY
Thompson & Peck
ATTORNEY.

THE NORRIS PETERS CO., PHOTO-LITHO., WASHINGTON, D. C.

UNITED STATES PATENT OFFICE.

AARON RITTER, OF HOOPESTON, ILLINOIS, ASSIGNOR OF ONE-HALF TO BYRON E. CRONKHITE, OF ROSSVILLE, ILLINOIS.

EXTENSIBLE TRESTLE.

SPECIFICATION forming part of Letters Patent No. 590,278, dated September 21, 1897.

Application filed March 22, 1897. Serial No. 628,683. (No model.)

To all whom it may concern:

Be it known that I, AARON RITTER, a citizen of the United States, residing at Hoopeston, in the county of Vermilion and State of Illinois, have invented new and useful Improvements in Extensible Trestles, of which the following is a specification.

My invention relates to certain new and useful improvements in trestles, particularly those intended for the use of plasterers, paperhangers, decorators, and other artisans; and it consists in means whereby the said trestle may be extended longitudinally as well as vertically for obvious reasons, hereinafter set forth.

The object of this my invention is to construct a trestle that can be extended longitudinally for the purpose of either receiving a narrower or a wider platform or to permit a wide range of movement of the platform along the said trestles without changing the position of the latter and to provide means whereby the trestles may be raised or lowered and adjusted in any vertical position within the range of extension to raise or lower the platform supported by said trestles to suit the convenience of the operator when working or operating on walls or ceilings of variable heights. I attain these objects by means of the form of trestle illustrated in the accompanying drawings, in which similar numerals of reference designate like parts throughout the several views.

Figure 1 is a side elevation of my form of trestle and showing in dotted lines the same extended longitudinally. Fig. 2 is a broken-off elevation of the end of the trestle, showing the extensible legs of the same extended to their extreme extent. Fig. 3 is a transverse sectional end view of the same, taken through the line A B. (See Fig. 2.) Fig. 4 is a similar view taken through the line C D, (see Figs. 1 and 2,) and Fig. 5 is a perspective broken-off view of a portion of the supporting-leg of the trestle and showing the securing-clamp of the extensible leg thereof.

The trestle is composed of two extensible end sections both of which are alike in form and construction, and each of these sections is composed of the top beam 1, which is provided with the connecting and supporting **S**-formed clips 2, which lap under the bottom side of the beam 1 at or near its end, and is secured thereto by a suitable bolt passing through the lower bends of said clip and the beam, said clip having its top bend overlapping the top edge or side of the beam 1 of the other section composing the trestle, and is provided for the purpose of retaining said beams side by side and in close contact, yet at the same time holding said beams in contact in such a manner as to permit them to be moved in the guiding and retaining clips when it is required to either extend or diminish the length of the span of the trestle.

On the bottom side of each of the beams 1 and at a suitable distance from the projecting ends thereof is secured, by a suitable wood-screw, the strip 3, which laps under the under side of its contiguous beam in such a manner as to contact with the similar opposing strip secured on the adjacent beam, and is provided for the purpose of forming a stop to prevent the said end sections of the trestle from being extended too far apart longitudinally to disengage the beams 1 from their retaining and supporting **S**-clips 2.

The beams 1 are each provided with the opposite and diagonally-extending legs 4, which are secured at their top ends to sides of the said beams 1 at or near their supporting ends, and the said legs are braced or tied by the cross-braces 5 and the diagonal braces 6, extending diagonally from the center of the top sides of said cross-braces to the under sides of the said beams and firmly secured thereto by suitable wood-screws or other securing means.

The legs 4 are each provided with a slot 7, and each of the said slots extends longitudinally and centrally along the wider sides thereof the greater portion of their lengths. Transversely through the said slots are arranged a series of rods or rounds 8, which are preferably arranged at regular fixed intervals apart corresponding with those of the opposite legs and the other legs each to each.

Each of the extensible legs 9 is provided with a hook 10, which projects from the face of said leg sufficiently to enter into the slot

7 and engage any one of the series of said rods 8 to retain said extension-leg 9 in its adjusted position.

Each of the legs 4 has secured at its bottom end the clip 11, the bent ends of which extend outwardly beyond the edge of the extensible leg 9, between which extensions the latter is adapted to freely slide. On one of the said projecting ends of the said clip 11 is linked or hinged the clamping-cap 12, which is notched at its free end and at the bottom edge thereof to permit the end of said cap to drop into the similarly-formed notch cut or formed in the top edge of the projecting end of the said clip 11 to cause the top edges of the said clamping-cap and the projecting end of said clip to drop into alinement. On the notched projecting end of said clip 11 is pivoted the cam-lever 13, which is provided for the purpose of firmly pressing the said cap 12 tightly against the extensible leg 9 to rigidly secure and bind the same to the fixed leg 4.

The various uses to which this form of trestle may be applied and the manner of varying the span and the height of the trestle are apparent from an inspection of the accompanying drawings and need no special explanation.

Having thus fully described the nature of this my invention, what I claim as new and useful, and desire to cover by Letters Patent of the United States therefor, is—

1. In an extensible trestle, the combination of a supporting-beam, end supporting-legs extending diagonally from and secured to the ends of such beam, said legs having longitudinally-extending slots 7, the pins 8, the hooks 10, the extensible legs 9, and means whereby said extensible legs are clamped to said fixed legs, substantially as and for the purpose set forth.

2. In an extensible trestle, the combination with the end sections thereof composed of two beams placed side by side, the S-clips 2, and the stops 3, said beams each provided with the supporting-legs 4, having the longitudinally-extending slots 7, and the pins 8, of the extensible legs 9, the clamps 11, the cap 12, the clamping-lever 13, and the hook 10, all substantially as and for the purpose set forth.

In testimony whereof I have hereunto set my hand in the presence of two subscribing witnesses.

AARON RITTER.

Witnesses:
A. L. KNOX,
W. J. KELLOGG.