No. 623,821. Patented Apr. 25, 1899.

D. W. PAYNE.

ELECTRICALLY CONTROLLED VALVE GEAR FOR GAS OR OTHER MOTORS.

(Application filed Mar. 25, 1898.)

(No Model.)

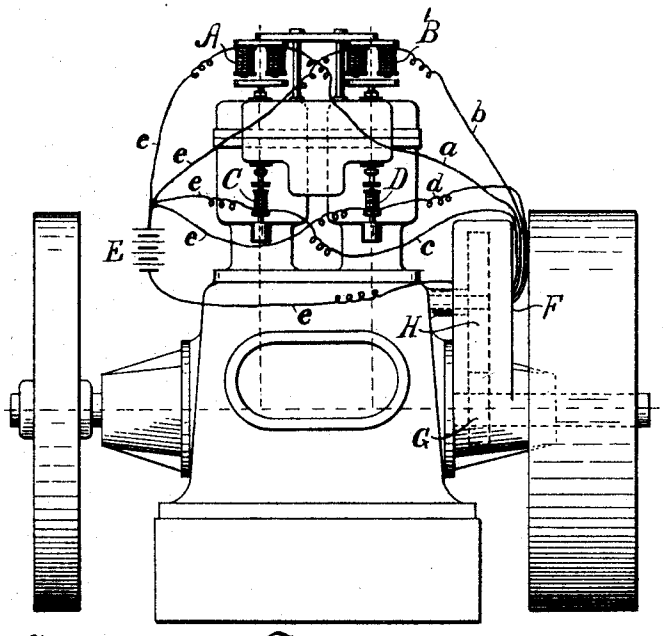

Fig. 1.

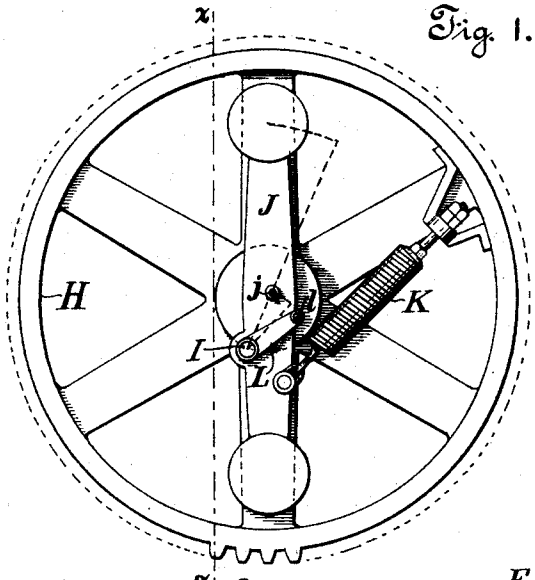

Fig. 2.

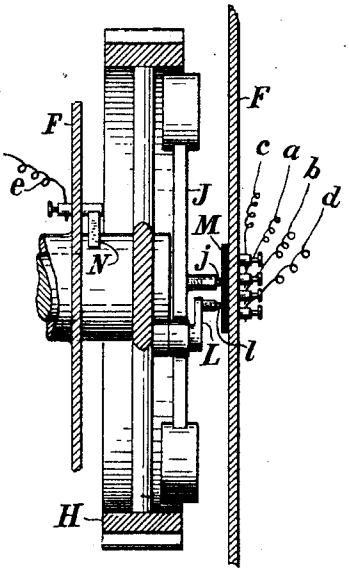

Fig. 3.

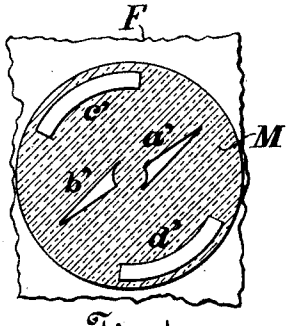

Fig. 4.

WITNESSES:

Henry S. Ridfield.

C. Tracey Stagg

INVENTOR

David W. Payne

BY

Eugene Diven

ATTORNEY

THE NORRIS PETERS CO., PHOTO-LITHO., WASHINGTON, D. C.

UNITED STATES PATENT OFFICE.

DAVID W. PAYNE, OF ELMIRA, NEW YORK.

ELECTRICALLY-CONTROLLED VALVE-GEAR FOR GAS OR OTHER MOTORS.

SPECIFICATION forming part of Letters Patent No. 623,821, dated April 25, 1899.

Application filed March 25, 1898. Serial No. 675,144. (No model.)

To all whom it may concern:

Be it known that I, DAVID W. PAYNE, a citizen of the United States, residing at Elmira, in the county of Chemung and State of New York, have invented certain new and useful Improvements in Electrically-Controlled Valve-Gears for Gas or other Motors, of which the following is a specification.

My invention relates more particularly to improvements in valve-gears wherein the valves are operated by electromagnets, the magnets being energized at the proper times by means of a commutator and brushes actuated by a moving member of the motor; and the main object of my improvements is to provide a valve-gear of this nature which shall be especially adapted for gas, oil, and other explosive-motors and by which I can dispense entirely with mechanically-operated valves and their attendant noise and vibration.

A further object is to provide means for governing and controlling the magnets which actuate the admission-valves according to the speed of the motor.

I attain these objects by the mechanism illustrated in the accompanying drawings, in which—

Figure 1 is an elevation of a gas-motor, showing the electrical connections; Fig. 2, a side elevation of the governor-wheel with a governor and contact-brushes attached; Fig. 3, a cross-section on the line $x x$ in Fig. 2, showing also portions of the governor-casing in section; and Fig. 4, an inside view of a portion of the governor-casing, showing the commutator-plates.

Similar letters refer to similar parts throughout the several views.

A and B represent the magnets which actuate the admission-valves, and C and D the magnets operating the exhaust-valves, of the motor. From magnets A and B run wires a and b to their commutator-plates on the inside of the case F, and from magnets C and D run the wires c and d to their respective commutator-plates. The return-circuit is established through a generator E, which may be a battery or a small dynamo run by the motor itself or other source of electricity, the current being carried back to the magnets through the wires e.

The gas-motor taken for illustration is a double-cylinder single-acting engine, the gas being admitted above the pistons once in every two revolutions of the shaft, the cycle of operation comprising, first, the admission of gas into the cylinders on the downstroke, then the compression of gas on the upstroke, then the explosion and expansion of the gas on the next downstroke, and, finally, the exhaust from the cylinders on the next upstroke. The valves must therefore be operated once in every two revolutions of the crank-shaft. In order to accomplish this, I provide two gear-wheels G and H, the gear G being keyed to the crank-shaft and the gear H being hung above this gear within the gear-case F. The gear H is double the diameter of gear G, and therefore makes one revolution to two of the shaft. This gear H carries a centrifugal governor and the brushes, which establish the electric currents to energize the magnets when passing over the commutator-plates with which the magnets are connected. In Fig. 2 this gear H is represented as carrying a centrifugal governor J, pivoted at I and regulated in the usual manner through a spring K. At a point a little way from the center of rotation when the governor-arm is in its normal position is located a boss or socket carrying a contact-brush j, which may be of any approved design. As the governor-arm is thrown away from normal by increased speed of the motor it will follow the path represented by the broken lines in Fig. 2 and the brush j will be thrown away from the center of rotation, as indicated by said broken lines, and this will cause the magnets A and B, controlling the admission-valves, to be energized and the valves be held open for a shorter time, as will presently appear. On the pivot-stud I is rigidly attached an arm L, which carries a brush l, this brush, which may also be attached in any other suitable manner to gear H, always following a circle at a fixed radius from the center of rotation and controlling the magnets which actuate the exhaust-valves, which valves are given the same relative period of opening, no matter what the speed of the motor.

In Fig. 3, M represents a plate of insulating material attached to the inside of case F and in axial alinement with the gear H. In this insulating-plate are embedded the com-

mutator-plates a', b', c', and d', (see Fig. 4,) which by means of binding-posts on the outside of the case are connected, respectively, to the wires a, b, c, and d. The brushes j and l pass over the face of a plate M, being pressed lightly against it by springs in the sockets, the brush j contacting alternately with the commutator-plates a' b' and the brush l contacting alternately with the plates c' d', which latter plates are set in a circle outside of the extreme points of the plates a' b'.

The gears G and H are preferably insulated from the other parts of the motor, and the return-circuit is made in any approved manner—as, for instance, by means of a brush N, which contacts with the hub of gear H, a binding-post on the outside of casing connecting this brush with the return-wire e.

In operation when the motor is running at low speed or with its maximum load the governor-arm J will assume its normal position, as shown in Fig. 2, and the brush j will travel in an arc across the commutator-plates a' b' where they are widest, and the admission-ports will be opened for their longest periods. As the load lightens and the speed increases the brush j will be thrown away from the center of rotation, and as the plates a' b' taper outwardly the travel of the brush j across these plates will be shortened, and the point of admission or cut-off of the admission-ports will consequently be made later or earlier, respectively, according to the position and adjustment of the commutator-plates until the minimum load is reached, when the brush j will be thrown out far enough so that the period of contact will be just sufficient to admit the required amount of gas to maintain the motor at nominal speed.

While I have shown the commutator arranged for a two-cylinder motor of the single-acting type, it will readily be seen that the commutator by doubling the number of plates and setting them at ninety degrees apart can be arranged for either a two-cylinder double-acting motor or a four-cylinder single-acting motor. The commutator, as shown, could also be applied to a single-cylinder double-acting motor, and by arranging the plates in three pairs at one hundred and twenty degrees apart a three-cylinder motor could be accommodated. Likewise a proper arrangement of the plates will provide for a single-cylinder single-acting motor. Moreover, while I have shown and described my invention as applied to gas-motors, I do not wish to be confined to this particular application of it, since the essential points of the invention might also readily be adapted to other motors wherein an expanding gas or vapor is used with a varying point of admission or cut-off and also wherein the valves are to be actuated at every stroke of the piston.

By the use of the term "centrifugal governor" I intend to designate and include any form of shaft or fly-wheel governor as distinguished from the ball-governor, it being customary in the engine trade to so designate and distinguish these two types of governors. The terms "commutator-plate" and "commutator-brush" as used herein are relative terms, and I do not wish to be confined to the positions assumed for them as herein described, as such positions might very readily be reversed without departing from the spirit of my invention—that is to say, the contact-plates might be carried on the governor and the brush or brushes made stationary.

I am aware that electromagnets have heretofore been applied to the valve-gear of steam and other motors, and I do not claim this broadly as my invention.

What I claim, and desire to secure by Letters Patent, is—

1. The combination, with an electrically-controlled valve-gear, of a commutator contact-plate in circuit with the valve-controller, a commutator-brush also in circuit, one stationary and the other revoluble, and a centrifugal governor carrying the revoluble member, whereby the latter is made to traverse the stationary member and control the operation of the valve.

2. The combination, with an electrically-controlled admission-valve of a gas or other motor, of a commutator contact-plate in circuit with the valve-controller, a revolving commutator-brush also in circuit, and a centrifugal governor carrying the brush, whereby the latter is made to traverse the contact-plate with varying periods of contact to regulate the point of admission or cut-off according to the speed of the motor.

3. The combination, with the admission and exhaust valves of a gas or other motor, of electromagnets to actuate the valves, a commutator in circuit with the magnets, a centrifugal governor also in circuit, and a commutator-brush carried on the arm of the governor in contact with the commutator to actuate the admission-valve, and a second commutator-brush revolving with the governor in a fixed orbit in contact with the commutator to actuate the exhaust-valve, substantially as described.

4. In a motor, the combination of electrically-controlled admission and exhaust valves, a commutator comprising a tapering contact-plate radiating from the center of the commutator and an annular contact-plate concentric therewith, a centrifugal governor in axial alinement with the commutator, a commutator-brush on the governor to traverse the first-named plate, and a commutator-brush revolving with the governor in a fixed orbit to traverse the second plate, all in proper circuit with the valve-controllers, whereby a variable admission or cut-off and fixed exhaust is obtained, substantially as described.

5. The combination, with an electrically-controlled admission-valve of a gas or other motor, of a commutator contact-plate in circuit with the valve-controller, a revolving commutator-brush also in circuit, a centrifu-

gal governor carrying the brush, and means for imparting from the motor to the governor a different speed from that of the motor, whereby the commutator-brush is made to traverse the contact-plate once in a fixed number of revolutions of the motor-shaft to actuate the valve at the proper periods and vary the point of admission or cut-off.

6. In a gas-motor, the combination, with an electrically-controlled valve-gear, of a commutator contact-plate in circuit with the valve-controller, a commutator-brush also in circuit, one stationary and the other revoluble, and means for imparting from the motor to the revoluble member a different speed from that of the motor, whereby the one is made to traverse the other once in a fixed number of revolutions of the motor-shaft to operate the valve at the proper periods.

In testimony whereof I have affixed my signature in presence of two witnesses.

DAVID W. PAYNE.

Witnesses:
C. TRACEY STAGG,
HENRY S. REDFIELD.