W. H. WITT.

TWEEZERS FOR FISHBONES.

APPLICATION FILED JAN. 24, 1914.

1,117,740.

Patented Nov. 17, 1914.

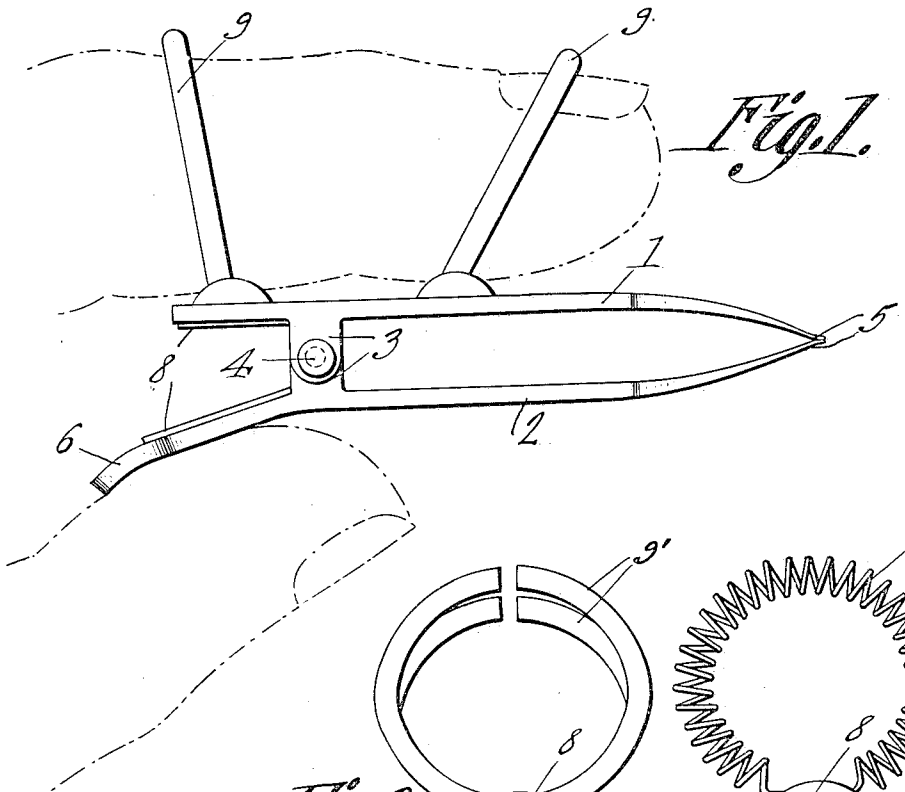

Fig. 1.

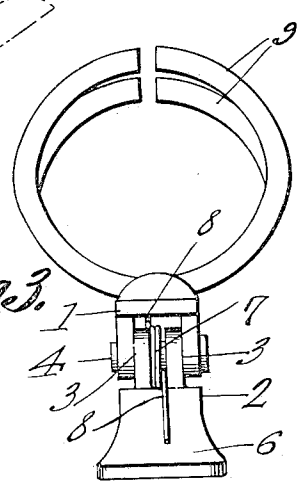

Fig. 3.

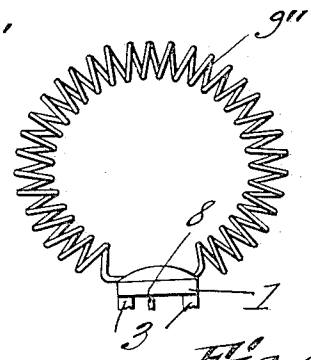

Fig. 4.

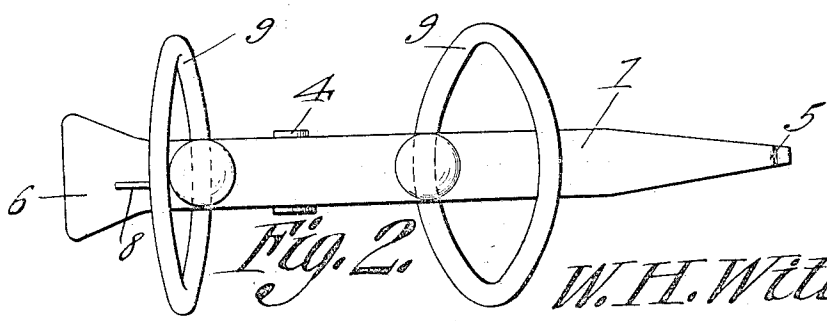

Fig. 2.

W. H. Witt, Inventor

Witnesses

J. P. Tomeis

S. Willson

by C. A. Snow & Co.

Attorneys

UNITED STATES PATENT OFFICE.

WILLIAM H. WITT, OF PETERSBURG, VIRGINIA.

TWEEZERS FOR FISHBONES.

1,117,740. Specification of Letters Patent. Patented Nov. 17, 1914.

Application filed January 24, 1914. Serial No. 814,232.

To all whom it may concern:

Be it known that I, WILLIAM H. WITT, a citizen of the United States, residing at Petersburg, in the county of Dinwiddie and State of Virginia, have invented new and useful Tweezers for Fishbones, of which the following is a specification.

The present invention appertains to tweezers for picking the bones out of fish meat, and aims to provide a novel and improved implement of that character which may be conveniently applied to the index finger of one hand, to be operated by the thumb, in order that the fish bones may be conveniently extracted or withdrawn.

With the foregoing general object outlined, and with other objects in view, which will be apparent as the nature of the invention is better understood, the present invention resides in the combination and arrangement of parts and in the details of construction hereinafter described and claimed, it being understood that changes in the precise embodiment of the invention herein disclosed can be made within the scope of what is claimed without departing from the spirit of the invention.

The invention has been illustrated in its preferred embodiment in the accompanying drawing, wherein—

Figure 1 is a side elevation of the tweezers as applied to the index finger. Fig. 2 is a plan view of the tweezers. Fig. 3 is an end view of the tweezers embodying modified finger-receiving elements. Fig. 4 is a fragmental end view of the tweezers embodying a second variation of finger-receiving elements.

In carrying out the present invention, there is provided tweezers or pincers embodying the levers 1 and 2, which are provided with the overlapping ears 3 at their side edges and between their butt ends and tips, a rivet or pivot pin 4 being passed through the ears 3 to pivot or fulcrum the levers or tweezer members together. The tips or outer ends 5 of the levers or tweezer members 1 and 2 are relatively sharp, and are adapted to engage the fish bones in such a manner, that they may be readily and conveniently extracted from the meat.

The butt end or inner arm of the lever 2 is formed into a relatively wide and angular thumb piece or rest 6, against which the first phalange of the thumb may be placed to swing the lever or tweezer member 2.

The levers or tweezer members are spring pressed to hold the tips 5 normally in contact and to this end, a coiled wire torsional spring 7 is mounted upon the central portion of the pin 4 between the ears 3 at the side edges of the levers, and has its ends or terminals 8 disposed between the inner ends or arms of the levers, to thereby yieldingly hold the tips 5 of the levers in engagement.

The lever or tweezer member 1 is adapted to be applied to the index finger, and to this end, a pair of rings 9 are soldered or otherwise secured to the arms of the lever 1, at the opposite sides of the pivotal portion of the said lever. The rings or finger-receiving elements 9 preferably diverge away from each other, and are designed to receive the first and second phalanges of the index finger, respectively.

In use, the tweezer is applied to the index finger by slipping the rings 9 over the first and second phalanges of the said finger, which will permit the device to be readily manipulated while eating. The first phalange of the thumb may be conveniently placed against the thumb piece 6, in order that the levers or tip thereof, may be opened to grasp or pluck the bones, whereby they may be readily extracted or withdrawn from the meat. The angular thumb piece 6 permits the lever 2 to be conveniently pressed against the tension of the spring 7, and when the thumb piece 6 is released, the tips 5 of the levers or tweezer members will be pressed together, under the influence of the spring 7, whereby the fish bone may be clamped between the said tips.

In the modification illustrated in Fig. 3 the rings 9′ are split, in order that they may expand to receive the index finger snugly, whereby the rings will be flexible to accommodate various sizes of fingers.

In the variation illustrated in Fig. 4, the rings 9″ are constructed of coiled wire, and are thus rendered elastic for receiving the index finger in a convenient manner.

Having thus described the invention, what is claimed as new is:

1. Tweezers of the nature described, comprising a pair of levers pivoted between

their ends and spring pressed, and finger-receiving elements attached to the arms of one lever, the inner arm of the other lever being disposed angularly and formed into a thumb piece.

2. Tweezers of the nature described, comprising a pair of levers pivoted between their ends and spring pressed, and rings attached to the arms of one lever, the inner arm of the other lever being formed into a thumb piece.

In testimony that I claim the foregoing as my own, I have hereto affixed my signature in the presence of two witnesses.

WILLIAM H. WITT.

Witnesses:
GEO. C. ZEIGLER,
ROBT. H. COLANIN.