(12) INTERNATIONAL APPLICATION PUBLISHED UNDER THE PATENT COOPERATION TREATY (PCT)

(19) World Intellectual Property Organization
International Bureau

(43) International Publication Date
7 May 2015 (07.05.2015)

WIPO | PCT

(10) International Publication Number
WO 2015/065822 A4

(51) International Patent Classification:
A61L 9/12 (2006.01) *A01M 1/20* (2006.01)

(21) International Application Number:
PCT/US2014/062095

(22) International Filing Date:
24 October 2014 (24.10.2014)

(25) Filing Language: English

(26) Publication Language: English

(30) Priority Data:
14/067,241 30 October 2013 (30.10.2013) US

(71) Applicant: **S.C. JOHNSON & SON, INC.** [US/US]; 1525 Howe Street, Racine, WI 53403 (US).

(72) Inventors: **KLEMM, Robert, W.**; 426 Pheasant Run, Colgate, WI 53017 (US). **SHARMA, Nitin**; 6138 - 114th Avenue, Kenosha, WI 53142 (US). **FAHY, Cathal, L.**; 1650 Wisconsin Avenue, Racine, WI 53403 (US). **SHI, Deliang**; 6127 - 115th Avenue, Kenosha, WI 53142 (US).

(74) Agent: **MEIER, Linda, Blair**; S.C. JOHNSON & SON. INC., 1525 Howe Street, Racine, WI 53403 (US).

(81) Designated States *(unless otherwise indicated, for every kind of national protection available)*: AE, AG, AL, AM, AO, AT, AU, AZ, BA, BB, BG, BH, BN, BR, BW, BY, BZ, CA, CH, CL, CN, CO, CR, CU, CZ, DE, DK, DM, DO, DZ, EC, EE, EG, ES, FI, GB, GD, GE, GH, GM, GT, HN, HR, HU, ID, IL, IN, IR, IS, JP, KE, KG, KN, KP, KR, KZ, LA, LC, LK, LR, LS, LU, LY, MA, MD, ME, MG, MK, MN, MW, MX, MY, MZ, NA, NG, NI, NO, NZ, OM, PA, PE, PG, PH, PL, PT, QA, RO, RS, RU, RW, SA, SC, SD, SE, SG, SK, SL, SM, ST, SV, SY, TH, TJ, TM, TN, TR, TT, TZ, UA, UG, US, UZ, VC, VN, ZA, ZM, ZW.

(84) Designated States *(unless otherwise indicated, for every kind of regional protection available)*: ARIPO (BW, GH, GM, KE, LR, LS, MW, MZ, NA, RW, SD, SL, ST, SZ, TZ, UG, ZM, ZW), Eurasian (AM, AZ, BY, KG, KZ, RU, TJ, TM), European (AL, AT, BE, BG, CH, CY, CZ, DE, DK, EE, ES, FI, FR, GB, GR, HR, HU, IE, IS, IT, LT, LU, LV, MC, MK, MT, NL, NO, PL, PT, RO, RS, SE, SI, SK, SM, TR), OAPI (BF, BJ, CF, CG, CI, CM, GA, GN, GQ, GW, KM, ML, MR, NE, SN, TD, TG).

Published:

— *with international search report (Art. 21(3))*

— *with amended claims (Art. 19(1))*

[Continued on next page]

(54) Title: WEARABLE CHEMICAL DISPENSER

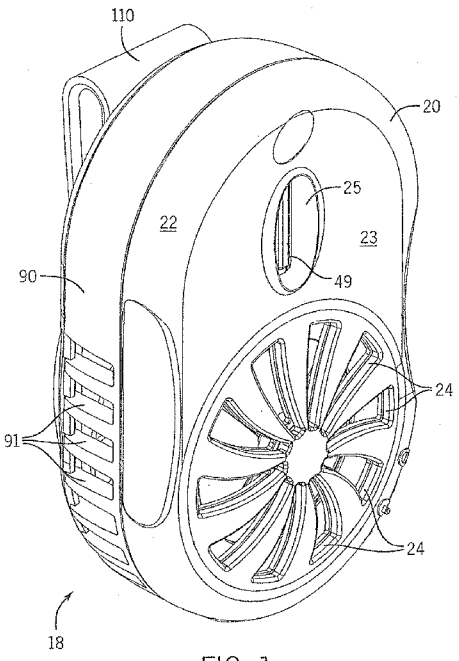

FIG. 1

(57) Abstract: Wearable devices for dispensing insect repellents, fragrances, and/or other chemicals along the outside of the clothing of a human are disclosed. They are of the type that are clipped onto a belt or the like, and use a powered fan to dispense active. They are configured with outlet arrangements to minimize power use while still achieving acceptable air flow rates. These changes permit use of smaller power supplies and more compact arrangements for power supply (e.g., battery) positioning. This in turn permits a much more compact and lightweight construction to achieve the desired results.

WO 2015/065822 A4

WO 2015/065822 A4

(88) **Date of publication of the international search report**: 2 July 2015

Date of publication of the amended claims: 6 August 2015

AMENDED CLAIMS
received by the International Bureau on 14 July 2015 (14.07.15).

1. A wearable device for dispensing an air treatment chemical, the device comprising:

a housing including an inlet for permitting air to enter into an interior space of the housing and including a plurality of spaced apart outlets for permitting air mixed with air treatment chemical to exit the interior space;

a substrate positioned within the housing, the substrate bearing an air treatment chemical;

a power supply mounted within a power supply compartment of the housing;

a motor mounted within the housing, the motor being powered by the power supply; and

a fan mounted within a fan compartment of the housing and connected to the motor, the fan being capable of moving air from the inlet adjacent the substrate so as to mix air treatment chemical into the moving air, and then deliver a mixture of air and air treatment chemical through the outlets to outside of the housing,

wherein the outlets are in fluid communication with the fan compartment of the housing, and

wherein the outlets comprise a first array of openings on a first side of a longitudinal axis of the housing and the outlets also comprise a second array of openings on an opposite second side of the longitudinal axis of the housing, the first array of openings and the second array of openings being non-symmetric about the longitudinal axis of the housing,

wherein the housing comprises a first side wall section on the first side of the longitudinal axis of the housing, a second side wall section on the second side of the longitudinal axis of the housing, a first end wall section connecting the first side wall section and the second side wall section, and a second end wall section connecting the first side wall section and the second side wall section,

wherein the first array of openings is located in the first side wall section and the first end wall section of the housing,

wherein the second array of openings is located in the second side wall section and the first end wall section of the housing,

wherein the fan compartment is defined by the first side wall section of the housing, the second side wall section of the housing, the first end wall section of the housing, and a partition wall between the fan compartment and the power supply compartment,

wherein a first end of the partition wall terminates at the first side wall section of the housing and an opposite second end of the partition wall terminates at the second end wall section of the housing,

wherein an included angle is defined by (i) a first location where the first end of the partition wall terminates at the first side wall section of the housing, (ii) a rotational axis of the fan, and (iii) a second location where the second end of the partition wall terminates at the second end wall section of the housing, and

wherein the included angle is less than 90 degrees.

2. The device of claim 1 wherein:

the first side wall section and the second side wall section of the housing are generally straight, and

the first end wall section and the second end wall section of the housing are generally curved.

3. The device of claim 1 wherein:

the first array of openings and the second array of openings are of generally uniform area.

4. The device of claim 1 wherein:

the fan compartment and the power supply compartment are in a side by side relationship coplanar with the longitudinal axis of the housing.

5. The device of claim 1 wherein:

the power supply compartment includes a recess for receiving the power supply, the recess having a major axis oriented at an oblique angle to the longitudinal axis of the housing.

6. The device of claim 5 wherein:
the power supply is a single AA sized battery, and
the recess is dimensioned to receive the battery.

7. The device of claim 1 wherein:
the mixture of air and air treatment chemical delivered through the outlets to outside of the housing has an ejection angle of greater than 270 degrees.

8. A wearable device for dispensing an air treatment chemical, the device comprising:

a housing including an inlet for permitting air to enter into an interior space of the housing and including a plurality of spaced apart outlets for permitting air mixed with air treatment chemical to exit the interior space;

a substrate positioned within the housing, the substrate bearing an air treatment chemical;

a power supply mounted within a power supply compartment of the housing;

a motor mounted within the housing, the motor being powered by the power supply; and

a fan mounted within a fan compartment of the housing and connected to the motor, the fan being capable of moving air from the inlet adjacent the substrate so as to mix air treatment chemical into the moving air, and then deliver a mixture of air and air treatment chemical through the outlets to outside of the housing,

wherein the outlets are in fluid communication with the fan compartment of the housing, and

wherein the power supply compartment includes a recess for receiving the power supply, the recess having a major axis oriented at an oblique angle to a longitudinal axis of the housing.

9. The device of claim 8 wherein:

the power supply is a single AA sized battery, and

the recess is dimensioned to receive the battery.

10. The device of claim 9 wherein:

the device can maintain an average volumetric flow rate of air of at least 1.5 cubic feet per minute over a twelve hour period.

11. The device of claim 8 wherein:

the mixture of air and air treatment chemical delivered through the outlets to outside of the housing has an ejection angle of greater than 270 degrees.

12. The device of claim 8 wherein:

the fan compartment is defined by the first side wall section of the housing, the second side wall section of the housing, the first end wall section of the housing, and a partition wall between the fan compartment and the power supply compartment, and

a first end of the partition wall terminates at the first side wall section of the housing and an opposite second end of the partition wall terminates at the second end wall section of the housing,

an included angle is formed by (i) a first location where the first end of the partition wall terminates at the first side wall section of the housing, (ii) a rotational axis of the fan, and (iii) a second location where the second end of the partition wall terminates at the second end wall section of the housing, and

the included angle is less than 90 degrees.

13. A wearable device for dispensing an air treatment chemical, the device comprising:

a housing including an inlet for permitting air to enter into an interior space of the housing and including a plurality of spaced apart outlets for permitting air mixed with air treatment chemical to exit the interior space;

a substrate positioned within the housing, the substrate bearing an air treatment chemical;

a power supply mounted within a power supply compartment of the housing;

a motor mounted within the housing, the motor being powered by the power supply; and

a fan mounted within a fan compartment of the housing and connected to the motor, the fan being capable of moving air from the inlet adjacent the substrate so as to mix air treatment chemical into the moving air, and then deliver a mixture of air and air treatment chemical through the outlets to outside of the housing,

wherein the fan compartment is defined by a first side wall section of the housing, a second side wall section of the housing, an end wall section of the housing, and a partition wall between the fan compartment and the power supply compartment,

wherein the outlets comprise openings in the first side wall section of the housing and the second side wall section of the housing, the openings being in fluid communication with the fan compartment of the housing, and

wherein the partition wall is dimensioned such that the fan compartment is in fluid communication with an additional number of openings in the second side wall section of the housing compared to the first side wall section of the housing.

14. The device of claim 13 wherein:

the partition wall is a straight wall oriented at an oblique angle to a longitudinal axis of the housing.

15. The device of claim 14 wherein:

the power supply compartment includes a recess for receiving the power supply, the recess having a major axis oriented at the oblique angle to the longitudinal axis of the housing.

16. The device of claim 13 wherein:

a first end of the partition wall terminates at the first side wall section of the housing and an opposite second end of the partition wall terminates at the second end wall section of the housing,

an included angle is defined by (i) a first location where the first end of the partition wall terminates at the first side wall section of the housing, (ii) a rotational axis of the fan, and (iii) a second location where the second end of the partition wall terminates at the second end wall section of the housing, and

the included angle is less than 90 degrees.

17. The device of claim 13 wherein:

the mixture of air and air treatment chemical delivered through the outlets to outside of the housing has an ejection angle of greater than 270 degrees.