Office de la Propriété Intellectuelle du Canada
Un organisme d'Industrie Canada

Canadian Intellectual Property Office
An agency of Industry Canada

CA 2218025 C 2005/06/07

(11)(21) 2 218 025

(12) BREVET CANADIEN
CANADIAN PATENT

(13) C

(86) Date de dépôt PCT/PCT Filing Date: 1996/04/12
(87) Date publication PCT/PCT Publication Date: 1996/10/17
(45) Date de délivrance/Issue Date: 2005/06/07
(85) Entrée phase nationale/National Entry: 1997/10/10
(86) N° demande PCT/PCT Application No.: AU 1996/000221
(87) N° publication PCT/PCT Publication No.: 1996/032719
(30) Priorité/Priority: 1995/04/13 (PN2396) AU

(51) Cl.Int.^{6}/Int.Cl.^{6} B65D 85/57, G11B 23/03

(72) Inventeur/Inventor:
MCEWAN, STURT, AU

(73) Propriétaire/Owner:
DURADISC PTY. LIMITED, AU

(74) Agent: ADAMS, THOMAS

(54) Titre : BOITIER DE DISQUE COMPACT
(54) Title: COMPACT DISC CASE

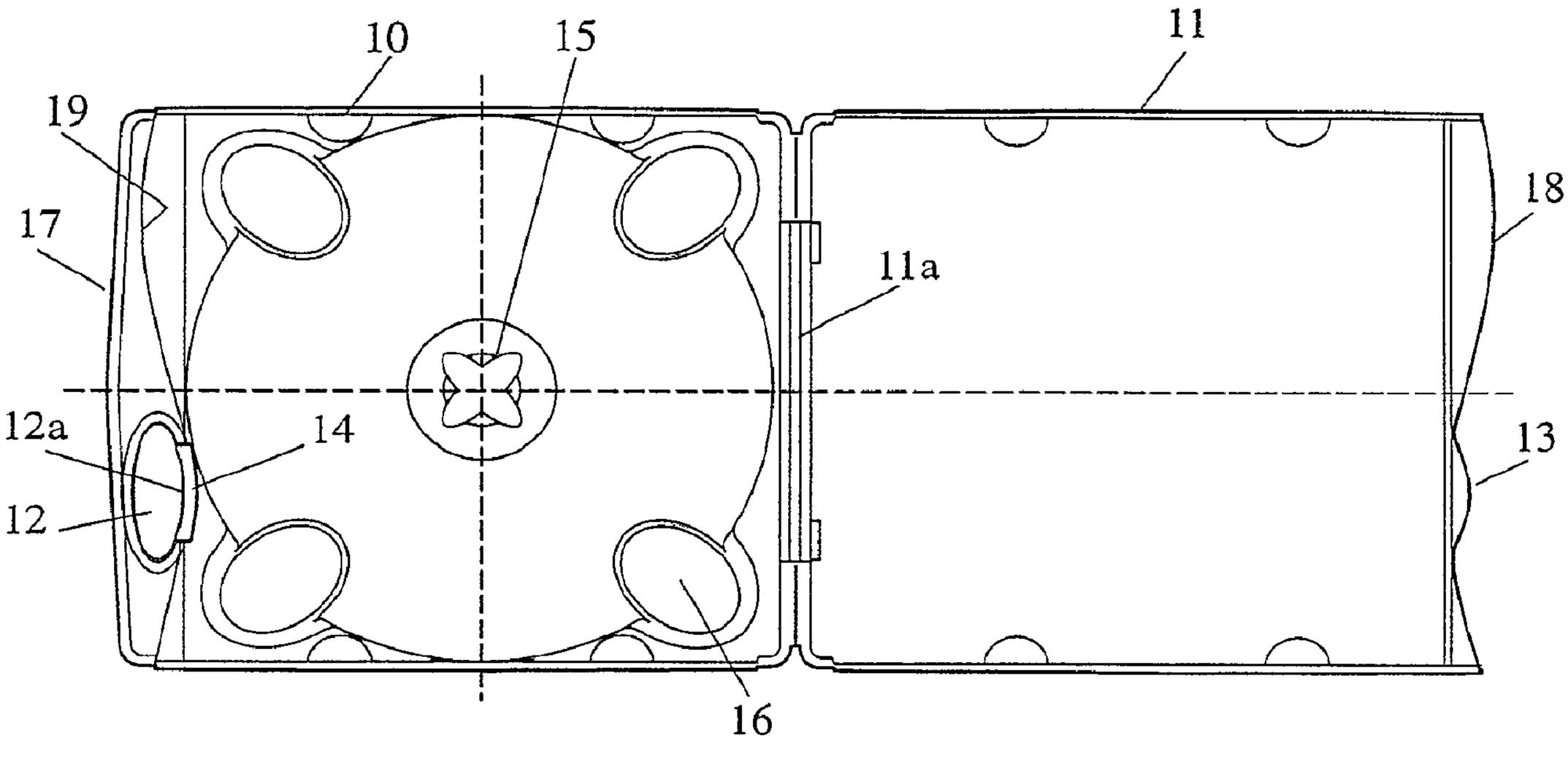

(57) Abrégé/Abstract:
This invention provides an improved compact disc case or the like comprising two hinged parts (10, 11) adapted to be closed to house a compact disc or like article wherein the hinged parts are held closed by a catch including a button part (12) on one of the parts adapted to interact with the other part to form a latch, the button part (12) being formed integrally with said one part and resiliently mounted to latch and unlatch in a snap-fit action. The case preferably includes a biasing element (14) interacting between the two hinged parts (10, 11) and acting to bias the two hinged parts apart. The case also preferably includes at least one edge surface (17) curved along a relatively large radius of curvature to avoid light reflection and enable easy reading of information located along or adjacent said curved edge.

PCT WORLD INTELLECTUAL PROPERTY ORGANIZATION
International Bureau

INTERNATIONAL APPLICATION PUBLISHED UNDER THE PATENT COOPERATION TREATY (PCT)

(51) International Patent Classification 6 : G11B 23/03, B65D 85/57	A1	(11) International Publication Number: WO 96/32719
		(43) International Publication Date: 17 October 1996 (17.10.96)

(21) International Application Number: PCT/AU96/00221

(22) International Filing Date: 12 April 1996 (12.04.96)

(30) Priority Data:
PN 2396 13 April 1995 (13.04.95) AU

(71) Applicant *(for all designated States except US)*: DURADISC PTY. LIMITED [AU/AU]; Level 3, 190 George Street, Sydney, NSW 2000 (AU).

(72) Inventor; and
(75) Inventor/Applicant *(for US only)*: McEWAN, Sturt [AU/AU]; 39 Ellalong Road, Cremorne, NSW 2090 (AU).

(74) Agent: WATERMARK; Level 4, Amory Gardens, 2 Cavill Avenue, Ashfield, NSW 2131 (AU).

(81) Designated States: AL, AM, AT, AU, AZ, BB, BG, BR, BY, CA, CH, CN, CZ, DE, DK, EE, ES, FI, GB, GE, HU, IS, JP, KE, KG, KP, KR, KZ, LK, LR, LS, LT, LU, LV, MD, MG, MK, MN, MW, MX, NO, NZ, PL, PT, RO, RU, SD, SE, SG, SI, SK, TJ, TM, TR, TT, UA, UG, US, UZ, VN, ARIPO patent (KE, LS, MW, SD, SZ, UG), Eurasian patent (AM, AZ, BY, KG, KZ, MD, RU, TJ, TM), European patent (AT, BE, CH, DE, DK, ES, FI, FR, GB, GR, IE, IT, LU, MC, NL, PT, SE), OAPI patent (BF, BJ, CF, CG, CI, CM, GA, GN, ML, MR, NE, SN, TD, TG).

Published
With international search report.

(54) Title: COMPACT DISC CASE

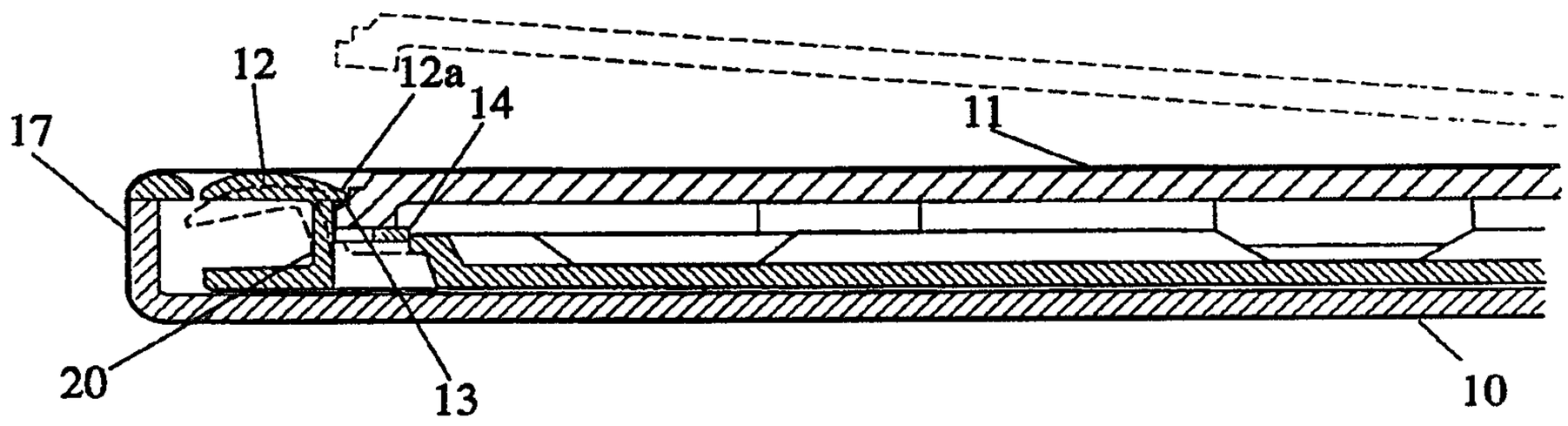

(57) Abstract

This invention provides an improved compact disc case or the like comprising two hinged parts (10, 11) adapted to be closed to house a compact disc or like article wherein the hinged parts are held closed by a catch including a button part (12) on one of the parts adapted to interact with the other part to form a latch, the button part (12) being formed integrally with said one part and resiliently mounted to latch and unlatch in a snap-fit action. The case preferably includes a biasing element (14) interacting between the two hinged parts (10, 11) and acting to bias the two hinged parts apart. The case also preferably includes at least one edge surface (17) curved along a relatively large radius of curvature to avoid light reflection and enable easy reading of information located along or adjacent said curved edge.

COMPACT DISC CASE

Technical Field

The present invention relates to a compact disc case which conventionally comprises a clear plastic case (polycarbonate plastic or the like) made with two hinged halves and being closable with a simple latching arrangement.

Background Art

It has been found that problems can occur with the conventional compact disc case.

One problem which is commonly experienced is that of the latch for holding the two hinged halves of the case in the closed position becoming inoperative over time. The latch becomes subject to wear or breakage over a period of usage, subsequently leading to accidental and unwanted opening of the case.

A further problem experienced with conventional compact disc cases is that information located along an edge surface forming the spine of the case is sometimes difficult to read in certain lighting conditions. Typically the spine of the case displays information regarding the nature of the compact disc contained within and in certain lighting conditions this information can prove difficult to read.

It is therefore an object of the present invention is to provide an improved novel compact disc case which will alleviate some of the problems of the prior art.

Summary of the Invention

One aspect of the present invention provides a catch mechanism for a compact disc case or the like, said case comprising two hinged parts adapted to house a compact disc or like article,

said catch mechanism adapted to hold said hinged parts in a closed position and including a button on one of the hinged parts adapted to interact with the other hinged part to form a latch, said button being formed integrally with said one hinged part and resiliently mounted to latch in a snap-fit action

with the other hinged part, said button adapted such that it can be depressed by a user to unlatch the two hinged parts and thereby open the case.

The present invention also provides a compact disc case or the like, said case comprising two hinged parts adapted to house a compact disc or like article and a catch mechanism adapted to hold said hinged parts in a closed position,

said catch mechanism including a button on one of the hinged parts adapted to interact with the other hinged part to form a latch, said button being formed integrally with said one hinged part and resiliently mounted to latch in a snap-fit action with the other hinged part, said button adapted such that it can be depressed by a user to unlatch the two hinged parts and thereby open the case.

Preferably the button part is adapted such that it can be depressed by the finger of a user to unlatch the two hinged parts so as to open the case.

Preferably the button part includes a ledge adapted to act upon a surface of the second hinged part to provide the latch.

Preferably the present invention includes a biasing element interacting between the two hinged parts and acting to bias the two hinged parts apart. It is further preferable that the biasing element is formed integrally on one of the said hinged parts. Preferably the biasing element is formed integrally on the same hinged part as the button part.

In a further aspect of the present invention at least one edge surface of the case is curved along a relatively large radius of curvature to avoid light reflection and enable easy reading of information located along or adjacent said curved edge.

Brief Description of Drawings

The preferred features of the present invention will be described in greater detail with reference to the accompanying drawings in which:-

Fig. 1 is a plan view of a compact disc case according to the present invention with the hinged parts of the case in an open position.

Fig. 2 is a sectional view through the compact disc case with the hinged parts closed;

PCT/AU 96/00221
RECEIVED 29 JAN 1997

Fig. 3 is a plan view of one corner of the compact disc case illustrating features of the catch mechanism and the compact disc support area; and

Fig. 4 is a perspective view from above the closed case.

Detailed Description of Preferred Embodiment

Referring to Fig. 1 of the drawings, a preferred embodiment of the compact disc case is depicted in an open position. The case comprises hinged parts 10 and 11 preferably hinged by a plastic hinge 11a. The hinge 11a may be formed by integral parts of each of the hinged parts 10, 11 or alternatively the hinge 11a may be separate from the hinged parts 10, 11.

Referring to Figs. 1 and 3, the case is fitted with a centrally mounted spindle 15 for locating a compact disc or similar article in the known manner. Furthermore the surface of the hinged part 10 is formed with indentations 16 located to allow entry of the fingers to pick up the edge of the compact disc for ease of removal from the case.

Referring to Fig. 2, the hinged part 10 includes a button portion 12 mounted on a stem 20. The button portion 12 is sized and shaped so that it may be pressed by a finger of a user. The button portion 12 has a cantilever-type mounting on stem 20 such that upon the application of a force by the finger of the user against the surface of the button 12 the stem 20 will slightly deform and move the button away from the corresponding catch portion 13 on the hinged part 11. The range of movement of the button 12 caused by the deflection of stem 20 is illustrated in dotted outline.

The button 12 includes a ledge 12a which is adapted to interact with the surface of the catch portion 13 on hinged part 11. In the closed position depicted, the ledge 12a of the button interacts with the surface of the catch portion 13 to hold the case closed.

To augment the opening of the two parts 10 and 11 when the button 12 is depressed to release the catch, a resilient biasing element 14 acts to move the hinged part 11 upwardly away from the latched position. The biasing element 14 is preferably formed integrally with the button member 12.

Therefore upon depressing the button 12 the catch is released and the hinged part 11 springs open under the action of the biasing element 14.

AMENDED SHEET
IPEA/AU

Referring to Fig. 2 the hinged part 11 is shown in broken line in the unlatched position.

Referring to Fig. 4, an edge surface 17 of the case is formed with a curved surface having relatively large radius of curvature to avoid unwanted light reflection and thereby enabling easy reading of information as to the content of the compact disc or like article when the case is stored in a library or storage area. In the embodiment depicted, the surface 17 is the edge surface of the free, unhinged end of part 10 of the case. It should be noted however that the surface 17 may be formed on either the unhinged or hinged ends of either part 10 or 11 of the case.

The matching edges 18 and 19 of the hinged portions as shown Fig. 3 are formed with a neat curve formation to improve the aesthetic appearance of the case. When closed, the edge 18 lies adjacent the edge 19 to provide a smooth outer surface.

AMENDED SHEET
IPEA/AU

CLAIMS:

1. A storage case for a disc-shaped information carrier, said case comprising:

two hinged parts adapted to house said disc-shaped information carrier, one of the said hinged parts defining a base which includes a spindle on which the disc-shaped information carrier may be mounted, the other said hinged part defining a lid, the lid defining a generally planar surface;

a catch mechanism on the base, said catch mechanism used for latching the lid to the base by holding said hinged parts in a closed position;

a retaining member on the inner surface of the lid;

a button integral to said catch mechanism for unlatching the retaining member in response to a force or depression of said button, the button having a ledge for engaging the retaining member, thereby latching the lid to the base in a snap fit action; and

biasing means between the lid and base, said biasing means exerting a force against the lid and base respectively when the case is in a closed position, thereby opening the case when the lid is unlatched by depression of said button.

2. A case according to claim 1, wherein the button is reasonably sized for depression by a finger of a user.

3. A case according to claim 1 or 2, wherein the button is mounted on a stem such that upon application of a force to the button by a finger of a user the stem deflects, thereby disengaging said ledge from said retaining member and unlatching the two hinged parts.

4. A case according to any preceding claim, wherein at least one edge surface of the case is curved to reduce light reflection and enable easy reading of information located along or adjacent said curved edge.

5. A case according to claim 4, wherein the said at least one edge surface is an edge surface of a free, unhinged end of part of the case.

6. A case according to any preceding claim, wherein the catch mechanism is proximate the edge of said case that is opposite the edge whereat said two hinged parts are joined by a hinge.

7. A case according to any preceding claim, wherein the biasing means is formed integrally on the lid.

8. A case according to any one of claims 1 to 7, wherein the biasing means is formed integrally on the base.

9. A case according to any preceding claim, wherein the biasing means is proximate said retaining member when the lid is closed.

10. A case according to any preceding claim, wherein the ledge on said button is oriented to engage the retaining member on the lid as said hinged parts are swivelled shut.

11. A case according to claim 3, wherein the biasing means is formed integrally on the base below and proximate to said catch mechanism.

12. A case according to claim 1, wherein the surface of the button does not extend above the surface of the lid when the case is closed.

13. A case according to any preceding claim, wherein said button is recessed so that the upper surface of the button does not project beyond the planar surface of the lid when the case is closed.

14. A compact disc case comprising:

two hinged parts adapted to house a compact disc one of the said hinged parts defining a base which includes a spindle on which a compact disc may be mounted and the other said hinged part defining a lid;

a retaining member on the inner surface of one of the hinged parts;

a catch mechanism including a button formed integrally with one of the said hinged parts and resiliently mounted to latch in a snap-fit action with the retaining member on the other hinged part, the button defining an upper surface to be pressed, wherein the surface of the button is generally aligned with the surface of the lid when the case is closed, thereby allowing a user to

unlatch the lid from the base by depressing said button with the touch of a finger; and

a biasing element which is disposed between the two hinged parts and acts to bias the two hinged parts apart, said button to be depressed by a user to unlatch the two hinged parts, the biasing element thereby opening the case.

15. A case according to claim 14, wherein the button includes a ledge for engaging the retaining member thereby latching the lid to the base in said snap-fit action.

16. A case for a compact disc, said case comprising:

two hinged parts adapted to house a compact disc, one of the said hinged parts defining a base which includes a spindle on which the compact disc may be mounted and the other said hinged part defining a lid;

a retaining member on the inside surface of one of the hinged parts;

a catch mechanism to hold said hinged parts in a closed position, said catch mechanism including a button on one of the hinged parts to engage the retaining member on the other hinged part, said catch mechanism being resiliently mounted on a stem to latch in a snap-fit action with said retaining member, said button to be depressed by a user's fingers to unlatch the two hinged parts; and

a resilient biasing element acting to bias the two hinged parts apart and thereby open the case when said catch mechanism is unlatched.

17. A case according to claim 16, wherein the lid defines a generally planar surface, the button defines an upper surface to be pressed and wherein the button is recessed so that the upper surface of the button is aligned with and does not project beyond the planar surface of the lid when the case is closed.

18. A storage case for a disc-shaped information carrier, such as a compact disc, said case comprising:

two hinged parts adapted to house a disc-shaped information carrier, one of the said hinged parts defining a base which includes a spindle on which the disc-shaped information carrier may be mounted and the other said hinged part defining a lid, the lid defining a generally planar surface;

a catch mechanism adapted to hold said hinged parts in a closed position, said catch mechanism including a button on the base, said button

being adapted to interact with the lid to form a latch, said button being formed integrally with said base, being recessed so that it does not project substantially beyond the planar surface of the lid when the case is closed and being resiliently mounted to latch in a snap-fit action with the lid; and

biasing means formed on the base for biasing the base and lid apart, said button being adapted such that it can be depressed by a user to unlatch the two hinged parts so that the biasing means cause the case to open.

PCT/AU 96/00221
RECEIVED
96-032
DURADISC.
PCT.

Fig 1.

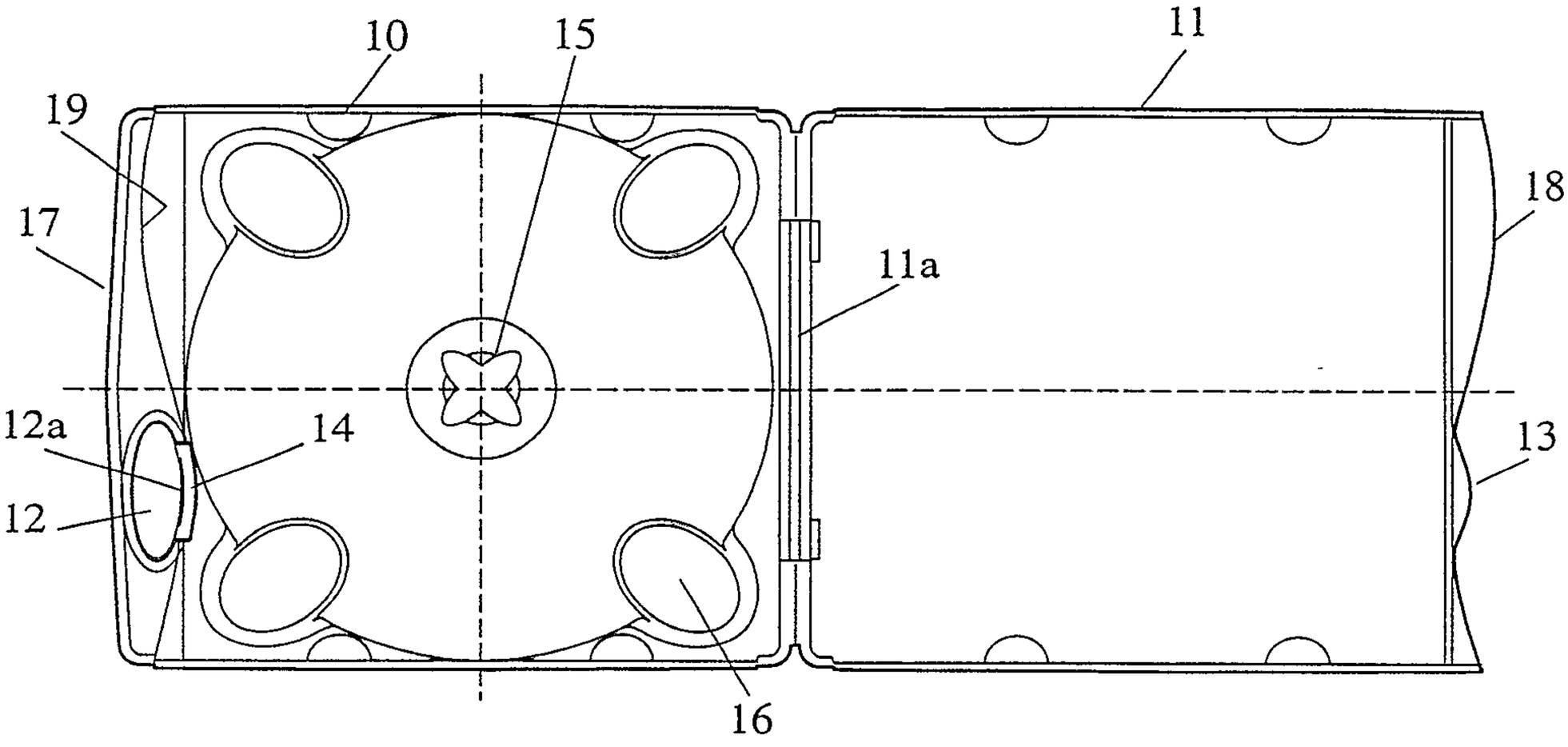

Fig 2.

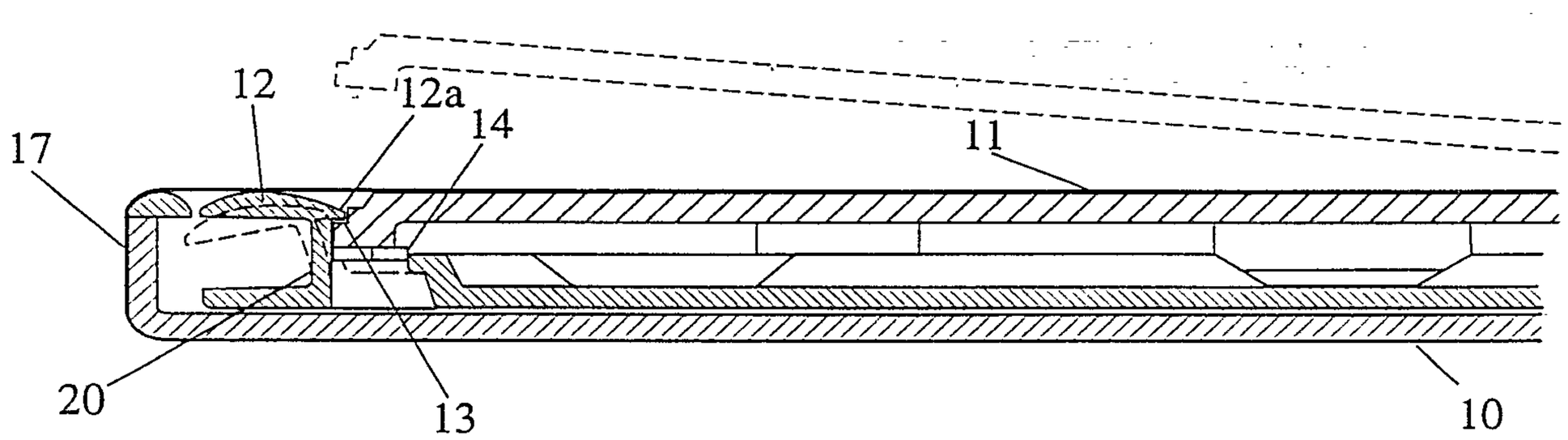

AMENDED SHEET
IPEA/AU

PCT/AU 96/00221

RECEIVED 29 JAN 1997

Fig 3.

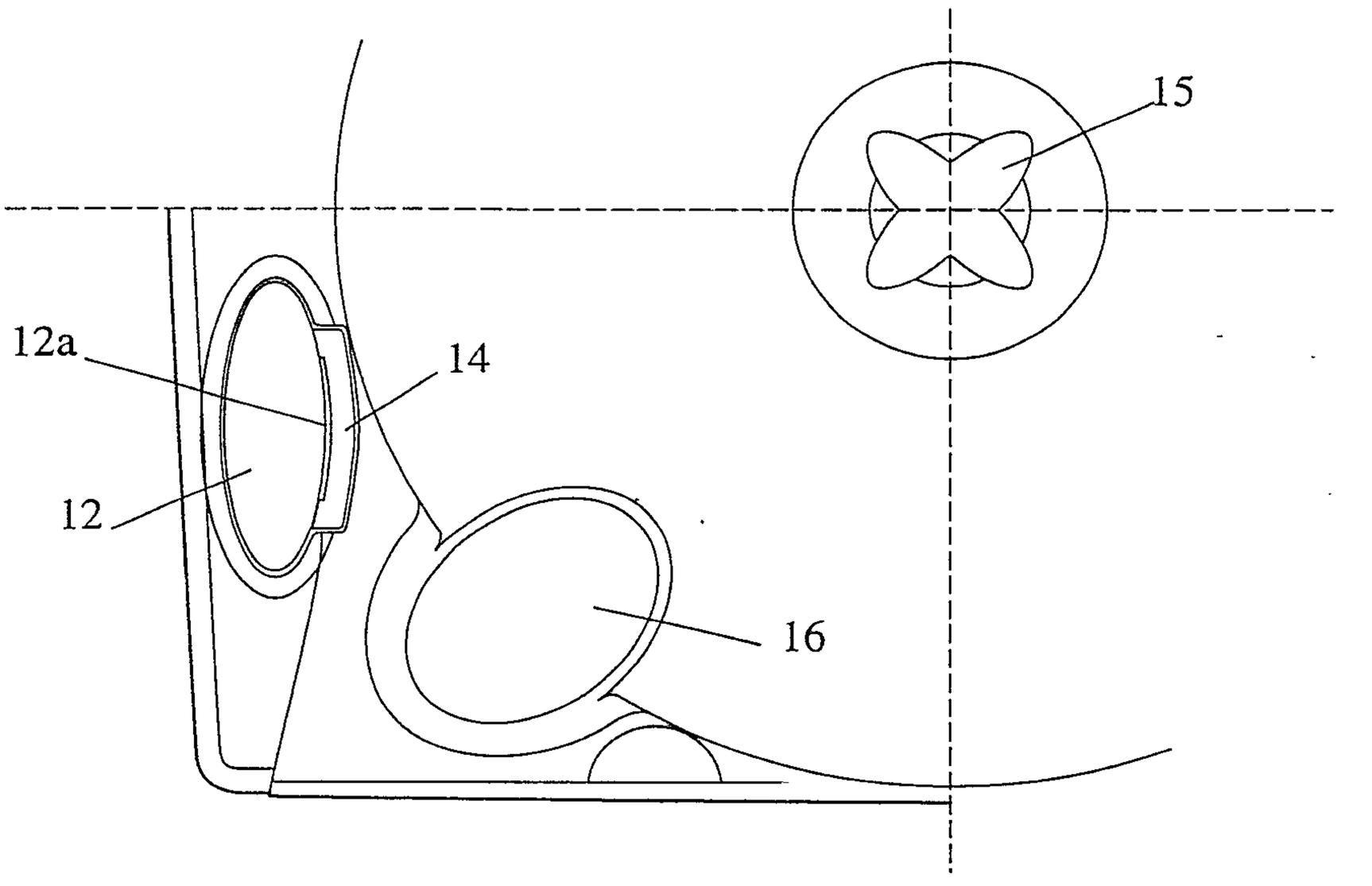

Fig 4.

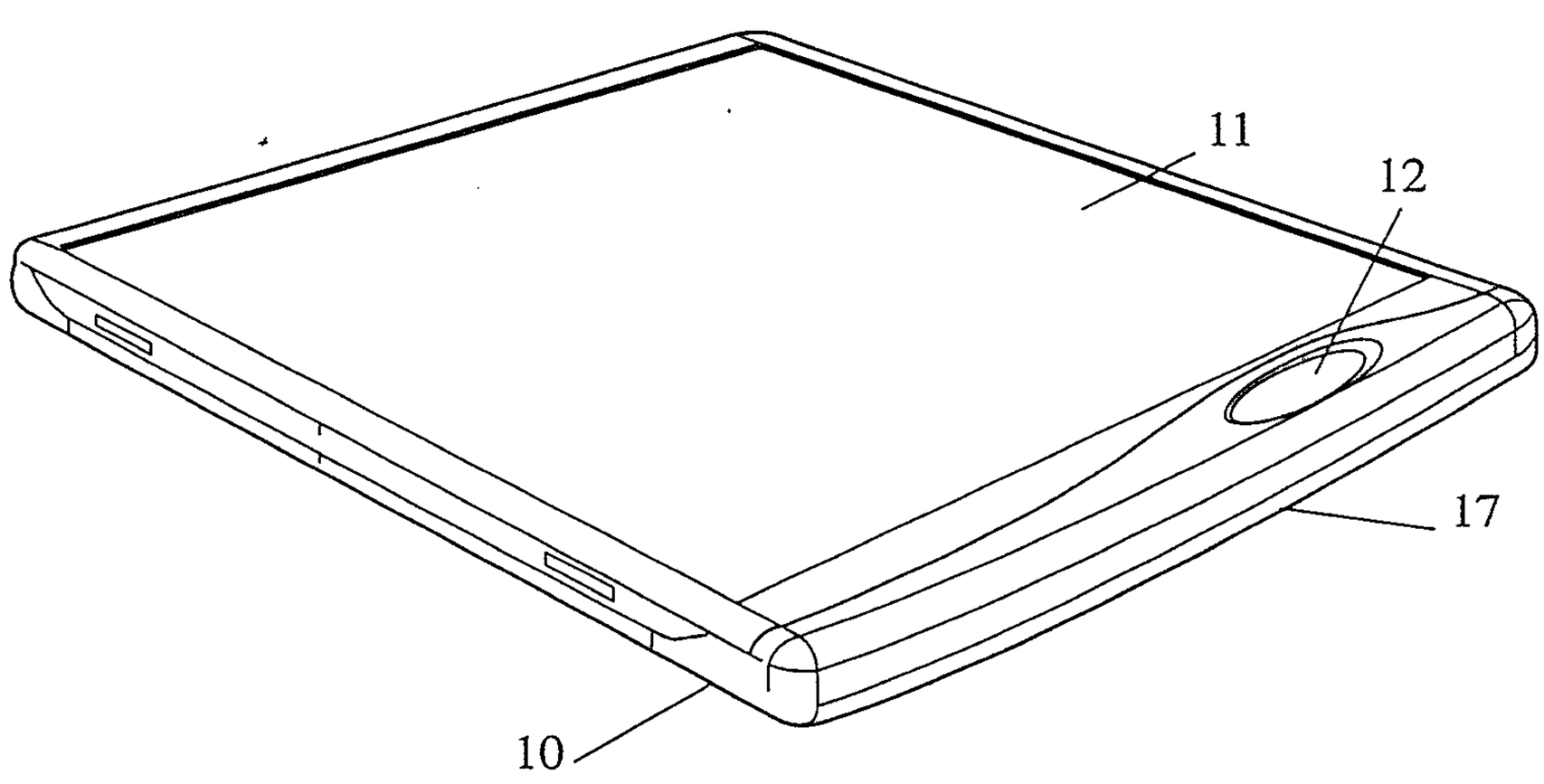

AMENDED SHEET
IPEA/AU

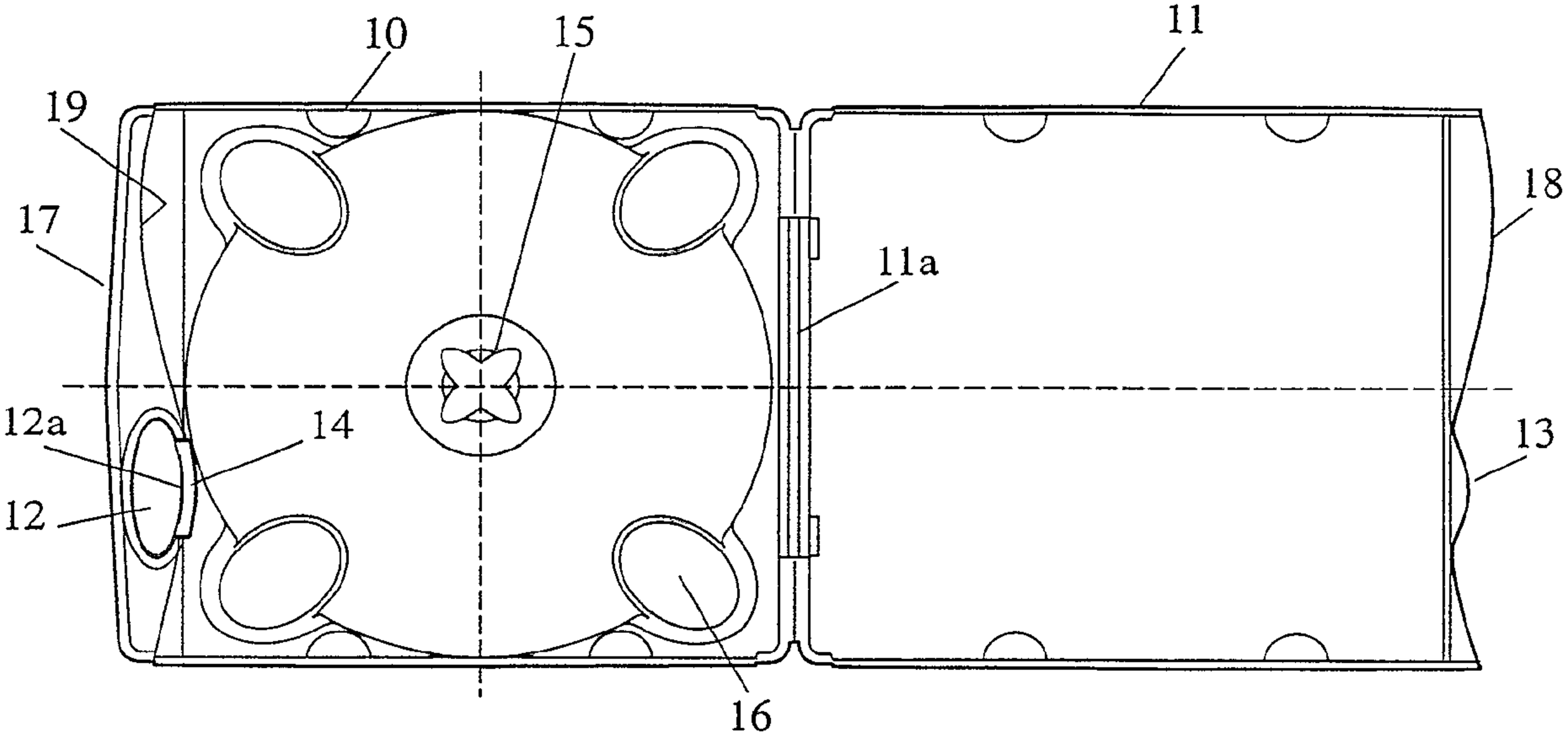
10
15
11
19
18
17
11a
12a
14
13
12
16