Jan. 5, 1965 A. HAUSCHOPP ETAL 3,164,412

PLANAR HAVING PIVOTALLY MOUNTED SIDE PLATES

Filed Feb. 14, 1962

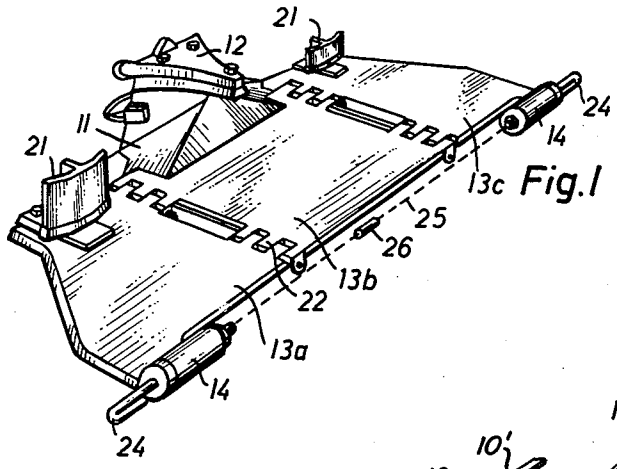

Fig.1

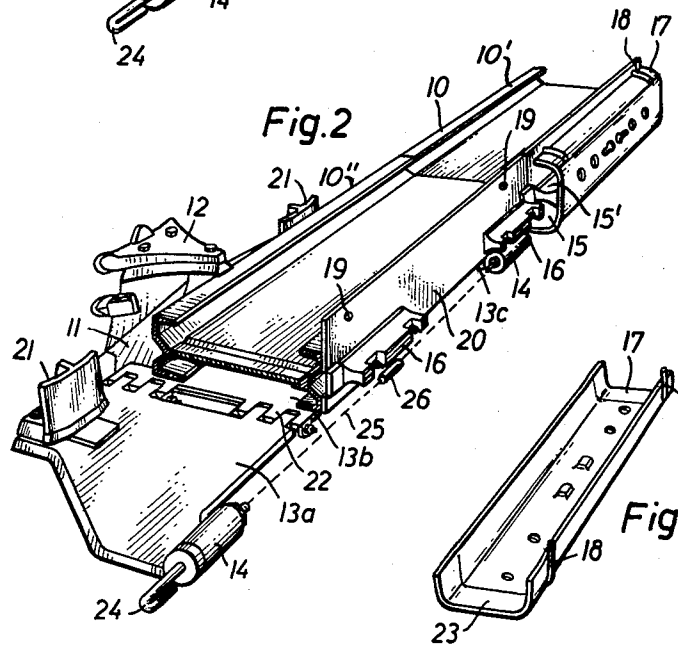

Fig.2

Fig.3

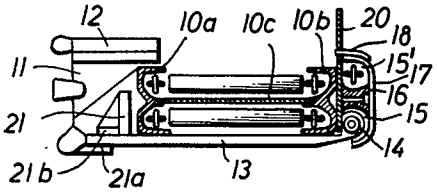

Fig.4

INVENTORS
ALOIS HAUSCHOPP
WULFF ROSLER

BY
Burgess Dunbloge and Strong
ATTORNEYS

United States Patent Office 3,164,412 Patented Jan. 5, 1965

3,164,412

PLANER HAVING PIVOTALLY MOUNTED SIDE PLATES

Alois Hauschopp, Werne an der Lippe, and Wulff Rösler, Altlunen, Germany, assignors to Gewerkschaft Eisenhütte Westfalia, Wethmar, near Lunen, Westphalia, Germany, a German corporation

Filed Feb. 14, 1962, Ser. No. 173,260
12 Claims. (Cl. 299—34)

The present invention relates to a planer arrangement adapted to be conducted in even and uneven horizontal direction along a mine face for extraction of mineral, such as coal, therefrom by engagement of the planer therewith, and more particularly to such an arrangement used with a conducting rail means, such as a conveyor, disposed thereover for traveling engagement of the planer arrangement therewith during passage of the planer arrangement along the mine face.

Various planer arrangements for the extraction of minerals such as coal are known, and these are most often used in connection with conveyor arrangements for the removal of the extracted mineral from the site of extraction operations. The planer is pulled along the mine face by a traction mechanism, usually in the form of a cable looped over appropriate driving wheels spaced apart along the mine face, the ends of the cable being connected to the planer, whereby upon movement of the cable in one direction, the planer arrangement will travel therewith, and upon movement in the other direction, the planer arrangement will travel in reverse direction.

Where irregular or undulating low-thickness or thin coal seams are encountered in the extraction operation, difficulties arise since the planer which is driven by the cable at the side remote from the mine face is unable to cleanly separate or extract coal from the horizontal seam, in spite of the fact that a strut plate connected to the planer extends under the conveyor for maximum leverage. In particular, in wavy or undulating thin coal seams, the coal frequently remained in place in the horizontal seam, after the planer had passed in engagement with the mine face, while the planer was able to cut into the overhead or hanging seam within the range of the planer cutting means during a wave peak of the uneven mine course.

In order to overcome these difficulties a strut plate construction was developed which was either very short in the longitudinal direction of the conveyor or very long, in the latter instance, the strut plate arrangement having a hinged subdivision. However, these proposals were not successful in practice since, on the one hand, with a short or narrow strut plate besides the excess stresses to which said narrow construction is exposed, the desired extraction activity of the planer is offset due to the lack of stability and leverage of the narrow strut plate in longitudinal direction upon encountering the mine face, while on the other hand, with a single hinged subdivision for the strut plate, the symmetry of the strut plate is sacrificed and insufficient guidance against displacement out of the longitudinal direction is experienced, whereby the strut plate likewise cannot follow the wavy or undulating horizontal seam with effectiveness and yet extract the coal from the mine face properly. Of course, since the planer element itself is centered on the strut plate to obtain the optimum extraction leverage with the mine face, the hinged connection cannot be placed precisely at such center and therefore the hinged arrangement cannot follow properly the wavy horizontal seam.

It is an object of the present invention to overcome the foregoing drawbacks and to provide a planer arrangement with which it is possible to follow the course of the curves of wavy or undulating horizontal seams, especially thin

seams of coal, such that the traction mechanism or traction cable for pulling the planer is disposed on the side of the conveyor, used in connection with the planer arrangement, remote from the mine face.

Other and further objects of the invention will become apparent from a study of the within specification and accompanying drawings.

It has been found in accordance with the present invention that a particularly advantageous planer arrangement may be provided which is adapted to be conducted in even and uneven horizontal direction along a mine face for extraction of mineral therefrom by engagement of the planer therewith. The arrangement specifically comprises a planer plate having a planer situated thereon for extractive engagement with a mine face, a first side plate and a second side plate attached flexibly to opposite sides respectively of said planer plate, and means defining guide bearings on said first and second side plates, said plates and guide bearing means together defining a guiding channel for traveling engagment with a conducting rail means disposed thereover for travel along the mine face, in even and uneven horizontal direction depending on the nature of the mine seam using a traction mechanism or traction cable for pulling the planer which is disposed on the side of the conveyor remote from the mine face, with the planer in extractive engagement with the mine face without deviation of the planer from the normal position of travel even under the resistance of the mine face to said planer.

The guide bearing means may include a runner and an opposing traction slide on each side plate, correspondingly positioned on opposite sides of the guiding channel to define respective portions of the guiding channel with the corresponding plates.

Preferably, the side plates are hingedly connected to the planer plate forming a trapezoid shaped guiding surface, having a shorter rear edge and a longer front edge substantially parallel to the rear edge. In this case, the runners and planer are positioned on the trapezoid shaped guiding surface along the shorter rear edge while the traction slides are positioned thereon along the longer front edge so as to define therebetween the guiding channel. A projection inwardly extending over a portion of the guiding channel is provided on the planer in order to define the upward limit of the guiding channel with respect to traveling engagement with the conducting rail means. On the other hand, the trapezoid shaped guiding surface defines the lower limit of the guiding channel.

In accordance with the preferred embodiment of the invention, each runner is positioned on the respective side plate at the corresponding rear edge corner portion of the trapezoid shaped guiding surface, while each traction slide is positioned on the respective side plate at the corresponding front edge corner portion of the guiding surface, the distance between the traction slides being greater than the distance between the runners. Significantly, the runners are substantially equidistantly spaced from the planer and the traction slides are substantially equidistantly spaced from the planer as well. A traction reinforcing means is provided to interconnect the traction slides, whereby to take up tractive forces exerted on the planer arrangement, and otherwise exerted on the hinge connections of the side plates and the planer plate, such tractive forces being exerted in the normal manner for conducting the planer along the mine face in extractive engagement therewith.

Specifically, a traction cable means may be employed which is correspondingly connected to the traction slides for conducting under tractive force the planer arrangement in both directions of travel, respectively, along the mine face.

A specific constructional feature of the invention con-

templates providing each runner as an upstanding bearing lug adapted to carry an auxiliary cutter thereon for engagement with the mine face. In the same way, each traction slide is provided as a cylindrical bearing block extending in the direction of the front edge of the trapezoid shaped guiding surface and outwardly thereof, the cylindrical blocks being interconnected by said traction reinforcing means. Each block is conveniently provided with attachment means for corresponding attachment with the particular end of the traction cable means.

An efficient combination may be provided where the planer arrangement of the invention is used with a particular type of rail conducting means. Specifically, the conducting rail means is preferably defined by a longitudinal conveyor for removing extracted mineral. Such conveyors are well known and most often take the form of a double chain scraper conveyor wherein a pair of parellel endless chains interconnected by spaced scraper bars is provided, so that extracted mineral will be scraped along the conveyor by the bars in the desired direction.

In accordance with the preferred combination of the invention, the conveyor is provided with a rear longitudinal rail and a front longitudinal rail interconnected by a central conveyor floor. The conveyor is disposed with respect to the planer arrangements such that the rear rail of the conveyor is in sliding engagement with the bearing lugs or runners of the planer arrangements with the conveyor being upwardly limited by the projection on the planer which inwardly extends over the guiding channel portion of the planer arrangement within which the conveyor is received. Both rails are placed in sliding engagement with the plates thereunder, in this embodiment, and the front rail of the conveyor is disposed in sliding engagement with the cylindrical blocks or traction slides on the side plates.

With respect to a particular feature of the conveyor construction, the front rail, which, of course, is remote from the mine face against which extend the cutters of the planer, is provided with an upwardly extending shield plate to prevent overflow of mineral from the conveyor. As is known, when the planer engages the mine face while riding along the conveyor adjacent thereto, the mineral which is extracted is directed onto the conveyor therebelow for removal from the site of operations. During the passage of mineral onto the conveyor, it is possible that a certain amount thereof will overflow the front rail of the conveyor remote from the mine face. The shield plate will prevent this from happening. Furthermore, groove means are disposed on the outer side of the shield plate for sliding engagement with the cylindrical blocks or traction slides of the planer arrangement. Conveniently, the groove means may include a lower groove for engagement with the cylindrical blocks or traction slides and for passage therealong of the traction cable means connected to the blocks or slides, as well as an upper groove for the return portion of the traction cable means. As a safety measure and in order to prevent mineral from lodging between the moving traction cable means and the stationary conveyor, channel plates may be disposed on the shield plate and connected to the groove means for covering the grooves and moving elements therewithin.

In the accompanying drawings:

FIG. 1 is a schematic perspective view of the planer arrangement in accordance with the invention having a central plate and opposing side plates for insertion under the conveyor in connection with which the planer arrangement is used,

FIG. 2 is a schematic perspective view of the planer arrangement of FIG. 1 shown in positional relationship with the conveyor which is indicated partially in section,

FIG. 3 is a schematic sectional view of a channel plate used for covering a portion of the planer arrangement and traction cable means on the side of the conveyor remote from the mine face, and

FIG. 4 is a schematic end view partially in section of the arrangement of FIG. 2.

Referring to the drawing, FIG. 1 shows a planer 11 having a cutter carrier 12 disposed thereon including a portion projecting inwardly over central plate 13*b* upon which planer 11 is situated. On either side of central plate 13*b*, an appropriate side plate 13*a* and 13*c* is situated, plates 13*a* and 13*c* being connected to central plate 13*b* by hinge means 22. While central plate 13*b* is more or less rectangular in shape, side plates 13*a* and 13*c* are shorter along the edge thereof adjacent to planer 11 and longer at their edge remote therefrom. Plates 13*a* 13*b* and 13*c*, together, form in tandem, a longitudinal guiding surface which is trapezoid-shaped.

The rear edge of the trapezoid-shaped guiding surface is thus shorter than the front edge of said surface, said edges being substantially parallel to one another.

Means defining guide bearings are provided on the first and second side plates 13*a* and 13*c*, including runners or upstanding bearing lugs 21 and traction slides or cylindrical bearing blocks 14. Bearing blocks 14 are interconnected by a traction reinforcing means 25, which is shown in dash line meant to represent a cable, chain, or other similar device. Along the central portion of the traction reinforcing means, a magnet element, such as a permanent magnet, is disposed. By placing a suitable magnetically actuated switch at either end of the path of travel of the planer arrangement along the mine face, once the magnet 26 passes thereby, such magnetic switch may be actuated to reverse the direction of drive of the traction cable means used to propel or pull the planer arrangement along its course. Magnetically actuated switching means are well known and any type which is commercially available may be used. Naturally, such magnetically operated switching means must be connected with the driving means for the traction cable means to reverse the direction of operation. It will be appreciated, in this connection, that the traction cable means may be of the conventional type, i.e. a cable looped over a pair of spaced apart driving wheels and attached at the ends to the traction slides or cylindrical bearing blocks 14 at eyes 24.

Upstanding lugs 21 may be equipped with auxiliary cutting means in order to ensure the complete extraction of mineral from the mine face together with the extraction occasioned by the cutters to be carried by cutter carrier 12.

Auxiliary cutters 21*a* are actually provided on the underside of plates 13*a* and 13*c*, respectively, and connected therethrough by screws 21*b* which in turn connect lugs 21 therewith. While the traction cable means and the drive means therefor are not shown in the drawing, these elements are conventional and are employed in the conventional manner.

FIG. 2 shows the planer arrangement with the guiding channel formed by the upstanding lugs 21, on one lateral side, traction slides or cylindrical blocks 14, on the opposite lateral side, the guiding surface formed by plates 13*a*, 13*b*, and 13*c* on the bottom, and the inward projection of cutter carrier 12 on the top, in relation to the conveyor 10 may be made of interlocking sections 10', 10'', etc. for accommodating the unevenness of the mine seam being extracted. Conveyor 10 includes the rear longitudinal rail 10*a* and the front longitudinal rail 10*b* interconnected by the conveyor floor 10*c*. Conveyor 10 may be of the usual double chain scraper conveyor type wherein a pair of parallel chains interconnected by scraper bars spaced from one another along the extent of the conveyor is contemplated, the forward chain passing along the respective rail above floor 10*c* and the return portion passing below floor 10*c*.

In FIG. 2 and FIG. 4, it is seen that the conveyor 10 is disposed over the plate portion extending away from mine face side at which the planer 11 is directed, conveyor 10 being situated in the guiding channel formed by plates 13*a*, 13*b*, and 13*c* on the bottom, (FIG. 2), the

projection of cutter carrier 12 on the top, and lugs 21 on one lateral side and cylindrical blocks 14 on the other lateral side. Conveyor 10 is provided on the side remote from the planer 11 with a shield plate 20 attached to longitudinal rail 10*b* and extending thereabove a certain distance. Groove elements 16 are disposed on the outer side of shield plate 20 in spaced relation along the longitudinal extent of conveyor 10. Channel 15 is defined in the under side of groove element 16 for sliding engagement with cylindrical bearing block 14 of the planer arrangement and for passage therealong of the traction cable means attached to eyes 24, (FIG. 2), said traction cables means not being shown. A similar groove is provided on the top of groove element 16 for the pasasge of the return portion of the traction cable means along upward channel 15' in a compact manner. Channel plate 17 connected to shield plate 20 by pins 18 (FIG. 4) is provided for covering the moving parts, including the traction cable means and the cylindrical bearing blocks, on the side of conveyor 10 remote from the mine face side.

As may be seen in FIG. 3, channel plate 17 is provided with a U-shaped cross section and contains ends 23 of greater thickness for adequate reinforcement purposes. Pins 18 are provided at the two upper corners of channel plate 17 for engagement with apertures 19 (see FIG. 2) in shield plate 20. Of course, the central longitudinal portion of channel plate 17 may be conveniently attached to the outer surface of groove elements 16 so as to compactly contain the moving parts in covered condition thereunder.

As may be seen in FIG. 2 and FIG. 4 when channel plate 17 is in position against shield plate 20, a lower channel 15 is defined below groove element 16 while an upward channel 15' is defined for the return of the reaction cable means (not shown), channel 15 being provided for passage of the cylindrical bearing blocks in the desired manner as well as the intermediate traction reinforcing means carrying the magnetic element 26 and the driving portion of the traction cable means attached to the eyes 24.

Thus, the construction in accordance with the present invention may be used advantageously for the extraction of coal, especially in the mining of hard and thin-seams with a coal planer driven or pulled back and forth along the mine face by means of a traction mechanism in conjunction with a conveyor installation, such as a double chain scraper conveyor, for the removal of coal which has been extracted from the mine face by the planer. By reason of the flexible connections between the three plates underlying the conveyor, the coal planer may follow the course of the curves of the wavy or undulating horizontal seams for the efficient mining of coal, the traction or pulling means for the planer being positioned at the side of the conveyor remote from the mine face.

As aforesaid, the runners or lugs 21 may carry cutting tools for engaging the mine face, such tools preferably being arranged at an angle to the horizontal seam. Such cutting tools 21*a* may be conveniently attached with the runners or lugs, if desired, indirectly through the corresponding plate situated therebetween with the aid of screws, bolts, etc., 21*b*. The traction slides or cylindrical bearing blocks, on the other hand, may be provided with a bore hole therethrough for carrying a chain pin upon which the traction cable may be fastened at one end and upon which the traction reinforcing means may be fastened at the other end. The traction reinforcing means is in the nature of a distance traction mechanism whereby the tractive force of the traction cable means is distributed from one end of the trapezoid-shaped guiding surface to the other, without undue stress on the hinged connections. Of course, while the channel plates 17 serve to cover the channels 15 and 15', sufficient space is provided between the lower edge of channel plate 17 and the adjacent portion of longitudinal conveyor rail 10*b* to permit the cylindrical bearing blocks 14 attached to the side plates 13*a* and 13*c* to pass therealong unhindered. By reason of the pins 18 and the bore holes 19 in shield plate 20, channel plates 17 may be removed readily to permit adjustments, repairs, etc. of the moving elements which are covered thereby.

In operation, by reason of the runners or lugs 21, any rebound forces which result as a consequence of the tendency of the planer 11 to move out of its normal position where the same encounters a particularly resistant portion in the mine face will be completely offset, while the traction cable continues to pull or force traction slides or cylindrical bearing blocks 14 in the direction of movement. Were it not for the runners or lugs 21, a certain rotation of planer 11 might occur which would be detrimental to the normal mining action. It will be realized that in the embodiment according to the invention, the traction cable is connected to the planer arrangement at a point spaced from the planer itself whereby such rotation tendency might arise. This is completely offset by reason of the particular presence of the runners or lugs 21 in conjunction with the longitudinal rear rail 10*a* which tends to maintain the planer arrangement along its true course.

What is claimed is:

1. Planer arrangement adapted to be conducted in even and uneven horizontal direction along a mine face for extraction of mineral therefrom by engagement of the planer therewith, which comprises a central planer plate having a longitudinal axis and having a planer situated substantially centered thereon for extractive engagement with a mine face, a first side plate and a second side plate attached pivotally to opposite sides respectively of said planer plate about a corresponding substantially horizontal axis of pivot substantially transverse to said longitudinal axis, and means defining guide bearings on said first and second side plates, said plates and guide bearing means together defining a guiding channel for traveling engagement with a conducting rail means disposed thereover for travel along the mine face, in even and uneven horizontal direction depending on the nature of the mine seam while under the tractive force of traction means attached to the side plates at the corresponding portions thereof remote from the mine face, with the planer in extractive engagement with the mine face without deviation of the planer from the normal position of travel even under the resistance of the mine face to said planer.

2. Arrangement according to claim 1 wherein said guide bearing means include a runner and an opposing traction slide on each side plate, correspondingly positioned on opposite sides of said guiding channel to define respective portions of said guiding channel with the corresponding plates.

3. Arrangement according to claim 2 wherein said side plates are hingedly connected to said planer plate about said corresponding horizontal axes of pivot for forming a trapezoid shaped guiding surface having a shorter rear edge and a longer front edge substantially parallel to said rear edge, with the runners and planer positioned thereon along said shorter rear edge and the traction slides positioned thereon along said longer front edge to define therebetween said guiding channel, a projection inwardly extending over a portion of the guiding channel to define the upward limit thereof with respect to traveling engagement with a conducting rail means while the trapezoid shaped guiding surface defines the lower limit thereof.

4. Arrangement according to claim 3 wherein each runner is positioned on the respective side plate at the corresponding rear edge corner portion of the trapezoid shaped guiding surface, and each traction slide is positioned on the respective side plate at the corresponding front edge corner portion of said guiding surface, the distance between said traction slides being greater than the distance between said runners, said runners being substantially equidistantly spaced from said planer and said traction slides being substantially equidistantly spaced from said planer, a traction reinforcing means intercon-

necting said traction slides to take up tractive forces exerted on the planer arrangement, and on the hinge connections of the side plates and the planer plate, which tractive forces are exerted for conducting the planer along the mine face in extractive engagement therewith.

5. Arrangement according to claim 4 wherein traction cable means are correspondingly connected to said traction slides for conducting under tractive force said planer arrangement in both directions of travel, respectively, along said mine face.

6. Arrangement according to claim 5 wherein each runner is an upstanding bearing lug carrying an auxiliary cutter thereon for engagement with the mine face, and each traction slide is a cylindrical bearing block extending in the direction of said front edge and outwardly thereof, the cylindrical blocks being interconnected by said traction reinforcing means, and each block having attachment means for corresponding attachment with said traction cable means.

7. Arrangement according to claim 6 in combination with a rail conducting means, wherein said conducting rail means defining a longitudinal conveyor for removing extracted mineral, said conveyor having a rear longitudinal rail and a front longitudinal rail interconnected by a central conveyor floor, said rear rail being in sliding engagement with said bearing lugs and upwardly limited by said projection inwardly extending thereover, both rails being in sliding engagement with said plates thereunder, and said front rail being in sliding engagement with said cylinder blocks.

8. Arrangement according to claim 7 wherein said front rail is provided with an upwardly extending shield plate to prevent overflow of mineral from said conveyor, groove means being disposed on the outer side of said shield plate for sliding engagement with said cylindrical blocks.

9. Arrangement according to claim 8 wherein said groove means include a lower groove for engagement with said cylindrical blocks and for passage therealong of said traction cable means connected to said blocks, and an upper groove for the return portion of the traction cable means, and channel plates disposed on said shield plate and connected to said groove means for covering said grooves.

10. Planer arrangement adapted to be conducted in even and uneven horizontal direction along a mine face for extraction of mineral therefrom by engagement of the planer therewith, which comprises a central plate having a longitudinal axis, a first lateral plate pivotally connected to one lateral side of said central plate about a first horizontal axis of pivot transverse to said longitudinal axis, a second lateral plate pivotally connected to the opposite lateral side of said central plate about a second horizontal axis of pivot transverse to said longitudinal axis, said plates together forming a longitudinally extending flexible guiding surface having a rear longitudinal side adapted to be conducted adjacent to the mine face and a front longitudinal side remote therefrom, a planer situated substantially centered on said central plate at said rear longitudinal side, a runner situated on each lateral plate at said rear longitudinal side, a traction slide situated on each lateral plate at said front longitudinal side, and a traction reinforcing cable interconnecting said traction slides in the longitudinal direction of said flexible guiding surface, said runners, plates, and traction slides together defining a guiding channel for engagement with a conducting rail means disposed thereover and received in said guiding channel for travel along a mine face in even and uneven horizontal direction depending on the nature of the mine seam while under the tractive force of traction means attached to the corresponding traction slides at said front longitudinal side, with the planer in extractive engagement with the mine face without deviation of the planer and guiding channel from the normal longitudinal position which is caused by resistance of the mine face to said planer.

11. Planer arrangement adapted to be conducted in even and uneven horizontal direction along a mine face for extraction of mineral therefrom by engagement of the planer therewith which comprises in combination, a rectangular longitudinally extending central plate having a rear, front, and two lateral edges, a planer situated substantially centered on said central plate at said rear edge and having cutting means for extractive engagement with a mine face and a projection inwardly extending over the central plate, a first and a second side plate attached by a hinge connection to opposite lateral sides respectively of said central plate, said hinge connection having a horizontal axis of pivot substantially transverse to the longitudinal axis of said central plate, said first, central and second plates being disposed in tandem in longitudinal direction and forming a trapezoid shaped guiding surface having a shorter rear edge on the side corresponding to said central plate rear edge and a longer front edge on the side corresponding to said central plate front edge, said front and rear edges being parallel, an upstanding bearing lug carrying an auxiliary cutter thereon for engagement with the mine face being disposed on each side plate at the corresponding rear edge corner portion of the trapezoid shaped guiding surface, a cylindrical bearing block being disposed on each side plate at the corresponding front edge corner portion of the trapezoid shaped guiding surface and extending in the direction of said front edge and outwardly thereof, the distance between said blocks being greater than the distance between said lugs, a traction cable means correspondingly connected to said blocks for conducting under tractive force, said planer arrangement in both directions of travel, respectively, along the mine face, a traction reinforcing means interconnecting said bearing blocks to take up tractive forces exerted on the planer arrangement and on the hinge connections, said bearing lugs, bearing blocks, plates and planer projection together defining a guiding channel upwardly limited by said projection, downwardly limited by said trapezoid shaped guiding surface and laterally limited by said lugs on the one hand and said blocks on the other, a longitudinal conveyor for removing extracted mineral, said conveyor having a front and rear longitudinal rail interconnected by a central conveyor floor, said conveyor being disposed over said guiding channel for traveling engagement of said guiding channel therewith during travel of said planer arrangement along the mine face, in even and uneven horizontal direction depending on the nature of the mine seam, with the planer in extractive engagement with the mine face without deviation of the planer from the normal position of travel under the resistance of the mine face to said planer, the rear rail of said conveyor being in sliding engagement with said lugs and upwardly limited by said projection inwardly extending thereover, both rails being in sliding engagement with said plates thereunder, and said front rail being in sliding engagement with said cylindrical blocks.

12. Arrangement according to claim 11 wherein said front rail is provided with an upwardly extending shield plate to prevent overflow of mineral from said conveyor, groove means being disposed on the outer side of said shield plate, said groove means having a lower groove for sliding engagement with said cylindrical blocks and for passage therealong of said traction cable means connected to said blocks, and an upper groove for the return portion of the traction cable means, and channel plates being disposed on said shield plate and connected to said groove means for covering said grooves.

References Cited in the file of this patent

UNITED STATES PATENTS

2,745,651	Herrmann	May 15, 1956
2,823,908	Rosler	Feb. 18, 1958

FOREIGN PATENTS

568,766	Belgium	July 15, 1958