Jan. 26, 1960 S. WERNER 2,922,169

PLAYPEN

Filed Dec. 9, 1957

Fig. 1.

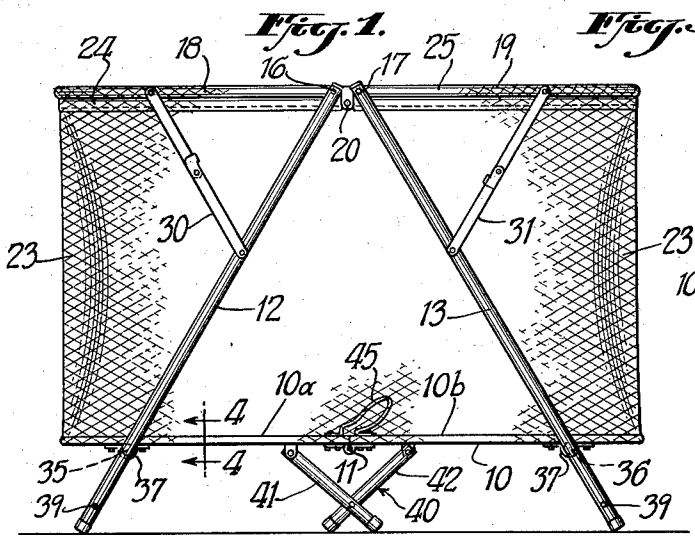

Fig. 3.

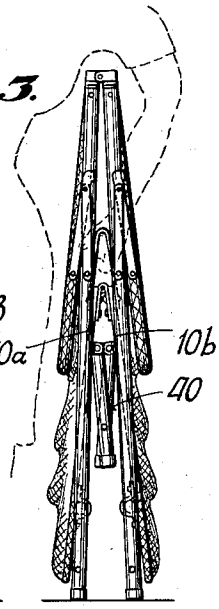

Fig. 2.

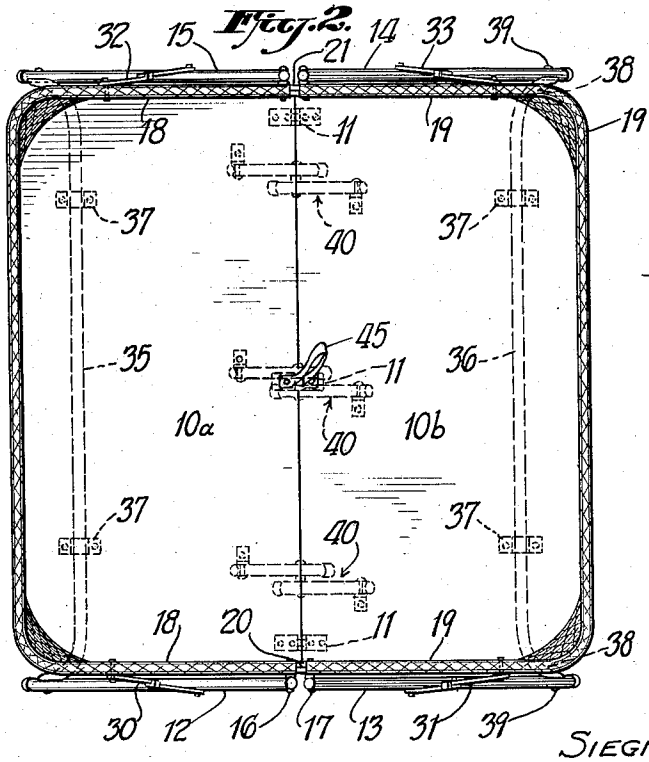

Fig. 4.

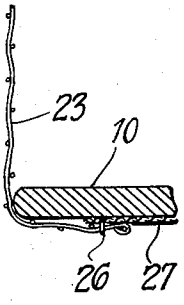

INVENTOR.
SIEGMUND WERNER.
BY
Ward Neal Haselton Dunn & McElhannon
ATTORNEYS.

United States Patent Office 2,922,169
Patented Jan. 26, 1960

2,922,169

PLAYPEN

Siegmund Werner, South Orange, N.J., assignor to Deeco Incorporated, Bloomfield, N.J., a corporation of New Jersey

Application December 9, 1957, Serial No. 701,653

3 Claims. (Cl. 5—98)

This invention relates to a portable playpen construction of a type adapted to be quickly and easily collapsed or folded into a compact condition for convenient storage or carrying from one place to another.

While a variety of types of foldable playpen constructions have heretofore been devised, in the usual case such constructions are relatively heavy and awkward to carry and the setting up or collapsing of same usually involves a somewhat complicated series of manipulations, and with the possibility of pinching the user's fingers in the various parts or of breakage of the parts if same are not manipulated in exactly the intended manner.

The present invention provides a construction avoiding the above mentioned difficulties and the arrangement being such that the whole structure may be collapsed or folded into position for easy carrying away by substantially a single movement, that is, according to an important aspect of the invention, the playpen has a bottom or floor area formed of two parts hingedly secured together along a median vertical plane. A supporting collapsing frame structure is provided for such floor as well as for a peripheral fencing arrangement for the pen, all so arranged so that one may grasp a handle or pull tab at the middle portion of the floor area and upon applying an upward pulling force the entire playpen will become immediately collapsed in a condition for ready carrying away, generally without any further manipulation.

Various further and more specific objects, features and advantages of the invention will appear from the description given below, taken in connection with the accompanying drawings, illustrating by way of example a preferred form of the invention.

In the drawings:

Fig. 1 is an end elevational view of the presently preferred embodiment of the invention;

Fig. 2 is a top plan view;

Fig. 3 is an end elevational view showing the structure in collapsed condition and being ready to be carried as shown by the user; and

Fig. 4 is a sectional view showing certain details.

Referring to the drawings in further detail, the playpen as best shown in Figs. 1 and 2, comprises a floor **10** made of two parts **10***a* and **10***b* of plywood or other sheet material, these parts being hinged together as by hinges **11**, the hinge line running horizontally preferably substantially midway between the two sides of the pen.

A supporting frame is provided preferably largely formed of tubular metal material, for example aluminum tubing, there being four main supporting legs, as indicated at **12, 13, 14** and **15**, the legs of each pair normally converging and being pivotally connected as at **16** and **17**, respectively, to two top rails **18** and **19** for the pen. Each of these top rail sections extends halfway around the periphery of the pen and their ends respectively are pivoted together as at **20** and **21**.

The side wall portions as at **23** of the pen may be comprised of a single area of fabric or suitable open-mesh webbing made of nylon or other suitable strong material.

The upper edges of such webbing may be sewn, adhered or otherwise secured to plastic coverings as at **24, 25** encircling the top rail portions. The lower portions of such webbing may extend as shown in Fig. 4, around and under the floor area where such edges are sewn, adhered or otherwise secured as at **26** to an area of cloth **27**, if desired, which may be used to cover the bottom surface portions of the floor.

In order to support the rail portions **18** and **19**, knuckle-like pivotable supporting connections may be provided as at **30, 31, 32** and **33**, each of these having their lower ends pivotally connected to one of the frame legs and their upper ends pivotally connected to one of the rails **18** or **19**.

As further shown in Figs. 1 and 2, supporting legs **12** and **15** are connected as a pair by a strut as at **35** extending along beneath floor portion **10***a*, and supporting legs **13** and **14** are interconnected by a similar strut **36** extending along beneath floor portion **10***b*. These struts may be in effect rotatably connected to the floor portions as by cleats **37**. The ends of each strut as at **38** extend outwardly and downwardly and terminate in a riveted connection as at **39** to the adjacent lower portion of a leg.

In order to support the midportion of the floor area at a predetermined position above the floor and to prevent weight on the floor areas from breaking the hinges at **11**, there may be provided a plurality of short collapsible supporting structures, one of which is indicated generally at **40** in Fig. 1. Each of these may comprise two tubular leg portions as at **41, 42** pivotally connected in an X-formation intermediate their length and with their upper ends pivotally connected to the underside of the floor as indicated.

In order to collapse the structure as shown in Figs. 1 and 2, to secure a relationship of the parts as shown approximately in Fig. 3, one may first inspect the knuckle-like connections **30, 31, 32** and **33** and make sure that they are biased slightly in a direction to permit folding and then it is simply necessary for the user to grasp a handle or strap as indicated at **45** in the middle of the floor area and pull upwardly. Thereupon the entire structure will all automatically collapse with the parts assuming the relationship shown in Fig. 3 and the user may continue to hold on to the strap or handle **45** for conveniently carrying the structure away without any further manipulations. In this condition it will be noted that the supporting legs will have been brought closely together and that the rail portions or members **18** and **19** will have become swung downwardly into generally parallel relationship to the supporting legs whereas the small floor supporting leg structures **40** will have become collapsed, as indicated, in between the now collapsed opposed portions **10***a* and **10***b* of the floor.

On occasion, it may be desired to lower only one or the other of the rail portions **18** or **19**, so as to permit anyone to have easy access into the playpen or even to permit a child to step into the playpen without being lifted. In such event, this result may be readily accomplished by first putting two of the knuckle-like connecting means, for example **31** and **33**, into condition so that they will not be biased against folding, whereupon the rail portion **19** may be swung down so that its outer portion will be fairly close to the floor, thus giving easy access into and out of the pen.

Although a certain particular embodiment of the invention is herein disclosed for purposes of explanation, further modifications thereof, after study of this specification, will be apparent to those skilled in the art to which the invention pertains. Reference should accordingly be had to the appended claims in determining the scope of the invention.

What is claimed and desired to be secured by Letters Patent is:

1. A collapsible playpen construction comprising in combination: a floor comprised of two parts hingedly secured together along a dividing line extending along the mid-portion thereof; collapsible fencing extending upwardly from the borders of said floor when the playpen is in set-up condition; collapsible leg means supporting the fencing means hingedly secured at their upper ends with respect to each other and diverging downwardly and outwardly from said upper ends beyond said floor, said collapsible leg means being secured to said floor parts respectively for supporting the same remote from said dividing line; said construction being collapsible upon lifting the hinged mid-portion of said floor; and additional collapsible supporting means for supporting said floor parts adjacent said dividing line when said playpen is in set-up condition, said additional supporting means comprising supporting structures pivotally connected together intermediate their ends and with their upper portions pivotally connected respectively to the undersides of the two floor parts adjacent said dividing line whereby to support said floor parts adjacent said dividing line when the playpen is set up and to fold together relatively to one another when said playpen is collapsed.

2. A collapsible playpen construction comprising in combination: a floor comprised of two parts hingedly secured together along a dividing line extending along the mid-portion thereof; collapsible fencing extending upwardly from the borders of said floor when the playpen is in set-up condition; collapsible leg means supporting the fencing means hingedly secured at their upper ends with respect to each other and diverging downwardly and outwardly from said upper ends beyond said floor, said collapsible leg means being secured to said floor parts respectively for supporting the same remote from said dividing line; said construction being collapsible upon lifting the hinged mid-portion of said floor; and additional collapsible supporting means for supporting said floor parts adjacent said dividing line when said playpen is in set-up condition, said additional supporting means comprising pairs of supporting legs, the legs of each pair being pivotally connected together intermediate their ends and with their upper portions pivotally connected respectively to the undersides of the two floor parts adjacent said dividing line whereby to support said floor parts adjacent said dividing line when the playpen is set up and to pivot towards one another about said pivotal connection therebetween when said playpen is collapsed.

3. A collapsible playpen construction comprising in combination: a floor comprised of two parts hingedly secured together along a dividing line extending along the mid-portion thereof; collapsible fencing extending upwardly from the borders of said floor when the playpen is in set-up condition; collapsible leg means supporting the fencing means hingedly secured at their upper ends with respect to each other and diverging downwardly and outwardly from said upper ends beyond said floor, said collapsible leg means being secured to said floor parts respectively for supporting the same remote from said dividing line; said construction being collapsible upon lifting the hinged mid-portion of said floor; and additional collapsible supporting means for supporting said floor parts adjacent said dividing line when said playpen is in set-up condition, said additional supporting means comprising at least one pair of legs, each leg of each pair being pivotally connected respectively to one of said floor parts adjacent said dividing line and being inclined downwardly through a vertical plane passing through said dividing line when said playpen is set up, the legs of each such pair being connected by a pivot in said plane and which pivot is fixed relatively to said legs, whereby the free ends of said legs rest on a supporting surface to support said floor parts adjacent said dividing line when the playpen is set up, said legs rotating about said pivot towards one another to nest between the floor parts when said playpen is collapsed.

References Cited in the file of this patent

UNITED STATES PATENTS

461,691	Trenholme	Oct. 20, 1891
609,520	De Von	Aug. 23, 1898
1,429,335	Gabriel	Sept. 19, 1922
2,533,970	Sole	Dec. 12, 1950
2,553,703	Ebersole	May 22, 1951
2,710,976	Martensen	June 21, 1955
2,783,053	Sheldrick	Feb. 26, 1957

FOREIGN PATENTS

3,332	Great Britain	1883
19,252	Great Britain	1892
29,125	Sweden	July 9, 1910
182,631	Great Britain	July 13, 1922
640,023	France	Mar. 19, 1929
958,555	France	Sept. 12, 1949