J. N. LAWRENCE.

BASE BALL PITCHER'S TARGET.

APPLICATION FILED JUNE 2, 1914.

1,142,184.

Patented June 8, 1915.

Fig. 1.

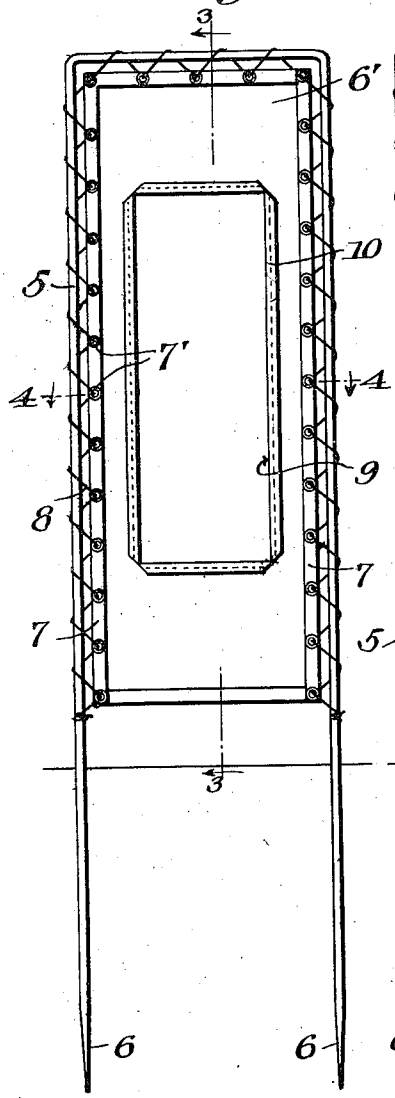

Fig. 2.

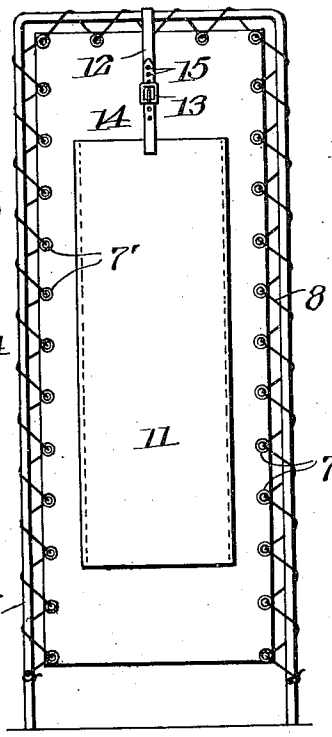

Fig. 3.

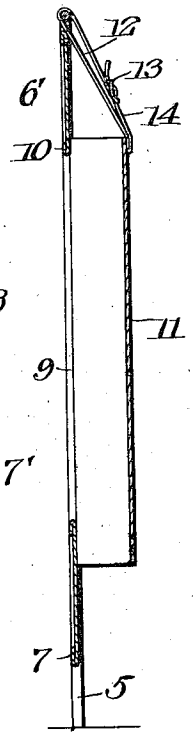

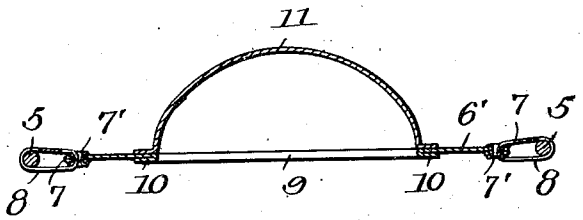

Fig. 4.

Inventor

J. N. Lawrence

By Victor J. Evans

Attorney

Witnesses

Hugh H. Hott

L. O. Parker.

UNITED STATES PATENT OFFICE.

JOHN N. LAWRENCE, OF LAS ANIMAS, COLORADO.

BASE-BALL-PITCHER'S TARGET.

1,142,184. Specification of Letters Patent. Patented June 8, 1915.

Application filed June 2, 1914. Serial No. 842,456.

To all whom it may concern:

Be it known that I, JOHN N. LAWRENCE, a citizen of the United States, residing at Fort Lyon, Las Animas, in the county of Bent and State of Colorado, have invented new and useful Improvements in Base-Ball-Pitchers' Targets, of which the following is a specification.

The invention relates to a target, and more particularly to the class of baseball pitchers' targets.

The primary object of the invention is the provision of a target wherein the accuracy in the throwing of a baseball can be readily ascertained, and thereby enabling a pitcher to practise the art of throwing the ball through and with accuracy relative to a home plate and a diamond used for base-ball games, the target being of novel form and will enable a pitcher to gain control of the ball and to become skilled in the pitching art.

Another object of the invention is the provision of a target of this character which is rendered portable, strong, durable, reliable and efficient in its purpose, and inexpensive in manufacture.

With these and other objects in view, the invention consists in the construction, combination and arrangement of parts as will be hereinafter more fully described, illustrated in the accompanying drawing, and pointed out in the claim hereunto appended.

In the drawing:—Figure 1 is a front elevation of a target constructed in accordance with the invention. Fig. 2 is a rear elevation thereof. Fig. 3 is a sectional view on the line 3—3 of Fig. 1. Fig. 4 is a sectional view on the line 4—4 of Fig. 1.

Similar reference characters indicate corresponding parts throughout the several views in the drawing.

Referring to the drawing in detail, the target comprises an inverted substantially U-shaped metallic supporting frame 5, preferably made from a circular shaped metal bar bent into the required shape, the ends of the limbs of the frame being formed with points 6 which permit the driving thereof into the ground for the anchoring of the frame in vertical position.

When anchoring the frame in the ground the same is positioned the desired height relative to the surface of the ground. Detachably hung upon or carried by the frame is a target body comprising a canvas sheet 6 having a reinforced marginal edge 7, and arranged in the sides and top reinforced edges of this sheet 6 are spaced eyelets 7 through which is trained a cable or rope 8 which is wrapped about the frame 5 for the fastening of the sheet 6 therein and the stretching of the same taut when mounted upon the frame. The ends of the cable or rope 8 may be fastened in any suitable manner. Formed centrally within the sheet 6 is a rectangular shaped opening 9, the edges of which are lapped and stitched as at 10 for reinforcing the same, and through this opening 9 is adapted to pass the ball thrown by the pitcher. The opening 9 is of a height approximately two and one-third greater than its width to enable the proper judging of balls and strikes during the use of the target. Should the ball pass through the opening 9 when thrown by the pitcher it indicates a "strike." Now, should the ball fail to pass through the opening 9 when thrown by the pitcher and strike the canvas sheet 6 at either side of the opening or above or below the same it indicates what is termed in a baseball game a "ball," so that the pitcher can acquire perfect control and can accurately determine such control by the use of the target when throwing the base ball in practice.

Arranged at the rear of the target is a screen 11, preferably made from canvas, the opposite longer edges of which are stitched or otherwise secured to the rear face of the sheet 6 at opposite sides of the opening 9 therein, while at the uppermost edge of this screen is secured a strap 12 having at one end a buckle 13, while its opposite free end 14 is formed with holes 15 for adjustable connection with the buckle 13, the straps being passed around the top of the frame 5, and in this manner the screen 11 is prevented from sagging and is firmly held. The purpose of the screen 11 is to deflect the ball toward the ground after passing through the opening 9 and to impede the speed of the ball so that the same will not roll a great distance from the target, thus enabling the same to be quickly and conveniently collected after being thrown or pitched by the pitcher while practising the art of pitching. In other words, the ball after being thrown through the opening 9 is pocketed so that it will drop upon the ground at the point of the target, it being understood that the lowermost end of the

screen is free or unattached to the sheet 6 of the target so that the balls will drop between the screen and the sheet after passing through the opening therein.

From the foregoing it is thought that the construction and manner of use of the device will be clearly understood, and therefore a more extended explanation has been omitted.

What is claimed is:—

In a target, a vertically disposed inverted substantially U-shaped support, a flexible sheet stretched taut upon said support and having an opening, the height of which is approximately two and one-third greater than its width, a screen arranged rearwardly of the opening to form a back stop and disposed parallel to said sheet and connected thereto for deflecting baseballs passing through the opening toward the ground, and means for fastening the sheet to the support and sustaining it taut.

In testimony whereof I affix my signature in presence of two witnesses.

JOHN N. LAWRENCE.

Witnesses:

ARTHUR H. LEHMAN,

F. J. MORASKA.